Table of Contents

Section Code	Section	Page Number
1	Important Safety Instructions	2
1	Safety Warning Labels and Serial Number	3
1	Reading the Product Specification Label	3
1	Specifications	3
1	Maintenance	4
1	Moving the Machine	5
1	Leveling the Machne	5
1	USB Charging	6
1	Troubleshooting	7
1	Console Service Mode	9
1	Maintenance Parts Exploded View	12
1	Replacement Procedure Skill Level	13
	Mechanical Procedures	14
2	Belt Tension Adjustment	14
3	Setting the Brake Tension (Calibration)	17
	Part Replacement	20
4	Console	20
5	Pedals	22
6	Crank Arms	24
7	Transport Wheels	28
8	Shrouds	30
9	Console Mast (Upright Handlebar Assembly)	35
10	Data Cable in the Mast	37
11	Heart Rate Cable in the Mast	40
12	Seat Rail Assembly	43
13	Brake Assembly	48
14	Servo Motor	51
15	Drive Belt and Flywheel Assembly	54
16	Belt Tensioner Assembly (Idler Assembly)	57
17	Drive Pulley (Crank Assembly)	59
18	RPM Sensor (Speed Sensor)	62
19	Power Inlet	64

Nautilus, Inc., (800) NAUTILUS / (800) 628-8458, www.NautilusInc.com - Customer Service: North America (800) 605-3369, csnls@nautilus.com | outside U.S. www.nautilusinternational.com | © 2016 Nautilus, Inc. | Schwinn, the Schwinn Quality logo, Schwinn 270, and Nautilus are trademarks owned or licensed by Nautilus, Inc., registered or otherwise protected by common law in the United States and other nations. Polar® and OwnCode® are trademarks of their owner. The Bluetooth® word mark and logos are registered trademarks owned by Bluetooth SIG, Inc., and any use of such marks by Nautilus, Inc. is under license.

ORIGINAL DOCUMENT - ENGLISH VERSION ONLY

8014250.030123.C

NOTICE: This document provides important safety instructions, adjustments, and general troubleshooting information for the maintenance of the Schwinn™ 270 (Model Year 2017) Recumbent Bike.

If you need assistance, please contact Customer Service (if purchased in US/Canada) or your local distributor (if purchased outside US/Canada). To find your local distributor, go to: www.nautilusinternational.com

This icon means a potentially hazardous situation which, if not avoided, could result in death or serious injury. Read and understand all Warnings on this machine.

Nautilus, Inc., (800) NAUTILUS / (800) 628-8458, www.NautilusInc.com - Customer Service: North America (800) 605-3369, csnls@nautilus.com | outside U.S. www.nautilusinternational.com | © 2016 Nautilus, Inc. | Schwinn, the Schwinn Quality logo, Schwinn 270, and Nautilus are trademarks owned or licensed by Nautilus, Inc., registered or otherwise protected by common law in the United States and other nations. Polar® and OwnCode® are trademarks of their owner. The Bluetooth® word mark and logos are registered trademarks owned by Bluetooth SIG, Inc., and any use of such marks by Nautilus, Inc. is under license. | **ORIGINAL DOCUMENT - ENGLISH VERSION ONLY**

Important Safety Instructions

This icon means a potentially hazardous situation which, if not avoided, could result in death or serious injury. Read and understand all Warnings on this machine.

Before servicing or using this equipment, obey the following warnings:

Read and understand the Service Manual before working on the machine. Failure to obey the instructions and safety warnings could cause injury to the service technician or bystanders.

- Keep bystanders and children away from the product being serviced at all times.
- Make sure that the repair is done in an appropriate work space away from foot traffic and exposure to bystanders.
- Some components of the equipment can be heavy or awkward. Enlist the service of a second person when you do maintenance steps involving these components. Do not try to do heavy or awkward steps on your own.
- If replacement parts are necessary, use only genuine replacement parts and hardware supplied by Nautilus. Failure to use genuine replacement parts can cause a risk to users, keep the machine from operating correctly and void the warranty.
- Be sure that all warning stickers and instructional placards applied to the product stay present and in good condition when doing maintenance or replacing components. If at any time the Warning labels become loose, unreadable or dislodged, replace the labels. If purchased in US/Canada, contact Customer Service for replacement labels. If purchased outside US/Canada, contact your local distributor for them.
- Do not try to change the design or functionality of the machine being serviced as this can adversely affect user safety.
- Do not put the machine back in service until all shrouds, instructions, warning labels and correct functionality have been verified and tested for correct performance.

SAVE THESE INSTRUCTIONS.

Safety Warning Labels and Serial Numbers

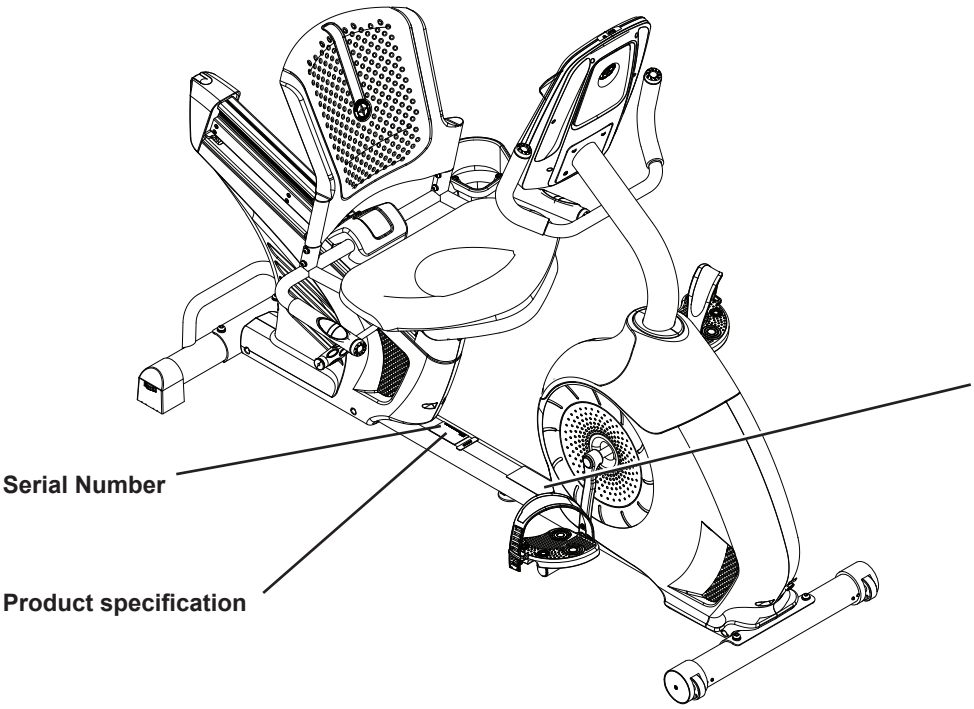

WARNING!

- **Injury or death is possible if caution is not used while using this machine.**
- **Keep children and pets away.**
- **Read and follow all warnings on this machine.**
- **Refer to the Owner's Manual for additional warnings and safety information.**
- **The heart rate displayed is an approximation and should be used for reference only.**
- **Not intended for use by anyone under 14 years of age.**
- **The maximum user weight for this machine is 300 lbs (136kg).**
- **This machine is for home use only.**
- **Consult a physician prior to using any exercise equipment.**

(The label on the machine is available in English and French Canadian only.)

Reading the Product Specification Decal
The Manufacture Date on the Product Specification Decal is a date code: YY/WW (year/week).

Manufacture Date Code: YYWW

Specifications

Maximum User Weight: 136 kg (300 lb)
Total Surface Area (footprint) of equipment: 11,424 cm^2 (1770.7 in^2)
Machine Weight: 39.3 kg (86.6 lb)

Power Requirements (AC Adapter):
Input Voltage: 100 - 240V AC, 50/60Hz, 0.4A
Output Voltage: 12V DC, 3A

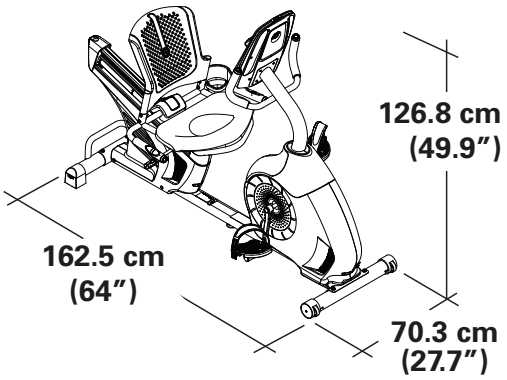

This product complies with the European Radio Equipment Directive 2014/53/EU.

FCC Compliance

⚠ Changes or modifications to this unit not expressly approved by the party responsible for compliance could void the user's authority to operate the equipment.

The machine and power supply comply with part 15 of the FCC rules. Operation is subject to the following two conditions: (1) This device may not cause harmful interference, and (2) this device must accept any interference received, including interference that may cause undesired operation.

Note: This machine and power supply have been tested and found to comply with the limits for a Class B digital device, pursuant to Part 15 of the FCC Rules. These limits are designed to provide reasonable protection against harmful interference in a residential installation. This equipment generates, uses and can radiate radio frequency energy and, if not installed and used in accordance with the instructions, may cause harmful interference to radio communications.

However, there is no guarantee that interference will not occur in a particular installation. If this equipment does cause harmful interference to radio or television reception, which can be determined by turning the equipment off and on, the user is encouraged to try to correct the interference by one or more of the following measures:

- Reorient or relocate the receiving antenna.
- Increase the separation between the equipment and receiver.
- Connect the equipment into an outlet on a circuit different from that to which the receiver is connected.
- Consult the dealer or an experienced radio/TV technician for help.

Maintenance

Read all maintenance instructions fully before you start any repair work. In some conditions, an assistant is necessary to do the necessary tasks.

⚠ **Equipment must be regularly examined for damage and repairs. The owner is responsible to make sure that regular maintenance is done. Worn, damaged or loose components must be repaired or replaced immediately. Only manufacturer supplied components can be used to maintain and repair the equipment.**

If at any time the Warning labels become loose, unreadable or dislodged, replace the labels. If purchased in US/Canada, contact Customer Service for replacement labels. If purchased outside US/Canada, contact your local distributor for them.

Disconnect all power to the machine before you service it.

Daily:

Before each use, examine the exercise machine for loose, broken, damaged, or worn parts. Do not use if found in this condition. Repair or replace all parts at the first sign of wear or damage. Check Pedals and tighten as needed. After each workout, use a damp cloth to wipe your machine and Console free of moisture.

Note: Avoid excessive moisture on the Console.

NOTICE: If necessary, only use a mild dish soap with a soft cloth to clean the Console. Do not clean with a petroleum based solvent, automotive cleaner, or any product that contains ammonia. Do not clean the Console in direct sunlight or at high temperatures. Be sure to keep the Console free of moisture.

Weekly:

Check pedals and crank arms and tighten as necessary.

⚠ **Do not back, or reverse, pedal. Doing so may loosen the Pedals, which could result in damage to the machine and/or injury to the user. Never operate this machine with loose Pedals**

Clean the machine to remove any dust, dirt, or grime from the surfaces. Check for smooth seat slider operation. If needed, apply a very thin coating of 100% silicone lubricant to ease operation.

⚠ **Silicone lubricant is not intended for human consumption. Keep out of reach of children. Store in a safe place.**

Note: Do not use petroleum based products.

Monthly or after 20 hours:

Make sure all bolts and screws are tight. Tighten as necessary.

Moving the Bike

The machine may be moved by one or more persons depending on their physical abilities and capacities. Make sure that you and others are all physically fit and able to move the machine safely.

1. Remove the power cord.
2. Use the Transport Handle to carefully lift the machine onto the transport rollers.
3. Push the machine into position.
4. Carefully lower the machine into position.

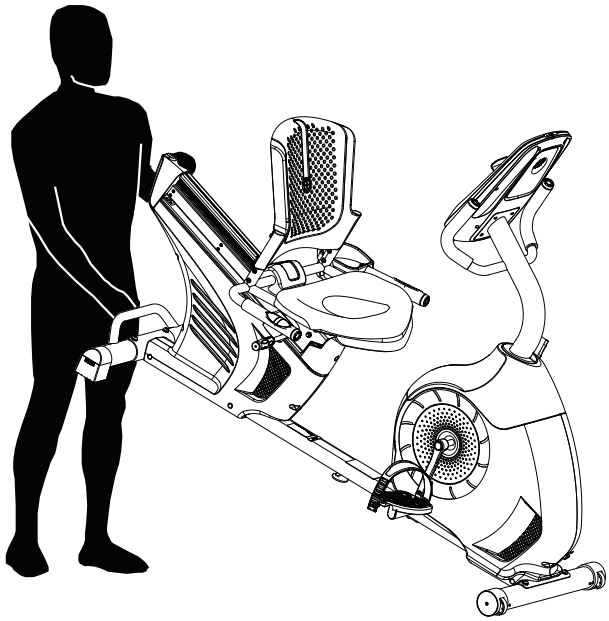

NOTICE: Be careful when you move the bike. Abrupt motions can affect the computer operation.

Leveling the Bike

Levelers are found on each side of the Rear Stabilizer and on the Frame Rail. On the Rear Stabilizer, turn the knob to adjust the stabilizer foot.

To adjust the leveler on the Frame Rail:

1. Loosen the upper locking nut.
2. Turn the leveler to adjust the height.

Do not adjust the levelers to such a height that they detach or unscrew from the machine. Injury to you or damage to the machine can occur.

3. Tighten the upper locking nut to lock the leveler.

Make sure the bike is level and stable before you exercise.

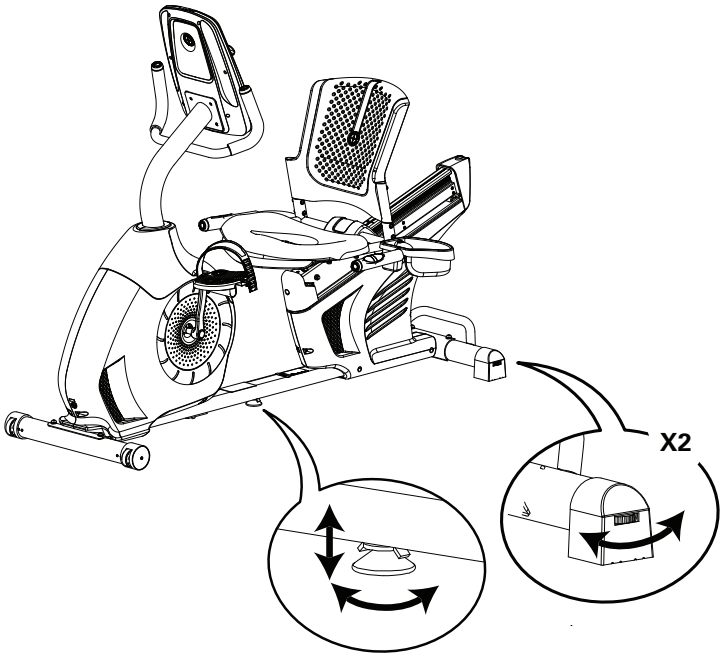

USB Charging

If a USB Device is attached to the USB Port, the Port will attempt to charge the Device.

Note: Depending on the amperage of device, the power supplied from the USB Port may not be enough to operate the Device and charge it at the same time.

Virtual Reality experience on your fitness machine

This fitness machine is equipped to support a Virtual Reality (VR) experience on supported devices. The RPM Sensor detects the motion of the 8 Speed Sensor Magnets on the Drive Pulley as it rotates, and transmits the signals to the Console for VR input.

Review, understand, and follow all warning instructions and the correct operation as supplied with your Virtual Reality equipment.

No one under the age of 13 should use this exercise equipment or the Virtual Reality experience.

Before starting a workout with the Virtual Reality experience, be sure the workout area is and will be clear throughout the workout, and that all persons or pets are restricted from the workout area. If necessary, a second person should be used to help secure the area.

The VR experience produces an immersive virtual reality experience that distracts and blocks the view of the actual surroundings. For the safest experience, only use the VR experience when operating the fitness equipment in the seated position. Do not start the VR experience until seated and ready to start a workout. Be sure the area is secure and that the workout area is safe from potential harm and clear of all obstacles within reach. Damage to you or items in the workout area could result during a VR workout. Stay seated on the exercise equipment until the VR gear has been removed and the actual surroundings are viewable.

If dizziness or motion sickness is experienced from the Virtual Reality experience, safely balance yourself and stop the Virtual Reality experience as soon as possible. Coordination and balance is required when using the VR experience with the exercise machine.

Consult with a doctor before using the VR experience if you have any conditions which may be affected by an immersive Virtual Reality experience, such as epilepsy, pregnant, elderly, psychotic disorders, vision abnormalities, heart conditions, or any other medical condition.

Speakers and Audio Cable

To play audio through the speakers on your machine, attach the Audio Cable to your device and to the Audio Cable Port on the Console. With the Console turned on, you can play audio from your device through the speakers. Volume is controlled from your device.

Note: Though your machine is Bluetooth® enabled, it is unable to receive and play audio across a Bluetooth® connection.

Troubleshooting

Condition/Problem	Things to Check	Solution
No display/partial display/ unit will not turn on	Check electrical (wall) outlet	Make sure unit is plugged into a functioning wall outlet.
	Check connection at front of unit	Connection should be secure and undamaged. Replace adapter or connection at unit if either are damaged.
	Check data cable integrity	All wires in cable should be intact. If any are visibly crimped or cut, replace cable.
	Check data cable connections/orientation	Be sure cable is connected securely and oriented properly. Small latch on connector should line up and snap into place.
	Check console display for damage	Check for visual sign that console display is cracked or otherwise damaged. Replace Console if damaged.
	Console Display	If Console only has partial display and all connections are fine, replace the Console.
		If the above steps do not resolve the problem, contact Customer Service (if inside US/Canada) or your local distributor (if outside US/Canada).
Unit operates but Contact HR not displayed	HR cable connection at Console	Be sure cable is connected securely to Console.
	HR cable box connection	Be sure cables from handlebars and cable to Console are secure and undamaged.
	Sensor grip	Be sure hands are centered on HR sensors. Hands must be kept still with relatively equal pressure applied to each side.
	Dry or calloused hands	Sensors may have difficulty with dried out or calloused hands. A conductive electrode cream (heart rate cream) can help make better conduct. These are available on the web or at medical or some larger fitness stores.
	Static Handlebar	If tests reveal no other issues, Static Handlebar should be replaced.
Unit operates but Telemetric HR not displayed	Chest Strap (optional)	Strap should be “POLAR®” compatible and uncoded. Make sure strap is directly against skin and contact area is wet.
	Chest Strap Batteries	If strap has replaceable batteries, install new batteries.
	Check User Profile	Select the Edit User Profile option for the User Profile. Go to the WIRELESS HR setting and make sure that the current value is set to ON.
	Interference	Try moving unit away from sources of interference (TV, Microwave, etc).
	Replace Chest Strap	If interference is eliminated and HR does not function, replace strap.
	Replace Console	If HR still does not function, replace Console.
Unit operates but Telemetric HR displayed incorrectly	Interference	Make sure that the HR receiver is not blocked by a personal electronic device in the left side of the media tray.
Console displays “E2” error code	Check data cable integrity	All wires in cable should be intact. If any are cut or pinched, replace cable.
	Check data cable connections/orientation	Be sure cable is connected securely and oriented properly. Small latch on connector should line up and snap into place.
	Console Electronics	If tests reveal no other issues, contact Customer Care.

Condition/Problem	Things to Check	Solution
No speed/RPM reading, Console displays “Please Pedal” error code	Check data cable integrity	All wires in cable should be intact. If any are cut or pinched, replace cable.
	Check data cable connections/orientation	Be sure cable is connected securely and oriented properly. Small latch on connector should line up and snap into place.
	Check magnet position (requires shroud removal)	Magnets should be in place on pulley.
	Check Speed Sensor (requires shroud removal)	Speed sensor should be aligned with magnet and connected to data cable. Realign sensor if necessary. Replace if there is any damage to the sensor or the connecting wire.
Resistance does not change (machine turns on and operates)	Batteries (if equipped)	Replace batteries and check for proper operation.
	Check Console	Check for visual sign that Console is damaged. Replace Console if damaged.
	Check data cable integrity	All wires in cable should be intact. If any are visibly pinched or cut, replace cable.
	Check data cable connections/orientation	Be sure cable is connected securely and oriented properly. Reseat all connections. Small latch on connector should line up and snap into place.
	Check Servo Motor (requires shroud removal)	If magnets move, adjust until they are within the proper range. Replace Servo Motor if not functioning properly.
		If the above steps do not resolve the problem, contact Customer Service (if inside US/Canada) or your local distributor (if outside US/Canada) for further assistance.
Console shuts off (enters sleep mode) while in use	Check electrical (wall) outlet	Make sure unit is plugged into a functioning wall outlet.
	Check connection at front of unit	Connection should be secure and undamaged. Replace adapter or connection at unit if either are damaged.
	Check data cable integrity	All wires in the cable should be intact. If any are cut or pinched, replace cable.
	Check data cable connections/orientation	Be sure cable is connected securely and oriented properly. Small latch on connector should line up and snap into place.
	Reset machine	Unplug unit from electrical outlet for 3 minutes. Reconnect to outlet.
	Check magnet position (requires shroud removal)	Magnets should be in place on pulley.
	Check Speed Sensor (requires shroud removal)	Speed sensor should be aligned with magnet and connected to data cable. Realign sensor if necessary. Replace if there is any damage to the sensor or the connecting wire.
Fan will not turn on or will not turn off	Check data cable integrity	All wires in cable should be intact. If any are cut or pinched, replace cable.
	Check data cable connections/orientation	Be sure cable is connected securely and oriented properly. Small latch on connector should line up and snap into place.
	Reset machine	Unplug unit from electrical outlet for 3 minutes. Reconnect to outlet.
Fan will not turn on, but Console operates	Check for blockage of fan	Unplug unit from electrical outlet for 5 minutes. Remove material from fan. If necessary, detach the Console to help with removal. Replace the Console if unable to remove blockage.

Condition/Problem	Things to Check	Solution
Unit rocks/does not sit level	Check leveler adjustment	Adjust levelers until machine is level.
	Check surface under unit	Adjustment may not be able to compensate for extremely uneven surfaces. Move machine to level area.
Pedals loose/unit difficult to pedal	Check pedal to crank connection	Pedal should be tightened securely to crank. Be sure connection is not cross threaded.
	Check crank to axle connection	Crank should be tightened securely to axle. Be sure cranks are connected at 180 degrees from each other.
Clicking sound when pedaling	Check pedal to crank arm connection	Remove pedals. Make sure there is no debris on threads, and reinstall the pedals
Seat Assembly shifts / squeaks when in use	Hardware	Check hardware that attaches Seat assembly, and fully tighten hardware.
Workout results will not sync with Bluetooth® enabled device	Current console mode	Machine must be in Idle Mode to sync. Push the PAUSE/STOP button until the Power-Up Mode screen is displayed.
	Total time of workout	A workout must be longer than 1 minute to be saved and posted by the Console.
	Fitness machine	Unplug unit from electrical outlet for 5 minutes. Reconnect to outlet.
	Bluetooth® enabled device	Consult your device to be sure that the Bluetooth® wireless feature has been enabled on it.
	Fitness App	Review Specifications of Fitness App and confirm your device is compatible.
		Contact appsupport@nautilus.com (if inside US/Canada) or your local distributor (if outside US/Canada) for further assistance.

Console Setup Mode – 170 / 270 series (MY17) Console

The Console Setup Mode lets you input the date and time, set the units of measurement to either English or Metric, control the sound settings (on/ off), or see maintenance statistics (Total Run Hours – for service technician use only).

1. Hold down the PAUSE/END button and Right button together for 3 seconds while in the Power-Up Mode to go into the Console Setup Mode.

   Note: Push PAUSE/END to exit the Console Setup Mode and return to the Power-Up Mode screen.

2. The Console display shows the Date prompt with the current setting. To change, push the Increase/Decrease buttons to adjust the currently active value (flashing). Push the Left/Right buttons to change which segment is the currently active value (month / day / year).
3. Push OK to set.
4. The Console display shows the Time prompt with the current setting. Push the Increase/Decrease buttons to adjust the currently active value (flashing). Push the Left/Right buttons to change which segment is the currently active value (hour / minute / AM or PM).
5. Push OK to set.
6. The Console display shows the Units prompt with the current setting. To change, push OK to start the Units option. Push the Increase/Decrease buttons to change between “MILES” (Imperial English units) and “KM” (metric units).

   Note: If the units change when there is data in User Statistics, the statistics convert to the new units.

7. Push OK to set.
8. The Console display shows the Sound Settings prompt with the current setting. Push the Increase/Decrease buttons to change between “ON” and “OFF”.
9. Push OK to set.

10. The Console display shows the TOTAL RUN HOURS for the machine.

    To go to the next Console Setup Mode prompt, push the OK button. (Go to step 11.)

11. The Console display shows the Software Version prompt. Push OK to go to the next prompt.
12. READING BLE – The Console display shows the Bluetooth® reading string.
13. DISCONNECT BLE_NO – Push the Increase/Decrease buttons to adjust the value (NO/YES). Push OK to set.
14. VIEW ERROR MSG_NO – Push the Increase/Decrease buttons to adjust the value (NO/YES). Push OK to set.
15. RESET CONSOLE_NO – This option resets the data from user inputs. Push the Increase/Decrease buttons to adjust the value (NO/YES). If YES is selected, the Console setup, user records and workout records will be reset to defaults. This option does not reset MFG NVM (non volatile memory).

16 . The Console will display the Power-Up Mode screen.

Console Service Mode – 170 / 270 series (MY17) Console

SERVICE MODE is a sub-menu from the CONSOLE SETUP MODE. Most of the options contained within the Service Mode are for Service Technicians and should not need to be used by a user.

To access the Engineering Mode:

1. From the Power Up (or Welcome) screen, push and hold down the PAUSE/STOP button and Right arrow button for about 5 seconds to go into the Console Setup Mode. The Console display will show the Date prompt with the current setting.

   Note: Push PAUSE/STOP to exit the Console Setup Mode and return to the Power-Up Mode screen.

2. Push the OK button 4 times until the Console displays the TOTAL RUN HOURS screen.
3. To enter the Manufacturing Menu (MFG Menu), hold down the PAUSE/END button and Right button together for 3 seconds. The Console display shows the Firmware Version string. Push the Up/Down buttons to move through the MFG Menu options. Push OK to make a selection.
   a. ENTER MFG TEST – This option is intended for use on the manufacturing production line only. It is a chained series of tests similar to the tests listed below, but optimized to be run on the production line. Use of this chained test should not be necessary anywhere but on the production line.
   b. The main processor SoftwareVersion prompt is displayed.
   c. ENTR NVM TST – (Non-Volatile Memory or Flash test) Push OK two times. If correct, NVM ID PASS is displayed. Press OK to exit.
   d. ENTR LCD TST – Drives 3x5 and 1x5 LCD displays with the following patterns:
      1. All LEDs On 1 second
      2. All LEDs Off 1 second
      3. Sequence Segments 1 at a time – on 1 second, off 1 second

      Press OK to exit test
   e. ENTR LED TST – Drives LEDs to the following states:
      1. All LEDs On 1 second
      2. All LEDs Off 1 second
      3. Sequence Segments 1 at a time – on 1 second, off 1 second

      Press OK to exit test
   f. ENTR RTC TST – Shows the real time change. Push OK again to start the Console internal check. If no failure, RTC PASS is displayed. Press OK to exit.
   g. ENTR AUD TST – (audio test) Sounds each system beep / tone / sequence in order. Press OK to exit.
   h. ENTR HR TST – (Wireless and Contact Heart Rate test)
      -To test Contact Heart Rate, apply HR signals to contact input or place hands on heart rate grips. The CHR field displays contact heart rate.
      - To test Wireless Heart Rate, apply HR signals to contact input or turn on wireless transmitter. The WHR field displays wireless heart rate.
      The numbers displayed on LCD should be within normal range and match with the test subject or simulator.

i. ENTR KEY TST – Push OK to go to BUTTON TEST prompt. Push OK to start the test. The Console display shows the function of each button as the buttons are pressed in the correct sequence shown (1 – 25). The function numbers are displayed as 0 – 23 then BUTTON PASS (instead of 24).

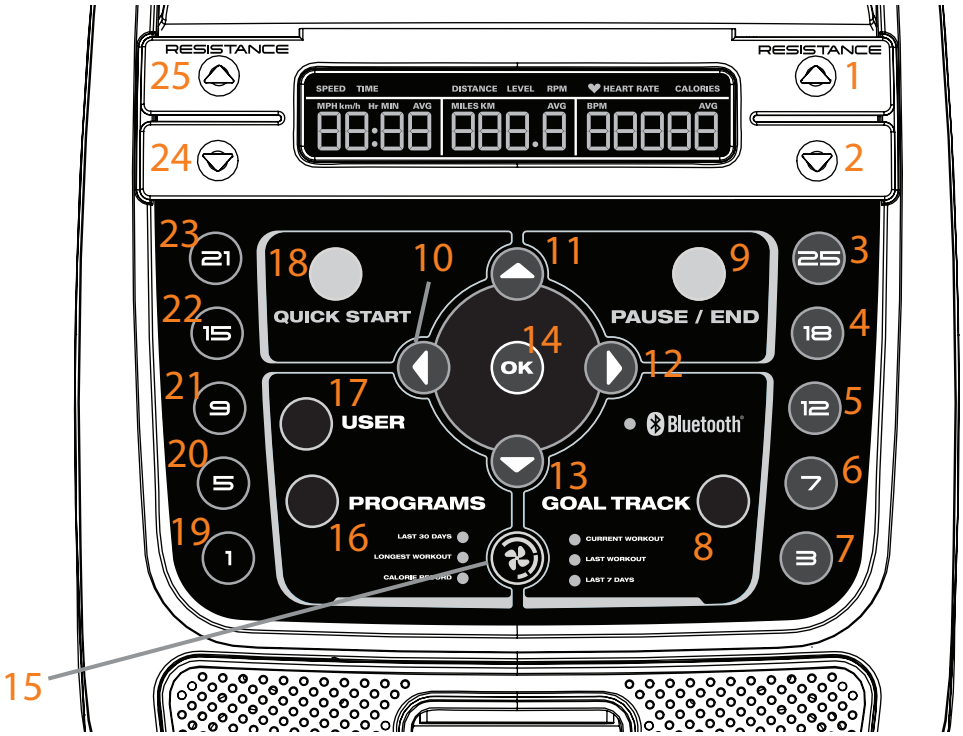

If the display shows an incorrect function, the overlay on the Console may be incorrect for that model. If the display does not show a function, the firmware version may be incorrect.

j. ENTR FAN TST – Console Firmware will cause fan to cycle between run and stop. Monitor fan's action. Press OK to exit.

k. ENTR RSTN TST – (resistance test) Console Firmware will cause external servo motor to move up then back to lowest setting, and show a RESISTANCE PASS. Monitor servo motor's activation during test. Press OK to exit.

l. ENTR INCLN TST – (incline test, 470 elliptical only.) Not used for 170/270 bikes. Allows lift motor adjustment: move it up or down, or stop movement.

m. ENTR TACH TST – The tach rate will be displayed in the LCD. Displayed rate approximately equals (Input signal in Hz) X 60 ÷ 8. Confirm that the displayed number matches the input value. Press OK to exit.

n. ENTR BLE TEST – (Bluetooth® test) Console Firmware will test communications with BLE module. If BLE module communication is valid and programmed, BLE PASS is displayed. If not correct, BLE FAIL is displayed. Press OK to exit.

o. ENTR RST CNSL – (console reset) The Console setup, user records and workout records are reset to defaults. This option also resets MFG NVM (non-volatile memory). When complete, the Console displays POWER CYCLE NOW. After the ''POWER CYCLE NOW" flashes in LCD, turn power off then back on. The Console returns to initial state with date inputs prompt for users.

Note: After accessing the MFG Menu, if you use PAUSE/END to go back to the Power-Up Mode screen and then hold down the PAUSE/END + Right buttons for Console Setup Mode, the Console will go directly to the MFG Menu instead. It is necessary to power the machine off and on to restore the automatic path to Console Setup Mode.

Maintenance Parts Exploded View

Your machine may differ. Use only as a guide.

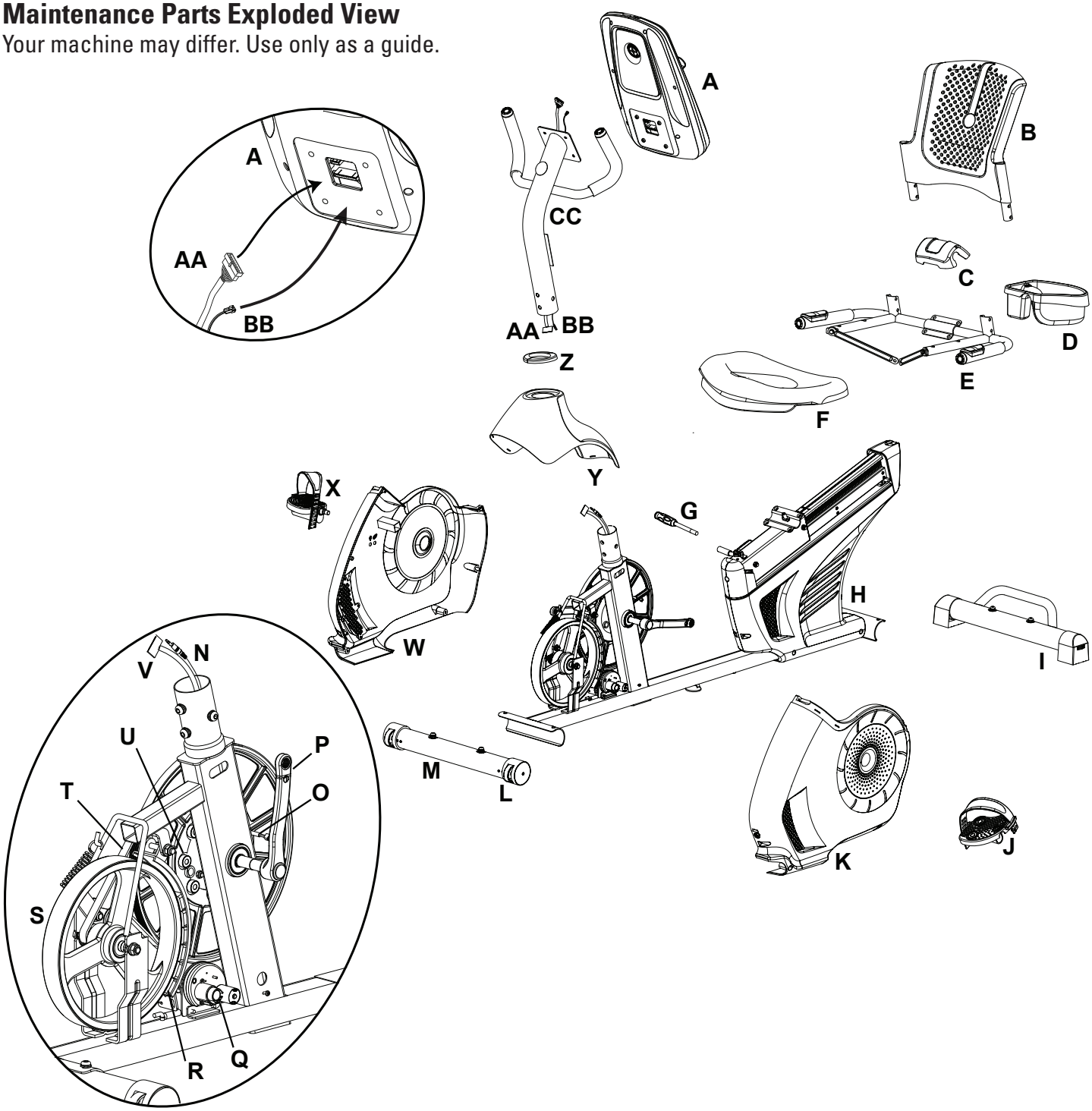

A	Console	K	Shroud, Left	U	Speed Sensor Magnets (8)
B	Seat Back	L	Transport Wheel	V	Console Cable, Lower
C	Seat Cover	M	Stabilizer, Front	W	Shroud, Right
D	Water Bottle Holder	N	Heart Rate Cable, Lower	X	Pedal, Right
E	Handlebar, Side	O	Speed Sensor	Y	Shroud, Upper
F	Seat Bottom	P	Crank Arm	Z	Shroud Cap
G	Seat Adjustment Handle	Q	Servo Motor	AA	Console Cable, Upper
H	Frame Assembly	R	Brake Assembly	BB	Heart Rate Cable, Upper
I	Rear Stabilizer	S	Flywheel	CC	Console Mast
J	Pedal, Left	T	Drive Belt		

REPLACEMENT PROCEDURE SKILL LEVEL

Level I :	Low - very little mechanical knowledge or exposure.
Level II :	Intermediate - some experience with mechanical procedures
Level III :	Advanced - knowledgeable about mechanical procedures

Disconnect all power to the machine before you service it.

When disposing of old parts, obey the applicable local and provincial requirements.

For instructions to replace the following parts, please refer to the Assembly Manual for your bike:

- AC Adapter
- Seat
- Side Handlebar
- Front Stabilizer
- Rear Stabilizer
- Water Bottle Holder

Adjust the Belt Tension on the Schwinn™ 130/170/230/270 and Journey 1.0/1.5/2.0/2.5 Exercise Bikes

NOTICE: This document provides instructions for the adjustment of the Drive Belt tension on the Schwinn™ 130/170 Upright Bikes, 230/270 Recumbent Bikes, Journey 1.0/1.5 Upright Bikes and Journey 2.0/2.5 Recumbent Bikes.

If you need assistance, please contact Customer Service (if purchased in US/Canada) or your local distributor (if purchased outside US/Canada). To find your local distributor, go to: www.nautilusinternational.com

This icon means a potentially hazardous situation which, if not avoided, could result in death or serious injury. Read and understand all Warnings on this machine.

Nautilus, Inc., (800) NAUTILUS / (800) 628-8458, www.NautilusInc.com - Customer Service: North America (800) 605-3369, csnls@nautilus.com | outside U.S. www.nautilusinternational.com | © 2013 Nautilus, Inc. | Schwinn is a trademark licensed to Nautilus, Inc., which is registered or otherwise protected by common law in the United States and other countries. | **ORIGINAL DOCUMENT - ENGLISH VERSION ONLY**

Important Safety Instructions - Before servicing or using this equipment, obey the following warnings:

This icon means a potentially hazardous situation which, if not avoided, could result in death or serious injury. Read and understand all Warnings on this machine.

Disconnect all power to the machine before you service it.

- Keep bystanders and children away from the product being serviced at all times.
- Make sure that the repair is done in an appropriate work space away from foot traffic and exposure to bystanders.
- Some components of the equipment can be heavy or awkward. Enlist the service of a second person when you do maintenance steps involving these components. Do not try to do heavy or awkward steps on your own.
- If replacement parts are necessary, use only genuine replacement parts and hardware supplied by Nautilus. Failure to use genuine replacement parts can cause a risk to users, keep the machine from operating correctly and void the warranty.
- Be sure that all warning stickers and instructional placards applied to the product stay present and in good condition when doing maintenance or replacing components. If at any time the Warning labels become loose, unreadable or dislodged, replace the labels. If purchased in US/Canada, contact Customer Service for replacement labels. If purchased outside US/Canada, contact your local distributor for them.
- Do not try to change the design or functionality of the machine being serviced as this can adversely affect user safety.
- Do not put the machine back in service until all shrouds, instructions, warning labels and correct functionality have been verified and tested for correct performance.

SAVE THESE INSTRUCTIONS.

Tools Required (not included)

#2 Phillips screwdriver

15mm open end wrench

Small flathead screwdriver

15mm socket and wrench

Pedal wrench or 15mm open end wrench (130/230)
or crank puller (170/270)

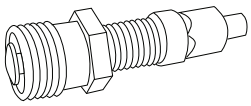

NOTICE: It is necessary to remove the Shrouds for this procedure. Refer to the "Replace the Shrouds" procedure.

Disconnect all power to the machine before you service it.

Note: Your machine may not match the image. For reference only.

1. Remove the Top Shroud, Left Shroud and Right Shroud from the Main Unit. Refer to the "Replace the Shrouds" procedure.

2. To test the Drive Belt tension:

- Push the Drive Belt downward at the midpoint (M) between the pulleys and measure the distance. The Drive Belt should have only 0.25" (0.64 cm) of give. See Figure 1.

Or:

- Hold the edges of the Drive Belt at the midpoint (M) and twist it (see Figure 2). It should turn only 90 degrees (1/4 turn, to vertical).

If the tension is correct, go to Step 6.

If the tension is too loose or too tight, adjust the position of the Flywheel. Continue to Step 3.

3. To loosen the Flywheel hardware (A), use a 15 mm open end wrench to hold the nut on one side steady and loosen the nut on the opposite side with a 15 mm socket and wrench.

4. Move the Flywheel in the Main Frame bracket as necessary to adjust the tension. Hold it in position and tighten the hardware.

Note: This step may require two people.

To tighten the Flywheel hardware, use a 15 mm open end wrench to hold the nut on one side steady and tighten the nut on the opposite side with a 15 mm socket and wrench.

5. Carefully turn the crank arms and check the movement of the drive belt. The Crank Arms and Flywheel should move as one.

Be sure to keep fingers clear of all pinch hazards when you turn the Drive Pulley.

Adjust the belt tension again if necessary.

Figure 1

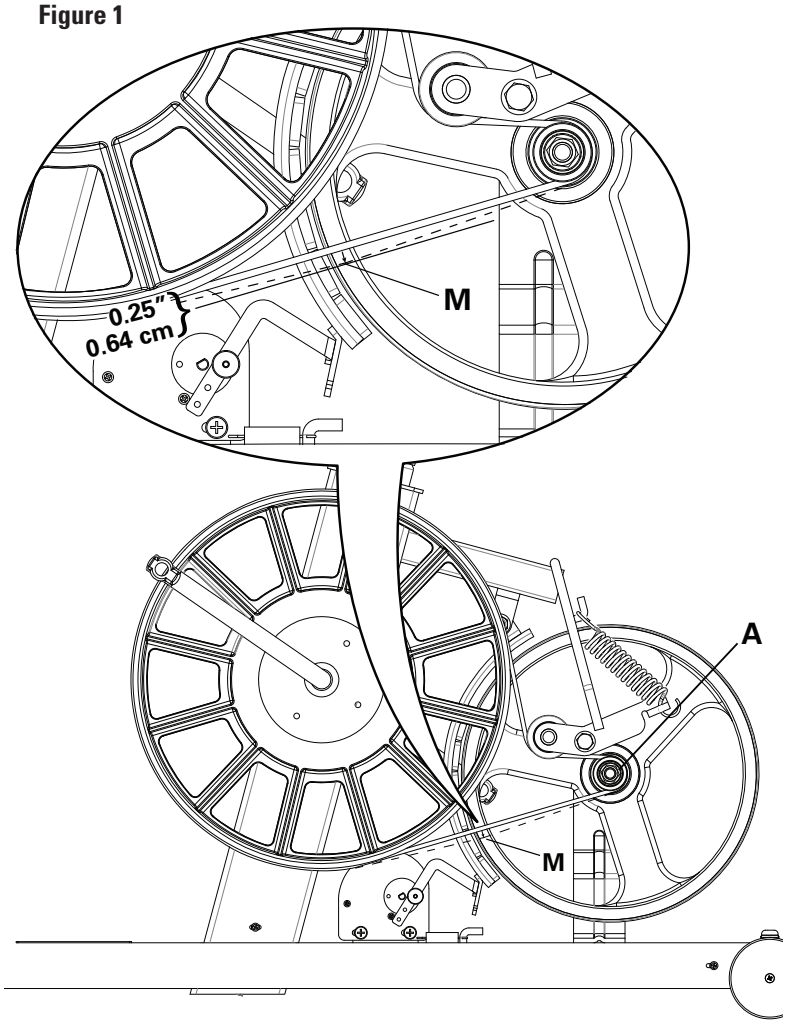

(Main Frame bracket not shown for clarity)

Figure 2

6. Reassembly is the reverse procedure.

NOTICE: Be sure not to cut or pinch any cables.

130/230 bikes—To reinstall the Pedals, carefully align the threads and hand tighten to prevent cross-threading. Then tighten fully with pedal wrench.

Note: The Left Pedal is reverse-threaded. Orientation is based from a seated position on the bike. The Left Pedal has an "L", the Right Pedal an "R".

16. Final Inspection

Inspect your machine to ensure that all hardware is tight and components are properly assembled.

Do not use until the machine has been fully assembled and inspected for correct performance in accordance with the Owner's Manual.

Set the Brake Tension (Calibration) on the Schwinn™ 270 (Model Year 2017) Bike

Replacement Procedure
Skill Level: III
8012688.030123.C

NOTICE: This document provides instructions for the calibration of the Brake tension on the Schwinn™ 270 (Model Year 2017) Recumbent Bike.

If you need assistance, please contact Customer Service (if purchased in US/Canada) or your local distributor (if purchased outside US/Canada). To find your local distributor, go to: www.nautilusinternational.com

This icon means a potentially hazardous situation which, if not avoided, could result in death or serious injury. Read and understand all Warnings on this machine.

Nautilus, Inc., (800) NAUTILUS / (800) 628-8458, www.NautilusInc.com - Customer Service: North America (800) 605-3369, csnls@nautilus.com | outside U.S. www.nautilusinternational.com | © 2016 Nautilus, Inc. | Schwinn is a trademark licensed to Nautilus, Inc., which is registered or otherwise protected by common law in the United States and other countries. | **ORIGINAL DOCUMENT - ENGLISH VERSION ONLY**

Important Safety Instructions - Before servicing or using this equipment, obey the following warnings:

This icon means a potentially hazardous situation which, if not avoided, could result in death or serious injury. Read and understand all Warnings on this machine.

Disconnect all power to the machine before you service it.

- Keep bystanders and children away from the product being serviced at all times.
- Make sure that the repair is done in an appropriate work space away from foot traffic and exposure to bystanders.
- Some components of the equipment can be heavy or awkward. Enlist the service of a second person when you do maintenance steps involving these components. Do not try to do heavy or awkward steps on your own.
- If replacement parts are necessary, use only genuine replacement parts and hardware supplied by Nautilus. Failure to use genuine replacement parts can cause a risk to users, keep the machine from operating correctly and void the warranty.
- Be sure that all warning stickers and instructional placards applied to the product stay present and in good condition when doing maintenance or replacing components. If at any time the Warning labels become loose, unreadable or dislodged, replace the labels. If purchased in US/Canada, contact Customer Service for replacement labels. If purchased outside US/Canada, contact your local distributor for them.
- Do not try to change the design or functionality of the machine being serviced as this can adversely affect user safety.
- Do not put the machine back in service until all shrouds, instructions, warning labels and correct functionality have been verified and tested for correct performance.

SAVE THESE INSTRUCTIONS.

Tools Required (not included)

#2 Phillips screwdriver

7mm open end wrench

Small flathead screwdriver

2.5” x 10” cardboard (3mm / 1/8” thick) and tape

Crank puller

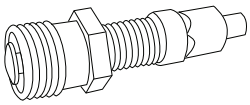

NOTICE: It is necessary to remove the shrouds for this procedure. Refer to the "Replace the Shrouds" procedure.

Note: Your machine may not match the image. For reference only.

1. Disconnect and reconnect the AC Adapter from the wall outlet to turn the power off and on.

2. Push QuickStart and verify that the console shows that the default resistance level is 4.

Disconnect all power from the machine.

3. Carefully remove the Left Shroud and Right Shroud. (Refer to the "Replace the Shrouds" procedure.) Turn the Top Shroud to keep it clear of the pulley assembly. Keep the Power Inlet cable (P) in the Shroud connected to the wiring harness on the motor (D).

Note: If it is necessary to remove the Top Shroud, reinstall the Console and Mast.

4. Insert 2.5" x 10" cardboard between the Brake Magnet (A) and the Flywheel (B), and tape the cardboard to the Brake Magnet.

Note: Be sure the cardboard covers all of the Brake Magnet.

4. Turn the power on again.

Machine is on. Current is active. There is risk of electrical shock.

5. Use the console to set the resistance to the highest level. This moves the Brake Magnet Arm (A1) forward. After the Brake Magnet Arm stops at the highest resistance level, turn power off.

Disconnect all power from the machine.

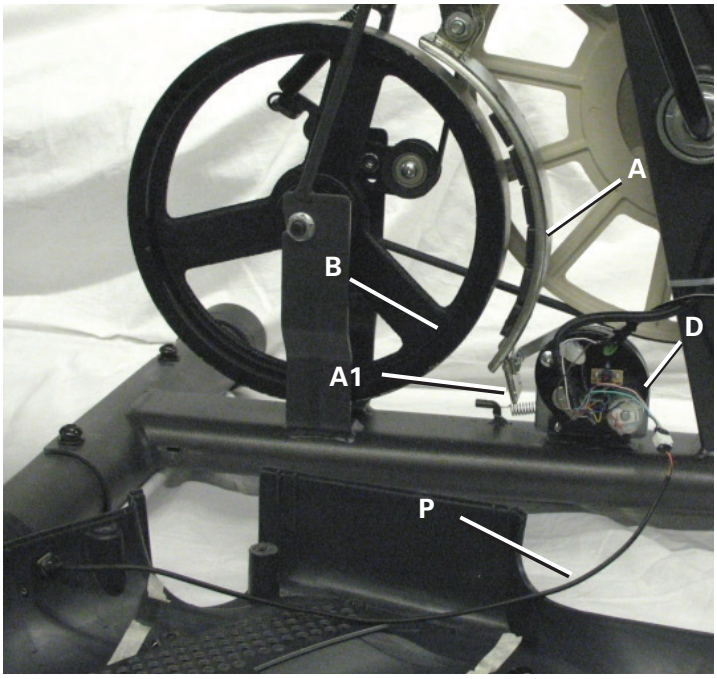

Left side

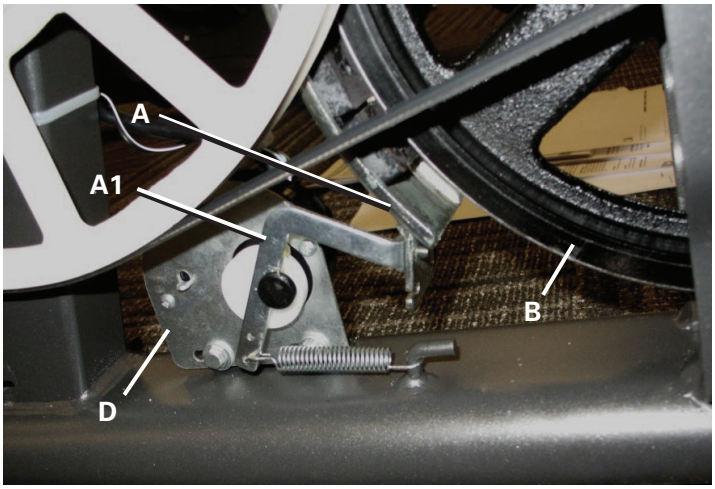

Right side

6. To adjust the Brake tension, loosen the 2 hex head bolts (C) and move the Servo Motor assembly (D) until the closest point on the Brake Magnet (A) is within 3.0 mm (1/8") of the Flywheel (B). Tighten the bolts.

Note: If the cardboard is not 3mm (1/8") thick, you can use the pages of a paperback book to measure the gap. Approximately 36 pages (sheets) = 3mm.

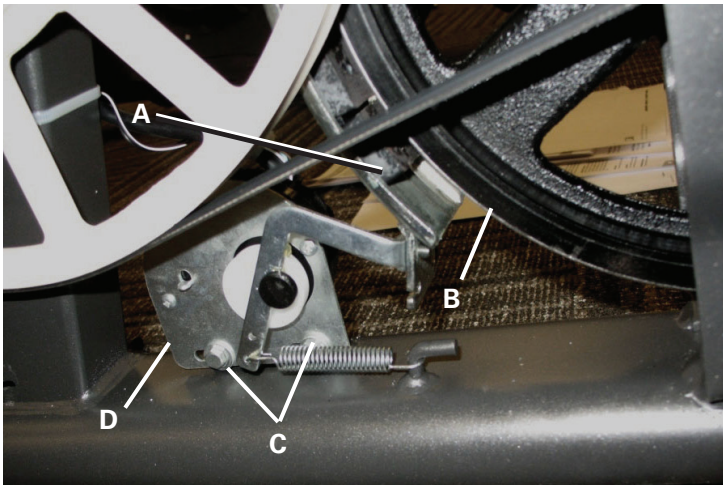

7. Turn the power on again. Use the console to check the resistance adjustment.

Machine is on. Current is active. There is risk of electrical shock.

Note: Before fully attaching the Shrouds, remove the cardboard from between the Brake Magnet (A) and the Flywheel (B). Power up the machine to verify that the Magnet Arm can move freely, and that the Brake Magnet and Flywheel do not touch.

8. Final Inspection

Inspect your machine to ensure that all hardware is tight and components are properly assembled.

Do not use until the machine has been fully assembled and inspected for correct performance in accordance with the Owner's Manual.

Replace the Console on the Schwinn™ 130/170/230/270 and Journey 1.0/1.5/2.0/2.5 Bikes

Replacement Procedure
Skill Level: II
8007218.030123.E

NOTICE: This document provides instructions for the replacement of the Console on the Schwinn™ 130/170 Upright Bikes, 230/270 Recumbent Bikes, Journey 1.0/1.5 Upright Bikes and Journey 2.0/2.5 Recumbent Bikes.

If you need assistance, please contact Customer Service (if purchased in US/Canada) or your local distributor (if purchased outside US/Canada). To find your local distributor, go to: www.nautilusinternational.com

This icon means a potentially hazardous situation which, if not avoided, could result in death or serious injury. Read and understand all Warnings on this machine.

Nautilus, Inc., (800) NAUTILUS / (800) 628-8458, www.NautilusInc.com - Customer Service: North America (800) 605-3369, csnls@nautilus.com | outside U.S. www.nautilusinternational.com | © 2013 Nautilus, Inc. | Schwinn is a trademark licensed to Nautilus, Inc., which is registered or otherwise protected by common law in the United States and other countries. | **ORIGINAL DOCUMENT - ENGLISH VERSION ONLY**

Important Safety Instructions - Before servicing or using this equipment, obey the following warnings:

This icon means a potentially hazardous situation which, if not avoided, could result in death or serious injury. Read and understand all Warnings on this machine.

Disconnect all power to the machine before you service it.

- Keep bystanders and children away from the product being serviced at all times.
- Make sure that the repair is done in an appropriate work space away from foot traffic and exposure to bystanders.
- Some components of the equipment can be heavy or awkward. Enlist the service of a second person when you do maintenance steps involving these components. Do not try to do heavy or awkward steps on your own.
- If replacement parts are necessary, use only genuine replacement parts and hardware supplied by Nautilus. Failure to use genuine replacement parts can cause a risk to users, keep the machine from operating correctly and void the warranty.
- Be sure that all warning stickers and instructional placards applied to the product stay present and in good condition when doing maintenance or replacing components. If at any time the Warning labels become loose, unreadable or dislodged, replace the labels. If purchased in US/Canada, contact Customer Service for replacement labels. If purchased outside US/Canada, contact your local distributor for them.
- Do not try to change the design or functionality of the machine being serviced as this can adversely affect user safety.
- Do not put the machine back in service until all shrouds, instructions, warning labels and correct functionality have been verified and tested for correct performance.

SAVE THESE INSTRUCTIONS.

Tools Required (not included)

#2 Phillips screwdriver

Disconnect all power to the machine before you service it.

Note: Your machine may not match the image. For reference only.

1. Remove screws that attach Console to the Mast. Carefully lift the Console off the Mast.

2. Disconnect the Data Cable and Heart Rate Cable from the back of the Console. Discard the Console and screws.

Note: Do not let the cables fall down inside the Mast. This step may require two people.

3. Installation is the reverse procedure.

4. Discard the old parts.

5. Inspect your machine to ensure that all hardware is tight and components are properly assembled.

Do not use until the machine has been fully assembled and inspected for correct performance in accordance with the Owner's Manual.

130 / 170

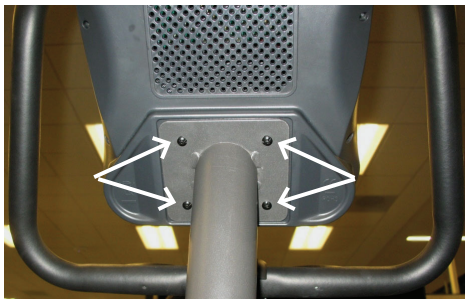

230 / 270

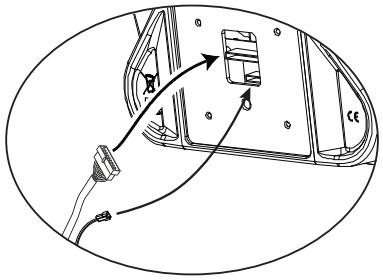

Initial Setup

During the first power-up, the Console should be set up with the date, time and your preferred measurement units.

1. Date: Push the Increase/Decrease buttons to adjust the currently active value (flashing). Push the Left/Right buttons to change which segment is the currently active value (month / day / year).

2. Push OK to set.

3. Time: Push the Increase/Decrease buttons to adjust the currently active value (flashing). Push the Left/Right buttons to change which segment is the currently active value (hour / minute / AM or PM).

4. Push OK to set.

5. Units of Measurement: Push the Increase/Decrease buttons to adjust between "MILES" (Imperial English) or "KM" (metric).

6. Push OK to set.

7. The Console display shows the Machine Type prompt with the current setting. This menu option appears in the x30 series console only (not the x70 series consoles). Push the Increase/Decrease buttons to change between "BIKE" and Elliptical ("ELIP").

8. Push OK to set. The Console goes back to the Power-Up / Idle Mode screen.

Note: To adjust these selections, consult the "Console Service Mode" section.

Replace the Pedals on the Schwinn™ 130/170/230/270 and Journey 1.0/1.5/2.0/2.5 Bikes

Replacement Procedure
Skill Level: I
8006488.030123.F

NOTICE: This document provides instructions for the replacement of the Pedals on the Schwinn™ 130/170 Upright Bikes, 230/270 Recumbent Bikes, Journey 1.0/1.5 Upright Bikes and Journey 2.0/2.5 Recumbent Bikes.

If you need assistance, please contact Customer Service (if purchased in US/Canada) or your local distributor (if purchased outside US/Canada). To find your local distributor, go to: www.nautilusinternational.com

This icon means a potentially hazardous situation which, if not avoided, could result in death or serious injury. Read and understand all Warnings on this machine.

Nautilus, Inc., (800) NAUTILUS / (800) 628-8458, www.NautilusInc.com - Customer Service: North America (800) 605-3369, csnls@nautilus.com | outside U.S. www.nautilusinternational.com | © 2013 Nautilus, Inc. | Schwinn is a trademark licensed to Nautilus, Inc., which is registered or otherwise protected by common law in the United States and other countries. | **ORIGINAL DOCUMENT - ENGLISH VERSION ONLY**

Important Safety Instructions - Before servicing or using this equipment, obey the following warnings:

This icon means a potentially hazardous situation which, if not avoided, could result in death or serious injury. Read and understand all Warnings on this machine.

Disconnect all power to the machine before you service it.

- Keep bystanders and children away from the product being serviced at all times.
- Make sure that the repair is done in an appropriate work space away from foot traffic and exposure to bystanders.
- Some components of the equipment can be heavy or awkward. Enlist the service of a second person when you do maintenance steps involving these components. Do not try to do heavy or awkward steps on your own.
- If replacement parts are necessary, use only genuine replacement parts and hardware supplied by Nautilus. Failure to use genuine replacement parts can cause a risk to users, keep the machine from operating correctly and void the warranty.
- Be sure that all warning stickers and instructional placards applied to the product stay present and in good condition when doing maintenance or replacing components. If at any time the Warning labels become loose, unreadable or dislodged, replace the labels. If purchased in US/Canada, contact Customer Service for replacement labels. If purchased outside US/Canada, contact your local distributor for them.
- Do not try to change the design or functionality of the machine being serviced as this can adversely affect user safety.
- Do not put the machine back in service until all shrouds, instructions, warning labels and correct functionality have been verified and tested for correct performance.

SAVE THESE INSTRUCTIONS.

Tools Required (not included)

Pedal wrench or 15mm open end wrench

Note: Your machine may not match the image. For reference only.

1. Loosen and remove the old Pedals. Discard the old Pedals.

Note: The Left Pedal is reverse-threaded. Orientation is based from a seated position on the bike. The Left Pedal has an "L", the Right Pedal an "R".

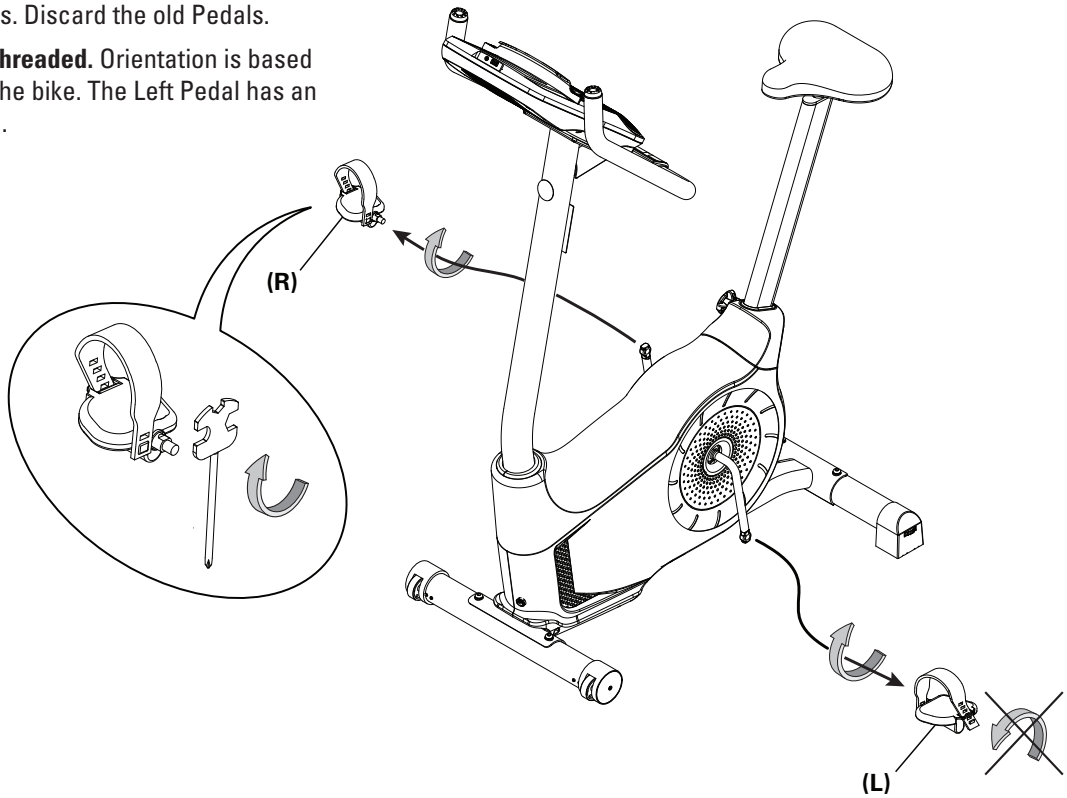

2. Install the new Pedals. Carefully align the threads and hand tighten to prevent cross-threading. Then tighten fully with pedal wrench.

Note: The Left Pedal is reverse-threaded. Be sure to attach Pedals on the correct side of the Bike. Orientation is based from a seated position on the bike. The Left Pedal has an "L", the Right Pedal an "R".

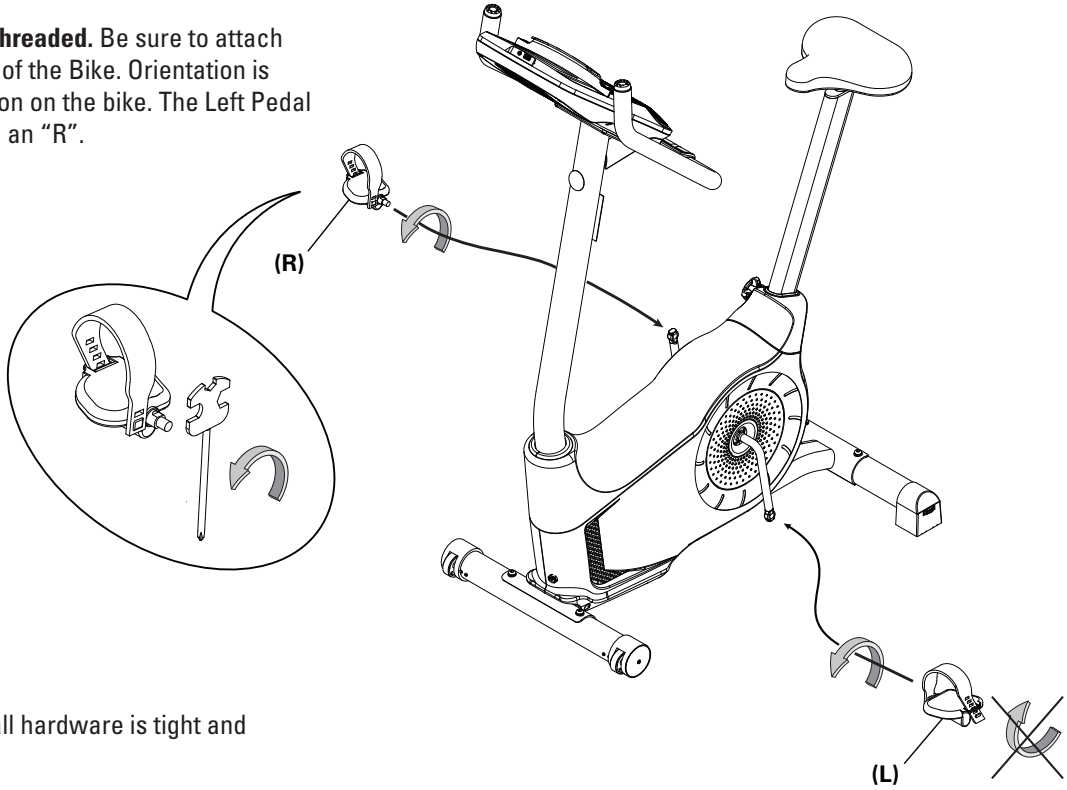

3. Final Inspection

Inspect your machine to ensure that all hardware is tight and components are properly assembled.

Do not use until the machine has been fully assembled and inspected for correct performance in accordance with the Owner's Manual.

Replace the Crank Arms on the Schwinn™ 170/270 and Journey 1.5/2/5 Bikes

Replacement Procedure
Skill Level: II
8006489.030123.F

NOTICE: This document provides instructions for the replacement of the Crank Arms on the Schwinn™ 170 Upright Bike, 270 Recumbent Bike, Journey 1.5 Upright Bike and Journey 2.5 Recumbent Bike.

If you need assistance, please contact Customer Service (if purchased in US/Canada) or your local distributor (if purchased outside US/Canada). To find your local distributor, go to: www.nautilusinternational.com

This icon means a potentially hazardous situation which, if not avoided, could result in death or serious injury. Read and understand all Warnings on this machine.

Nautilus, Inc., (800) NAUTILUS / (800) 628-8458, www.NautilusInc.com - Customer Service: North America (800) 605-3369, csnls@nautilus.com | outside U.S. www.nautilusinternational.com | © 2013 Nautilus, Inc. | Schwinn is a trademark licensed to Nautilus, Inc., which is registered or otherwise protected by common law in the United States and other countries. | **ORIGINAL DOCUMENT - ENGLISH VERSION ONLY**

Important Safety Instructions - Before servicing or using this equipment, obey the following warnings:

This icon means a potentially hazardous situation which, if not avoided, could result in death or serious injury. Read and understand all Warnings on this machine.

Disconnect all power to the machine before you service it.

- Read and understand the Part Replacement Procedure before working on the machine. Failure to obey the instructions and safety warnings could cause injury to the service technician or bystanders.
- Keep bystanders and children away from the product being serviced at all times.
- Make sure that the repair is done in an appropriate work space away from foot traffic and exposure to bystanders.
- Some components of the equipment can be heavy or awkward. Enlist the service of a second person when you do maintenance steps involving these components. Do not try to do heavy or awkward steps on your own.
- If replacement parts are necessary, use only genuine replacement parts and hardware supplied by Nautilus. Failure to use genuine replacement parts can cause a risk to users, keep the machine from operating correctly and void the warranty.
- Be sure that all warning stickers and instructional placards applied to the product stay present and in good condition when doing maintenance or replacing components. If at any time the Warning labels become loose, unreadable or dislodged, replace the labels. If purchased in US/Canada, contact Customer Service for replacement labels. If purchased outside US/Canada, contact your local distributor for them.
- Do not try to change the design or functionality of the machine being serviced as this can adversely affect user safety.
- Do not use the machine until all shrouds, instructions, warning labels and correct functionality have been verified and tested for correct performance.

Tools Required (not included)

#2 Phillips screwdriver

Flathead screwdriver

Pedal wrench
or 15mm open end wrench

13mm Wrench and socket

Crank puller

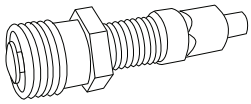

Adjustable wrench

Note: Your machine may not match the image. For reference only.

1. Loosen and remove the old Pedals. Set them safely aside for reassembly.

Note: The Left Pedal is reverse-threaded. Orientation is based from a seated position on the bike. The Left Pedal has an "L", the Right Pedal an "R".

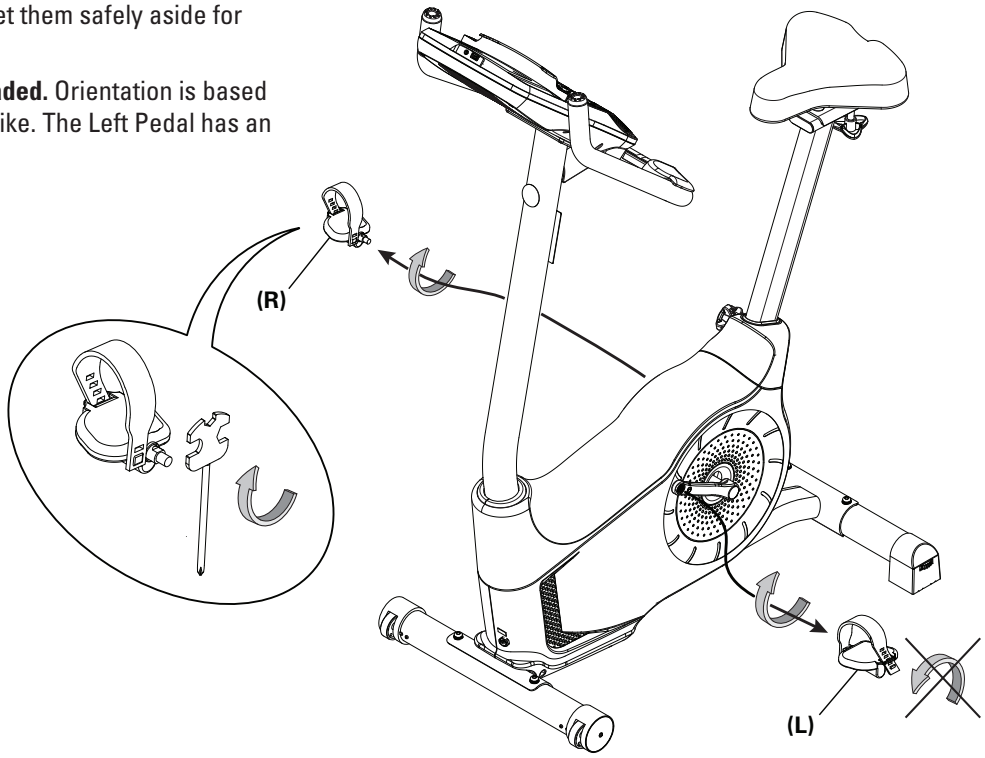

2. Using a flathead screwdriver, remove the threaded Cap (A) from the Crank Arm (B) to expose the Hex Head Bolt (C).

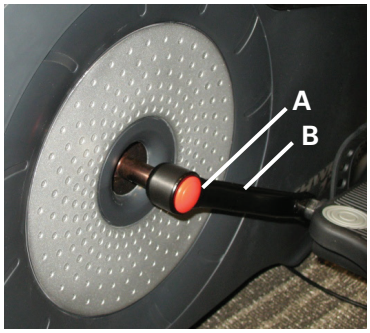

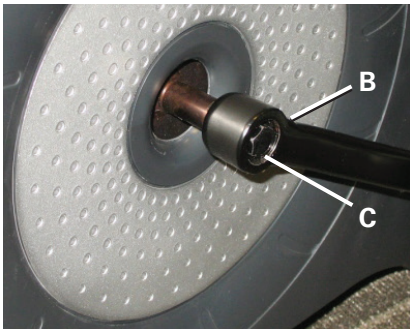

3. Using a 13 mm wrench and socket, remove the Hex Head Bolt (C).

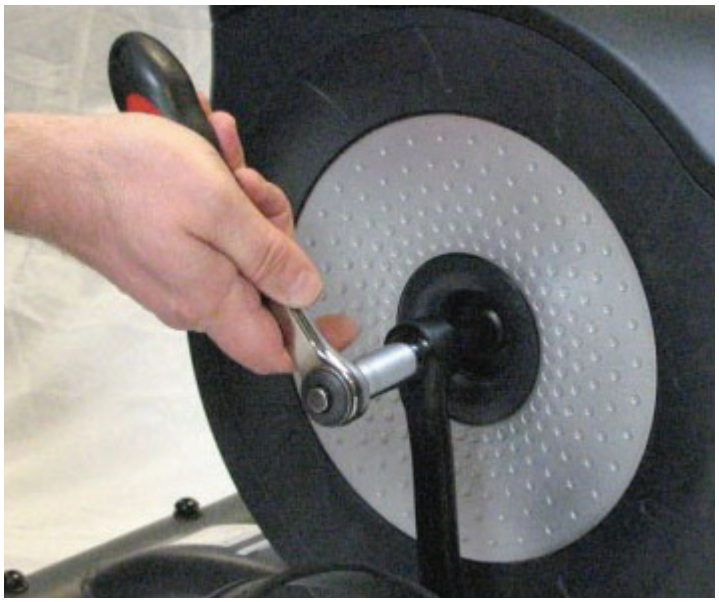

4. Thread the Crank Puller into the Crank Arm (B). When the Crank Puller is in the correct position, only 1-2 threads on the outer portion (CP2) of the Crank Puller should show.

Note: Be sure the end of the Bolt (CP1) of the Crank Puller is flush with the Nut (CP2) as shown, before use.

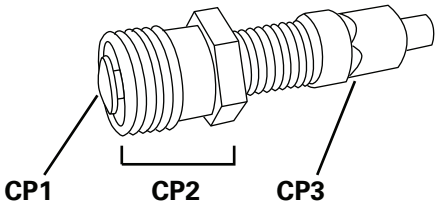

5. Using a wrench, turn the inner portion (CP3) of the Crank Puller clockwise. The Crank Arm (B) will slide off as it is tightened.

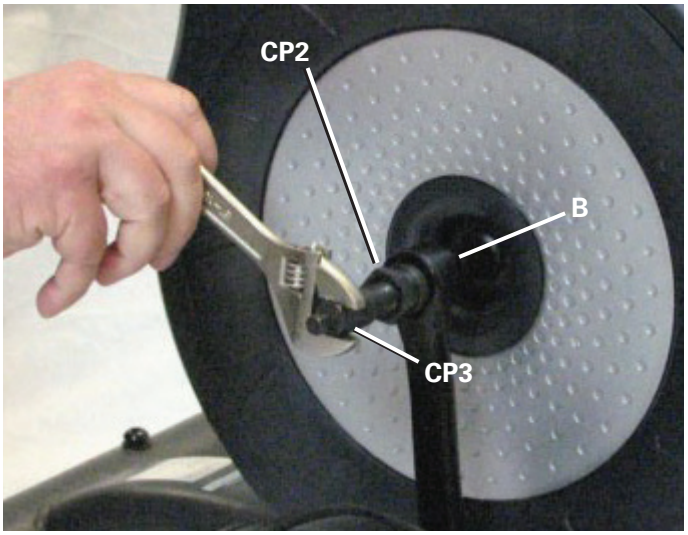

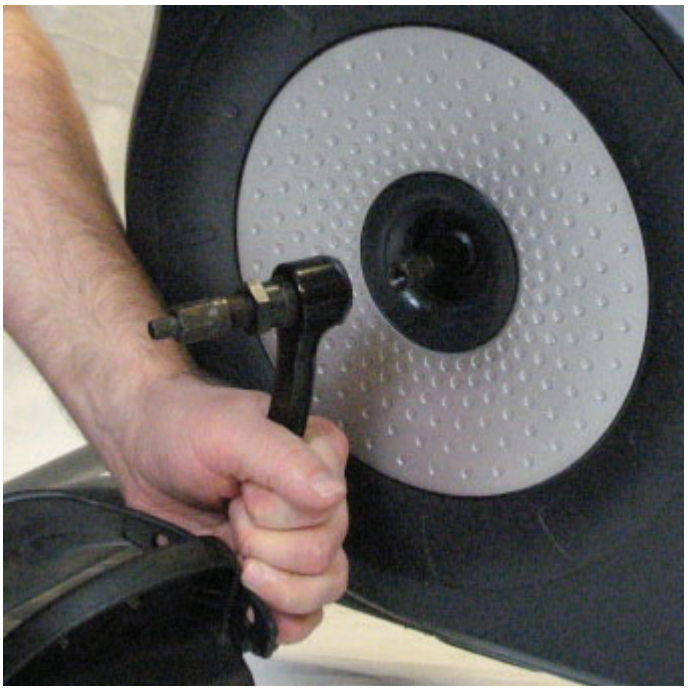

6. Installation is the reverse procedure. Installation does not require the use of the crank puller.

To reinstall the Pedals, carefully align the threads and hand tighten to prevent cross-threading. Then tighten fully with pedal wrench.

Note: The Left Pedal is reverse-threaded. Be sure to attach Pedals on the correct side of the Bike. Orientation is based from a seated position on the bike. The Left Pedal has an "L", the Right Pedal an "R".

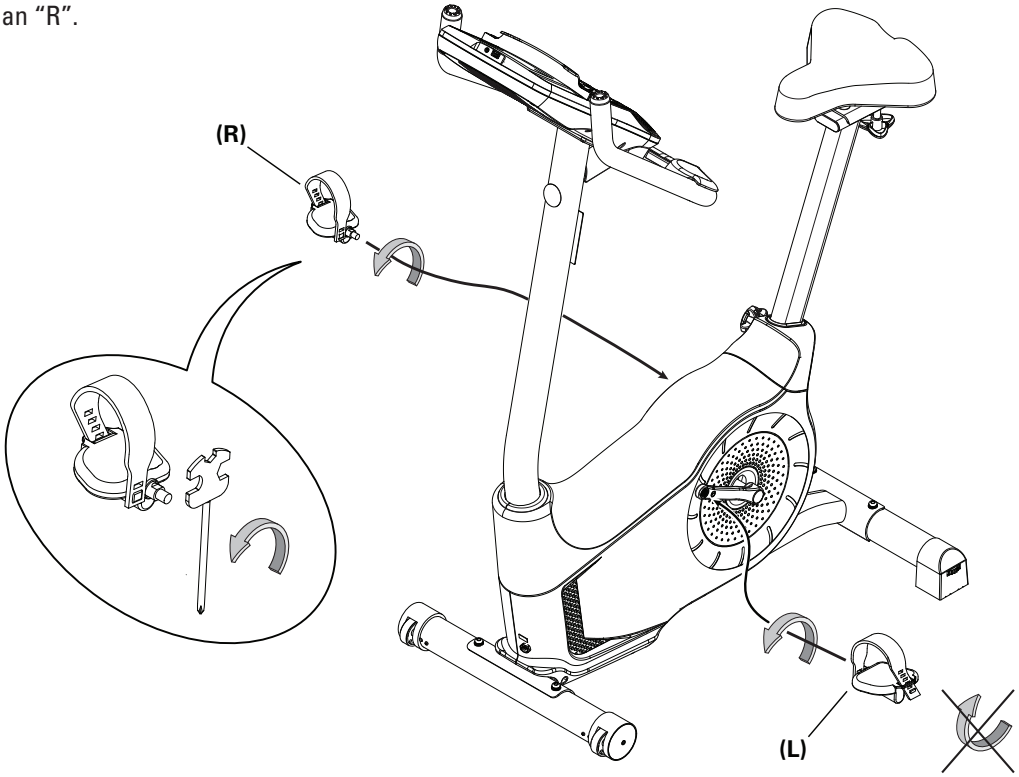

7. Final Inspection

Inspect your machine to ensure that all hardware is tight and components are properly assembled.

Do not use until the machine has been fully assembled and inspected for correct performance in accordance with the Owner's Manual.

Replace the Transport Wheels on the Schwinn™ 130/170/230/270 and Journey 1.0/1.5/2.0/2.5 Bikes

Replacement Procedure
Skill Level: II
8006490.030123.F

NOTICE: This document provides instructions for the replacement of the Transport Wheels on the Schwinn™ 130/170 Upright Bikes, 230/270 Recumbent Bikes, Journey 1.0/1.5 Upright Bikes and Journey 2.0/2.5 Recumbent Bikes.

If you need assistance, please contact Customer Service (if purchased in US/Canada) or your local distributor (if purchased outside US/Canada). To find your local distributor, go to: www.nautilusinternational.com

This icon means a potentially hazardous situation which, if not avoided, could result in death or serious injury. Read and understand all Warnings on this machine.

Nautilus, Inc., (800) NAUTILUS / (800) 628-8458, www.NautilusInc.com - Customer Service: North America (800) 605-3369, csnls@nautilus.com | outside U.S. www.nautilusinternational.com | © 2013 Nautilus, Inc. | Schwinn is a trademark licensed to Nautilus, Inc., which is registered or otherwise protected by common law in the United States and other countries. | **ORIGINAL DOCUMENT - ENGLISH VERSION ONLY**

This icon means a potentially hazardous situation which, if not avoided, could result in death or serious injury. Read and understand all Warnings on this machine.

Disconnect all power to the machine before you service it.

- Keep bystanders and children away from the product being serviced at all times.
- Make sure that the repair is done in an appropriate work space away from foot traffic and exposure to bystanders.
- Some components of the equipment can be heavy or awkward. Enlist the service of a second person when you do maintenance steps involving these components. Do not try to do heavy or awkward steps on your own.
- If replacement parts are necessary, use only genuine replacement parts and hardware supplied by Nautilus. Failure to use genuine replacement parts can cause a risk to users, keep the machine from operating correctly and void the warranty.
- Be sure that all warning stickers and instructional placards applied to the product stay present and in good condition when doing maintenance or replacing components. If at any time the Warning labels become loose, unreadable or dislodged, replace the labels. If purchased in US/Canada, contact Customer Service for replacement labels. If purchased outside US/Canada, contact your local distributor for them.
- Do not try to change the design or functionality of the machine being serviced as this can adversely affect user safety.
- Do not put the machine back in service until all shrouds, instructions, warning labels and correct functionality have been verified and tested for correct performance.

SAVE THESE INSTRUCTIONS.

Tools Required (not included)

#2 Phillips screwdriver

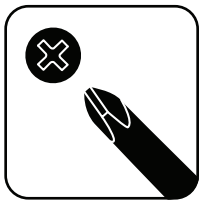

Note: Your machine may not match the image. For reference only.

1. Loosen and remove the screw (A) from the old Transport Wheel assembly (B), and set it safely aside for reassembly. Remove the old Transport Wheel assembly from the front stabilizer (C), and discard.

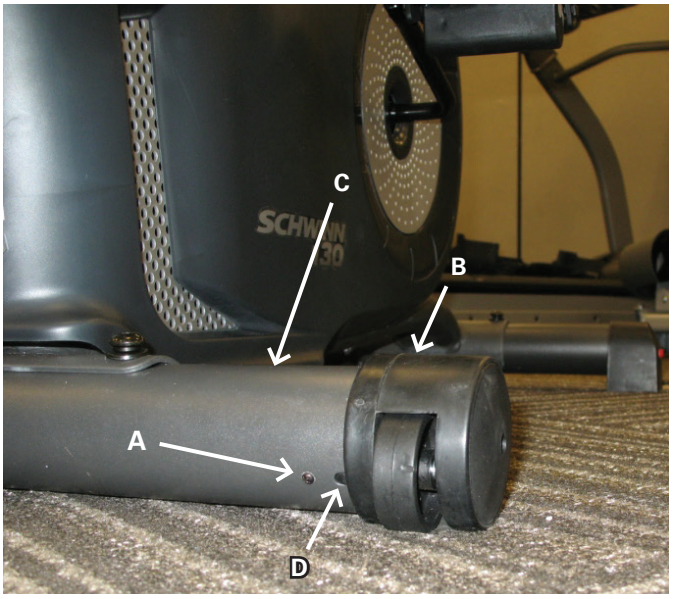

2. Install the replacement Transport Wheel assembly.

Note: Be sure the plastic alignment tab on the wheel assembly goes into the slot (D) at the end of the stabilizer tube.

3. Final Inspection

Inspect your machine to ensure that all hardware is tight and components are properly assembled.

Do not use until the machine has been fully assembled and inspected for correct performance in accordance with the Owner's Manual.

Replace the Shrouds on the Schwinn™ 230/270 and Journey 2.0/2.5 Bikes

Replacement Procedure
Skill Level: II
8006506.030123.E

NOTICE: This document provides instructions for the replacement of the Shrouds on the Schwinn™ 230/270 and Journey 2.0/2.5 Recumbent Bikes.

If you need assistance, please contact Customer Service (if purchased in US/Canada) or your local distributor (if purchased outside US/Canada). To find your local distributor, go to: www.nautilusinternational.com

This icon means a potentially hazardous situation which, if not avoided, could result in death or serious injury. Read and understand all Warnings on this machine.

Nautilus, Inc., (800) NAUTILUS / (800) 628-8458, www.NautilusInc.com - Customer Service: North America (800) 605-3369, csnls@nautilus.com | outside U.S. www.nautilusinternational.com | © 2013 Nautilus, Inc. | Schwinn is a trademark licensed to Nautilus, Inc., which is registered or otherwise protected by common law in the United States and other countries. | **ORIGINAL DOCUMENT - ENGLISH VERSION ONLY**

Important Safety Instructions - Before servicing or using this equipment, obey the following warnings:

This icon means a potentially hazardous situation which, if not avoided, could result in death or serious injury. Read and understand all Warnings on this machine.

Disconnect all power to the machine before you service it.

- Keep bystanders and children away from the product being serviced at all times.
- Make sure that the repair is done in an appropriate work space away from foot traffic and exposure to bystanders.
- Some components of the equipment can be heavy or awkward. Enlist the service of a second person when you do maintenance steps involving these components. Do not try to do heavy or awkward steps on your own.
- If replacement parts are necessary, use only genuine replacement parts and hardware supplied by Nautilus. Failure to use genuine replacement parts can cause a risk to users, keep the machine from operating correctly and void the warranty.
- Be sure that all warning stickers and instructional placards applied to the product stay present and in good condition when doing maintenance or replacing components. If at any time the Warning labels become loose, unreadable or dislodged, replace the labels. If purchased in US/Canada, contact Customer Service for replacement labels. If purchased outside US/Canada, contact your local distributor for them.
- Do not try to change the design or functionality of the machine being serviced as this can adversely affect user safety.
- Do not put the machine back in service until all shrouds, instructions, warning labels and correct functionality have been verified and tested for correct performance.

SAVE THESE INSTRUCTIONS.

Tools Required (not included)

#2 Phillips screwdriver

6mm hex wrench

Flathead screwdriver

13mm Wrench and socket (270)

Pedal wrench or 15mm open end wrench (230)
or crank puller (270)

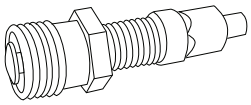

Adjustable wrench (270)

Disconnect all power to the machine before you service it.

Note: Your machine may not match the image. For reference only.

To remove the Main Shrouds, start at Step 1. To remove only the Rear Shrouds, go to Step 10.

1. Your machine has one of these Crank configurations. Please use the images to select your configuration:

230

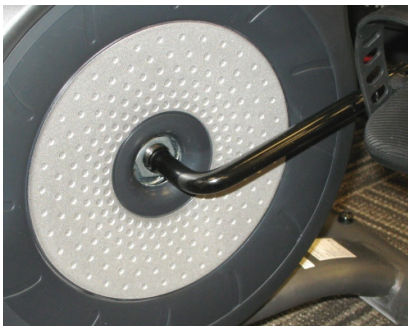

1-Piece Crank:
Go to Step 5.

270

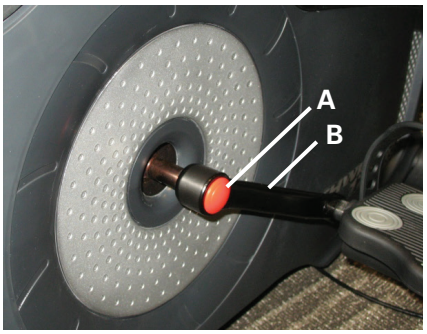

3-Piece Crank:
Using a flathead screwdriver, remove the threaded Cap (A) from the Crank Arm (B) to expose the Hex Head Bolt (C). Continue to Step 2.

2. Using a 13 mm wrench and socket, remove the Hex Head Bolt (C).

3. Thread the Crank Puller into the Crank Arm (B). When the Crank Puller is in the correct position, only 1-2 threads on the outer portion (CP2) of the Crank Puller should show.

Note: Be sure the end of the Bolt (CP1) of the Crank Puller is flush with the Nut (CP2) as shown, before use.

4. Using a wrench, turn the inner portion (CP3) of the Crank Puller clockwise. The Crank Arm (C) will slide off as it is tightened.
Go to Step 6.

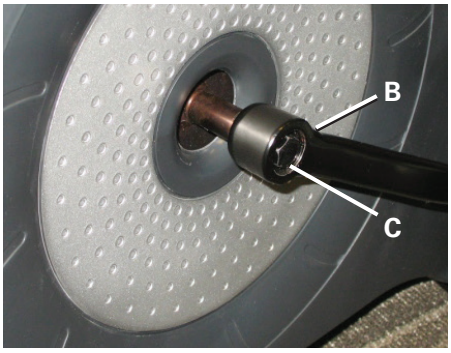

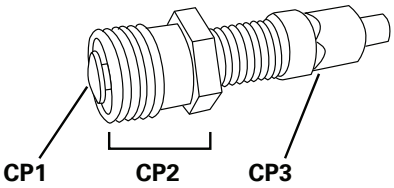

5. Loosen and remove the Pedals. Set them safely aside for reassembly.

Note: The Left Pedal is reverse-threaded.
Orientation is based from a seated position on the bike.
The Left Pedal has an "L", the Right Pedal an "R".

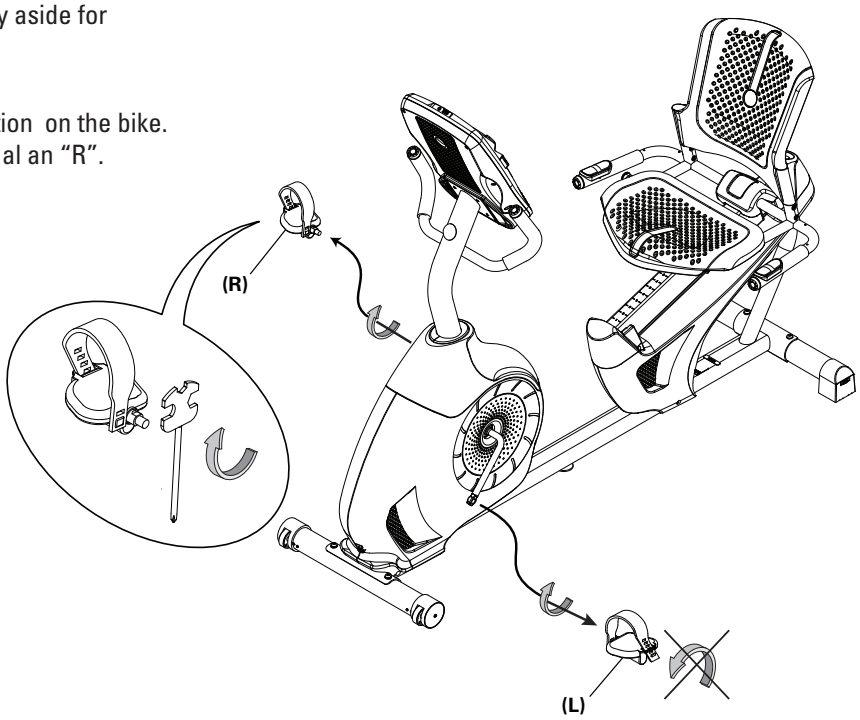

6. Bend the edges of the Top Shroud to disengage the inside tabs from the Main Assembly, and slide the Mast Gasket and Top Shroud up the Mast.

7. Remove the hardware (indicated) from the Mast. Gently pull the Mast out and disconnect the cables. Set the hardware, Mast and Console, and Top Shroud safely aside for reassembly.

NOTICE: Do not cut or pinch the cables. This step may require two people.

Note: Do not let the cables fall down inside the Frame.

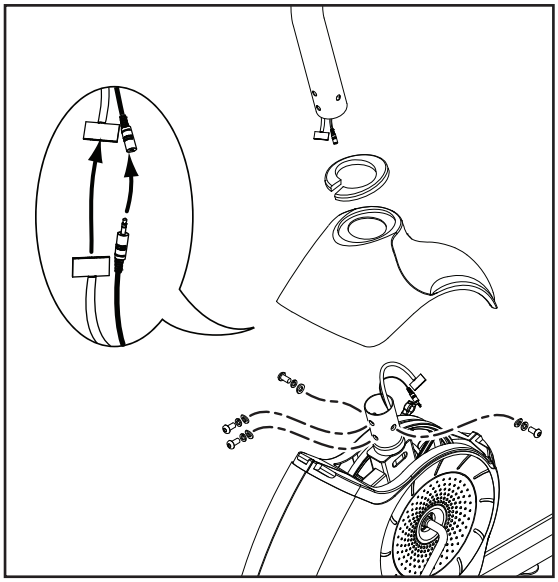

8. Using a #2 Phillips Screwdriver, remove the 6 screws (indicated) that secure the Left Main Shroud. Remove the bottom screws first, and then the top screws. Slowly remove the Left Main Shroud. Set the hardware and Shroud safely aside for reassembly.

Note: Find the Power Inlet (D) in the Left Shroud. Disconnect the Power Inlet cable (D1) from the wiring harness (E).

NOTICE: Be sure not to cut or pinch any cables.

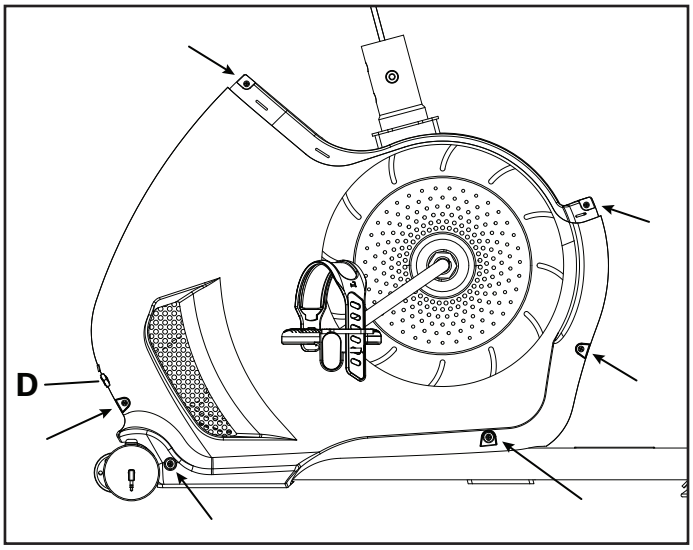

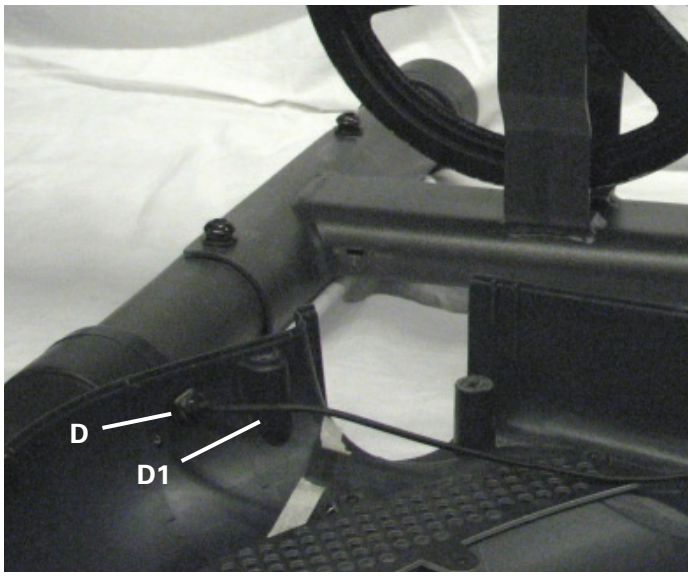

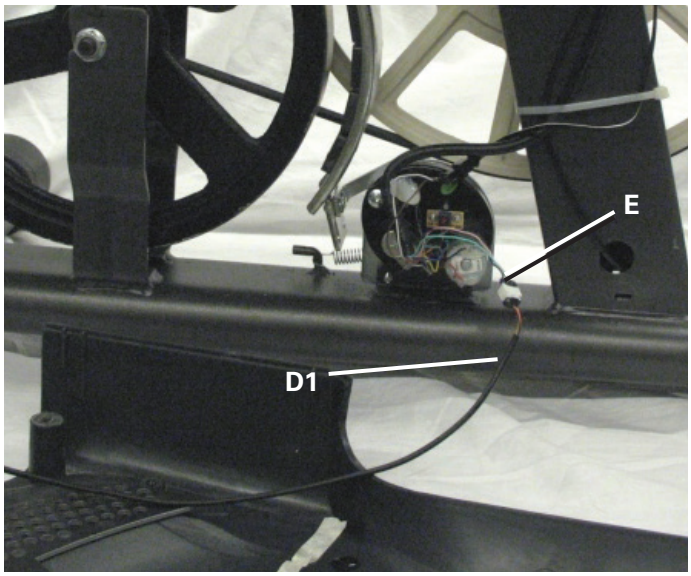

9. Using a #2 Phillips Screwdriver, remove the 2 screws that secure the Right Main Shroud. Slowly remove the Right Main Shroud. Set the hardware and Shroud safely aside for reassembly.

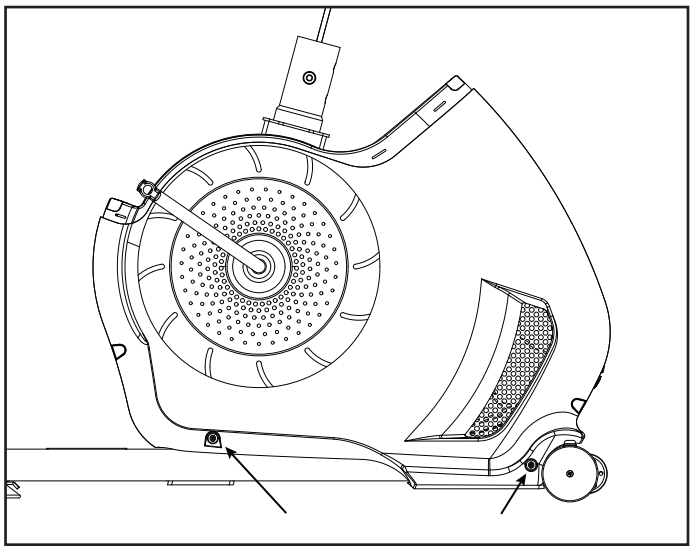

To remove the Rear Shrouds:.

10. Remove the Front and Rear Top Caps:

230 bike—Bend the edges of the Top Caps to disengage the inside tabs from the Main Assembly, and remove. Set the Top Caps safely aside for reassembly.

270 bike—Using a #2 Phillips Screwdriver, loosen and remove the screw that secures each Top Cap. Remove the Top Caps. Set the hardware and Top Caps safely aside for reassembly.

11. Using a #2 Phillips Screwdriver, remove the screws (indicated) that secure the Left Rear Shroud. Remove the bottom screws first, and then the top screws. Slowly remove the Left Shroud. Set the hardware and Left Shroud safely aside for reassembly.

12. Using a #2 Phillips Screwdriver, remove the screws that secure the Right Rear Shroud. Slowly remove the Right Shroud. Set the hardware and Right Shroud safely aside for reassembly.

13. Installation is the reverse procedure. Put the Left Shroud in postion first to align the screws for the Right Shroud. Install the top screws first.

Note: Self-tapping screws attach the Shrouds to the Frame.

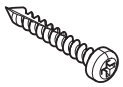

NOTICE: Be sure not to cut or pinch any cables. Be sure the tabs in the Top Shroud snap into the Main Assembly.

230 bike—To reinstall the Pedals, carefully align the threads and hand tighten to prevent cross-threading. Then tighten fully with pedal wrench.

Note: The Left Pedal is reverse-threaded. Orientation is based from a seated position on the bike. The Left Pedal has an "L", the Right Pedal an "R".

14. Final Inspection

Inspect your machine to ensure that all hardware is tight and components are properly assembled.

Do not use until the machine has been fully assembled and inspected for correct performance in accordance with the Owner's Manual.

230

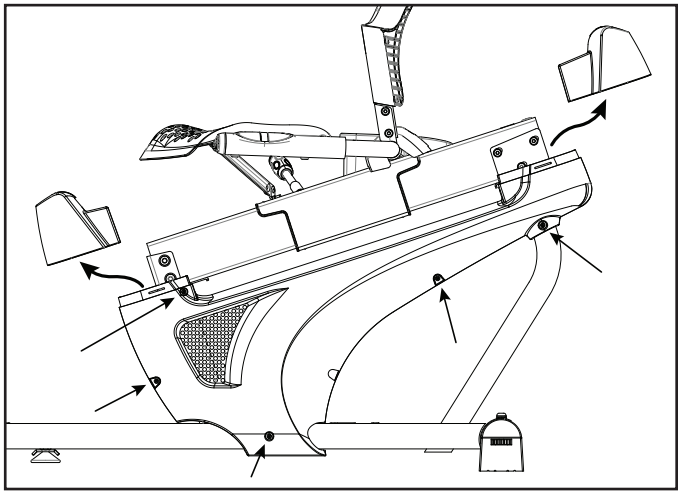

270

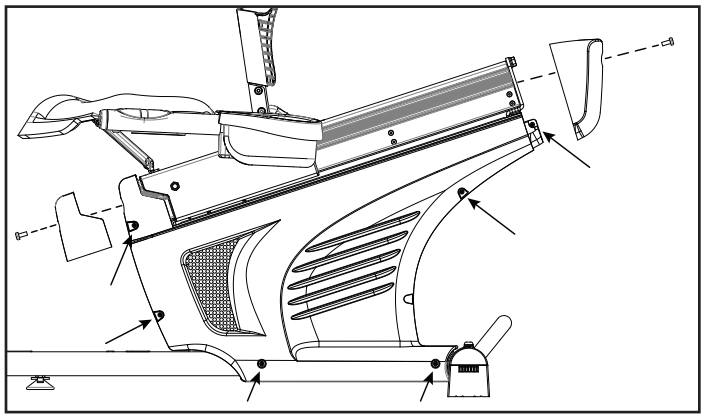

230

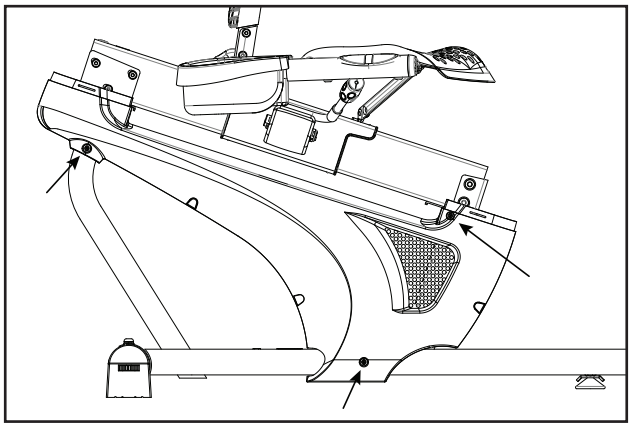

270

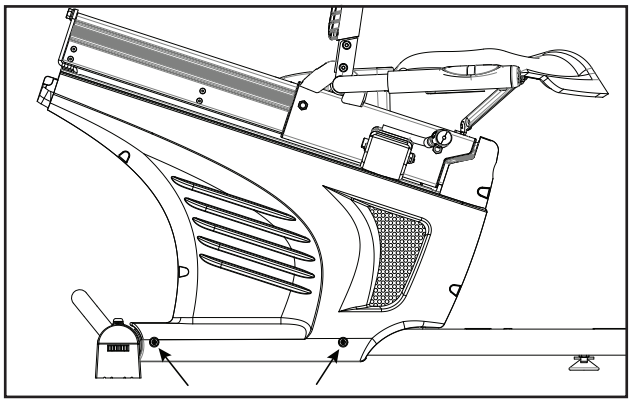

Replace the Console Mast on the Schwinn™ 230/270 and Journey 2.0/2.5 Bikes

Replacement Procedure
Skill Level: II
8006507.030123.E

NOTICE: This document provides instructions for the replacement of the Console Mast (Upright Handlebar Assembly) on the Schwinn™ 230/270 and Journey 2.0/2.5 Recumbent Bikes.

If you need assistance, please contact Customer Service (if purchased in US/Canada) or your local distributor (if purchased outside US/Canada). To find your local distributor, go to: www.nautilusinternational.com

This icon means a potentially hazardous situation which, if not avoided, could result in death or serious injury. Read and understand all Warnings on this machine.

Nautilus, Inc., (800) NAUTILUS / (800) 628-8458, www.NautilusInc.com - Customer Service: North America (800) 605-3369, csnls@nautilus.com | outside U.S. www.nautilusinternational.com | © 2013 Nautilus, Inc. | Schwinn is a trademark licensed to Nautilus, Inc., which is registered or otherwise protected by common law in the United States and other countries. | **ORIGINAL DOCUMENT - ENGLISH VERSION ONLY**

Important Safety Instructions - Before servicing or using this equipment, obey the following warnings:

This icon means a potentially hazardous situation which, if not avoided, could result in death or serious injury. Read and understand all Warnings on this machine.

Disconnect all power to the machine before you service it.

- Keep bystanders and children away from the product being serviced at all times.
- Make sure that the repair is done in an appropriate work space away from foot traffic and exposure to bystanders.
- Some components of the equipment can be heavy or awkward. Enlist the service of a second person when you do maintenance steps involving these components. Do not try to do heavy or awkward steps on your own.
- If replacement parts are necessary, use only genuine replacement parts and hardware supplied by Nautilus. Failure to use genuine replacement parts can cause a risk to users, keep the machine from operating correctly and void the warranty.
- Be sure that all warning stickers and instructional placards applied to the product stay present and in good condition when doing maintenance or replacing components. If at any time the Warning labels become loose, unreadable or dislodged, replace the labels. If purchased in US/Canada, contact Customer Service for replacement labels. If purchased outside US/Canada, contact your local distributor for them.
- Do not try to change the design or functionality of the machine being serviced as this can adversely affect user safety.
- Do not put the machine back in service until all shrouds, instructions, warning labels and correct functionality have been verified and tested for correct performance.

SAVE THESE INSTRUCTIONS.

Tools Required (not included)

#2 Phillips screwdriver

Small flathead screwdriver

6mm hex wrench

Disconnect all power to the machine before you service it.

Note: Your machine may not match the image. For reference only.

1. Remove screws that attach Console to the Mast. Carefully lift the Console off the Mast.

2. Disconnect the Data Cable and Heart Rate Cable from the back of the Console. Set the Console and screws safely aside for reassembly.

Note: Do not let the cables fall down inside the Mast or Frame.

3. Bend the edges of the Top Shroud to disengage the inside tabs from the Main Assembly, and slide the Mast Gasket and Top Shroud up the Mast.

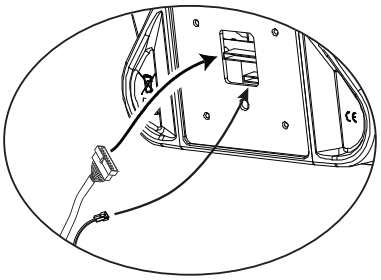

4. Remove the hardware (indicated) from the Mast. Gently pull the Mast out and disconnect the cables. Set the hardware, Mast Gasket and Top Shroud safely aside for reassembly. Discard the old Mast.

NOTICE: Do not cut or pinch the cables.
This step may require two people.

5. Installation is the reverse procedure.

NOTICE: Make sure the cable connectors do not fall into the Console Mast. Align the clips on the cable connectors and make sure the connectors lock. Do not crimp the cables. Be sure the tabs on the Top Shroud snap into the Main Assembly.

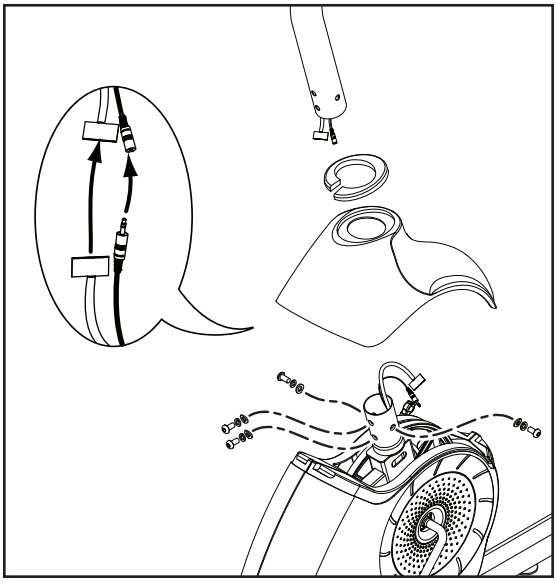

6. Connect the cables to the back of the Console and attach the Console to the Mast.

NOTICE: Do not cut or pinch the cables.

7. Final Inspection

Inspect your machine to ensure that all hardware is tight and components are properly assembled.

Do not use until the machine has been fully assembled and inspected for correct performance in accordance with the Owner's Manual.

Replace the Data Cable in Console Mast on the Schwinn™ 230/270 and Journey 2.0/2.5 Bikes

Replacement Procedure
Skill Level: II
8006508.030123.E

NOTICE: This document provides instructions for the replacement of the Data Cable in the Console Mast on the Schwinn™ 230/270 and Journey 2.0/2.5 Recumbent Bikes.

If you need assistance, please contact Customer Service (if purchased in US/Canada) or your local distributor (if purchased outside US/Canada). To find your local distributor, go to: www.nautilusinternational.com

This icon means a potentially hazardous situation which, if not avoided, could result in death or serious injury. Read and understand all Warnings on this machine.

Nautilus, Inc., (800) NAUTILUS / (800) 628-8458, www.NautilusInc.com - Customer Service: North America (800) 605-3369, csnls@nautilus.com | outside U.S. www.nautilusinternational.com | © 2013 Nautilus, Inc. | Schwinn is a trademark licensed to Nautilus, Inc., which is registered or otherwise protected by common law in the United States and other countries. | **ORIGINAL DOCUMENT - ENGLISH VERSION ONLY**

Important Safety Instructions - Before servicing or using this equipment, obey the following warnings:

This icon means a potentially hazardous situation which, if not avoided, could result in death or serious injury. Read and understand all Warnings on this machine.

Disconnect all power to the machine before you service it.

- Keep bystanders and children away from the product being serviced at all times.
- Make sure that the repair is done in an appropriate work space away from foot traffic and exposure to bystanders.
- Some components of the equipment can be heavy or awkward. Enlist the service of a second person when you do maintenance steps involving these components. Do not try to do heavy or awkward steps on your own.
- If replacement parts are necessary, use only genuine replacement parts and hardware supplied by Nautilus. Failure to use genuine replacement parts can cause a risk to users, keep the machine from operating correctly and void the warranty.
- Be sure that all warning stickers and instructional placards applied to the product stay present and in good condition when doing maintenance or replacing components. If at any time the Warning labels become loose, unreadable or dislodged, replace the labels. If purchased in US/Canada, contact Customer Service for replacement labels. If purchased outside US/Canada, contact your local distributor for them.
- Do not try to change the design or functionality of the machine being serviced as this can adversely affect user safety.
- Do not put the machine back in service until all shrouds, instructions, warning labels and correct functionality have been verified and tested for correct performance.

SAVE THESE INSTRUCTIONS.

Tools Required (not included)

#2 Phillips screwdriver

Small flathead screwdriver

6mm hex wrench

5’ (152 cm) length of string

Disconnect all power to the machine before you service it.

Note: Your machine may not match the image. For reference only.

1. Remove screws that attach Console to the Mast. Carefully lift the Console off the Mast.

2. Disconnect the Data Cable and Heart Rate (HR) Cable from the back of the Console. Set the Console and screws safely aside for reassembly.

Note: Do not let the cables fall down inside the Mast or Frame.

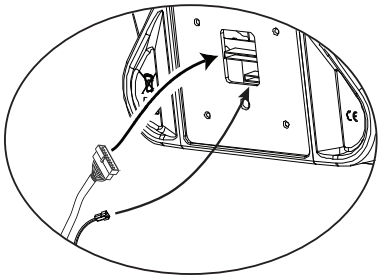

3. Remove the Mast Gasket. Set it safely aside for reassembly.

4. Bend the edges of the Top Shroud to disengage the inside tabs from the Main Assembly, and slide the Top Shroud up the Mast.

5. Remove the hardware (indicated) from the Mast. Gently pull the Mast out and disconnect the cables. Set the hardware safely aside for reassembly.

NOTICE: Do not cut or pinch the cables. This step may require two people.

Note: Do not let the cables fall down inside the Frame.

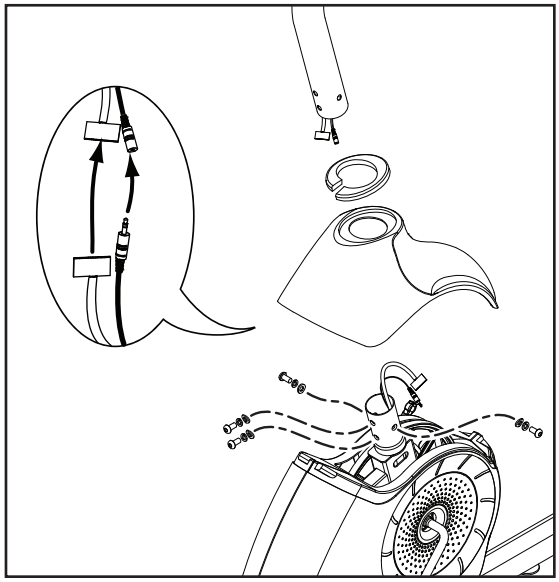

6. Tie the length of string to the end (A) of the Data Cable at the base of the Mast. Hold the other end of the Data Cable (B) and carefully pull it out of the Mast so that the string extends through the length of the Mast. Untie the string from the old Data Cable and discard the old cable.

NOTICE: Hold the HR Cable (C) so that you do not pull it out of the Mast. Do not cut or pinch the HR cable.

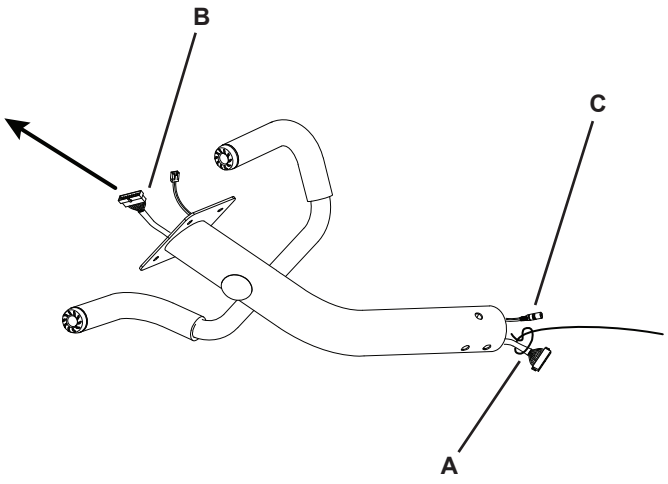

7. Tie the end of the string at the base of the Mast to one end of the replacement Data Cable. Hold the other end of the string and carefully pull the new Data Cable through the Mast.

NOTICE: Hold the HR Cable (C) so that you do not pull it out of the Mast. Do not cut or pinch the cables.

8. Untie the string from the Data Cable and connect the cable to the Data Cable from the Main Frame.

. *NOTICE:* Do not cut or pinch the cables. This step may require two people.

9. Put the Mast (with the Top Shroud) back in position in the Main Frame and reinstall the Hardware.

Note: Do not let the cables fall down inside the Mast.

NOTICE: Be sure not to cut or pinch any cables. This step may require two people.

10. Slide the Top Shroud back into position and and reinstall the Mast Gasket.

NOTICE: Be sure the tabs in the Top Shroud snap into the Main Assembly.

11. Connect the cables to the back of the Console and attach the Console to the Mast with the screws from Step 2.

NOTICE: Do not cut or pinch the cables.

12. Final Inspection

Inspect your machine to ensure that all hardware is tight and components are properly assembled.

Do not use until the machine has been fully assembled and inspected for correct performance in accordance with the Owner's Manual.

Replace the Heart Rate Cable in Console Mast on the Schwinn™ 230/270 and Journey 2.0/2.5 Bikes

Replacement Procedure
Skill Level: II
8006509.030123.E

NOTICE: This document provides instructions for the replacement of the Heart Rate (HR) Cable in the Console Mast on the Schwinn™ 230/270 and Journey 2.0/2.5 Recumbent Bikes.

If you need assistance, please contact Customer Service (if purchased in US/Canada) or your local distributor (if purchased outside US/Canada). To find your local distributor, go to: www.nautilusinternational.com

This icon means a potentially hazardous situation which, if not avoided, could result in death or serious injury. Read and understand all Warnings on this machine.

Nautilus, Inc., (800) NAUTILUS / (800) 628-8458, www.NautilusInc.com - Customer Service: North America (800) 605-3369, csnls@nautilus.com | outside U.S. www.nautilusinternational.com | © 2013 Nautilus, Inc. | Schwinn is a trademark licensed to Nautilus, Inc., which is registered or otherwise protected by common law in the United States and other countries. | **ORIGINAL DOCUMENT - ENGLISH VERSION ONLY**

Important Safety Instructions - Before servicing or using this equipment, obey the following warnings:

This icon means a potentially hazardous situation which, if not avoided, could result in death or serious injury. Read and understand all Warnings on this machine.

Disconnect all power to the machine before you service it.

- Keep bystanders and children away from the product being serviced at all times.
- Make sure that the repair is done in an appropriate work space away from foot traffic and exposure to bystanders.
- Some components of the equipment can be heavy or awkward. Enlist the service of a second person when you do maintenance steps involving these components. Do not try to do heavy or awkward steps on your own.
- If replacement parts are necessary, use only genuine replacement parts and hardware supplied by Nautilus. Failure to use genuine replacement parts can cause a risk to users, keep the machine from operating correctly and void the warranty.
- Be sure that all warning stickers and instructional placards applied to the product stay present and in good condition when doing maintenance or replacing components. If at any time the Warning labels become loose, unreadable or dislodged, replace the labels. If purchased in US/Canada, contact Customer Service for replacement labels. If purchased outside US/Canada, contact your local distributor for them.
- Do not try to change the design or functionality of the machine being serviced as this can adversely affect user safety.
- Do not put the machine back in service until all shrouds, instructions, warning labels and correct functionality have been verified and tested for correct performance.

SAVE THESE INSTRUCTIONS.

Tools Required (not included)

#2 Phillips screwdriver

Small flathead screwdriver

6mm hex wrench

5′ (152 cm) length of string

Disconnect all power to the machine before you service it.

Note: Your machine may not match the image. For reference only.

1. Remove screws that attach Console to the Mast. Carefully lift the Console off the Mast.

2. Disconnect the Data Cable and Heart Rate (HR) Cable from the back of the Console. Set the Console and screws safely aside for reassembly.

Note: Do not let the cables fall down inside the Mast.

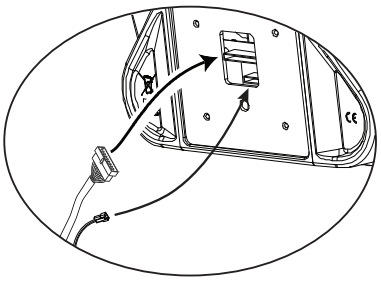

3. Remove the Mast Gasket. Set it safely aside for reassembly.

4. Bend the edges of the Top Shroud to disengage the inside tabs from the Main Assembly, and slide the Top Shroud up the Mast.

5. Remove the hardware (indicated) from the Mast. Gently pull the Mast out and disconnect the cables. Set the hardware safely aside for reassembly.

NOTICE: Do not cut or pinch the cables. This step may require two people.

Note: Do not let the cables fall down inside the Frame.

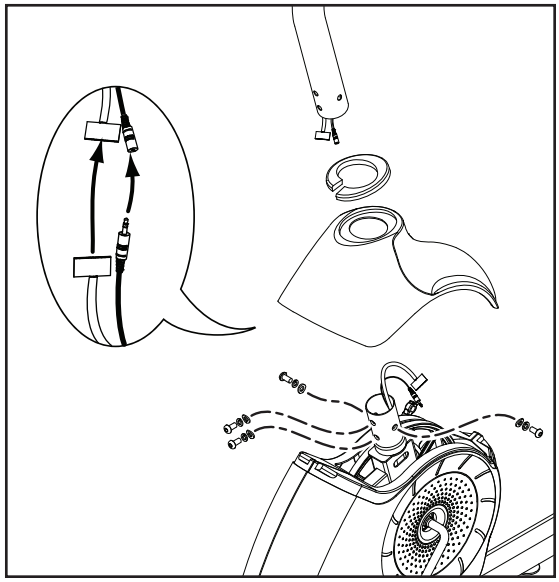

6. Tie the length of string to the end (A) of the HR Cable at the base of the Mast. Hold the other end of the HR Cable (B) and carefully pull it out of the Mast so that the string extends through the length of the Mast. Untie the string from the old HR Cable and discard the old cable.

NOTICE: Hold the Data Cable (C) so that you do not pull it out of the Mast. Do not cut or pinch the Data Cable.

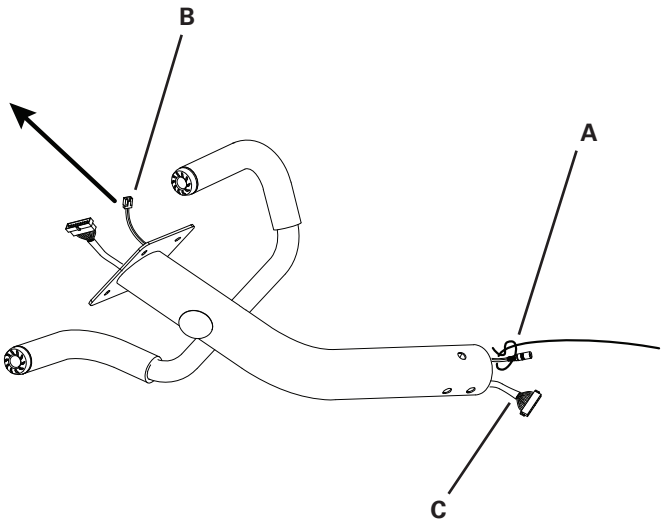

7. Tie the end of the string at the base of the Mast to one end of the replacement HR Cable. Hold the other end of the string and carefully pull the new HR Cable through the Mast.

NOTICE: Hold the Data Cable (C) so that you do not pull it out of the Mast. Do not cut or pinch the cables.

8. Untie the string from the HR Cable and connect the cable to the HR Cable from the Main Frame.

. *NOTICE:* Do not cut or pinch the cables. This step may require two people.

9. Put the Mast (with the Top Shroud) back in position in the Main Frame and reinstall the Hardware.

Note: Do not let the cables fall down inside the Mast.

NOTICE: Be sure not to cut or pinch any cables. This step may require two people.

10. Slide the Top Shroud back into position and and reinstall the Mast Gasket.

NOTICE: Be sure the tabs in the Top Shroud snap into the Main Assembly.

11. Connect the cables to the back of the Console and attach the Console to the Mast with the screws from Step 2.

NOTICE: Do not cut or pinch the cables.

12. Final Inspection

Inspect your machine to ensure that all hardware is tight and components are properly assembled.

Do not use until the machine has been fully assembled and inspected for correct performance in accordance with the Owner's Manual.

Replace the Seat Rail Assembly on the Schwinn™ 270 and Journey 2.5 Bikes

Replacement Procedure
Skill Level: II
8024444.030123.B

NOTICE: This document provides instructions for the replacement of the Seat Rail and Seat Slider Assembly on the Schwinn™ 270 and Journey 2.5 Recumbent Bikes.

If you need assistance, please contact Customer Service (if purchased in US/Canada) or your local distributor (if purchased outside US/Canada). To find your local distributor, go to: www.nautilusinternational.com

This icon means a potentially hazardous situation which, if not avoided, could result in death or serious injury. Read and understand all Warnings on this machine.

Nautilus, Inc., (800) NAUTILUS / (800) 628-8458, www.NautilusInc.com - Customer Service: North America (800) 605-3369, csnls@nautilus.com | outside U.S. www.nautilusinternational.com | © 2019 Nautilus, Inc. | Schwinn is a trademark licensed to Nautilus, Inc., which is registered or otherwise protected by common law in the United States and other countries. | **ORIGINAL DOCUMENT - ENGLISH VERSION ONLY**

Important Safety Instructions - Before servicing or using this equipment, obey the following warnings:

This icon means a potentially hazardous situation which, if not avoided, could result in death or serious injury. Read and understand all Warnings on this machine.

Disconnect all power to the machine before you service it.

- Keep bystanders and children away from the product being serviced at all times.
- Make sure that the repair is done in an appropriate work space away from foot traffic and exposure to bystanders.
- Some components of the equipment can be heavy or awkward. Enlist the service of a second person when you do maintenance steps involving these components. Do not try to do heavy or awkward steps on your own.
- If replacement parts are necessary, use only genuine replacement parts and hardware supplied by Nautilus. Failure to use genuine replacement parts can cause a risk to users, keep the machine from operating correctly and void the warranty.
- Be sure that all warning stickers and instructional placards applied to the product stay present and in good condition when doing maintenance or replacing components. If at any time the Warning labels become loose, unreadable or dislodged, replace the labels. If purchased in US/Canada, contact Customer Service for replacement labels. If purchased outside US/Canada, contact your local distributor for them.
- Do not try to change the design or functionality of the machine being serviced as this can adversely affect user safety.
- Do not put the machine back in service until all shrouds, instructions, warning labels and correct functionality have been verified and tested for correct performance.

SAVE THESE INSTRUCTIONS.

Tools Required (not included)

#2 Phillips screwdriver

13mm open end wrench

6mm hex wrench
4mm hex wrench

Disconnect all power to the machine before you service it.

Note: Your machine may not match the image. For reference only.

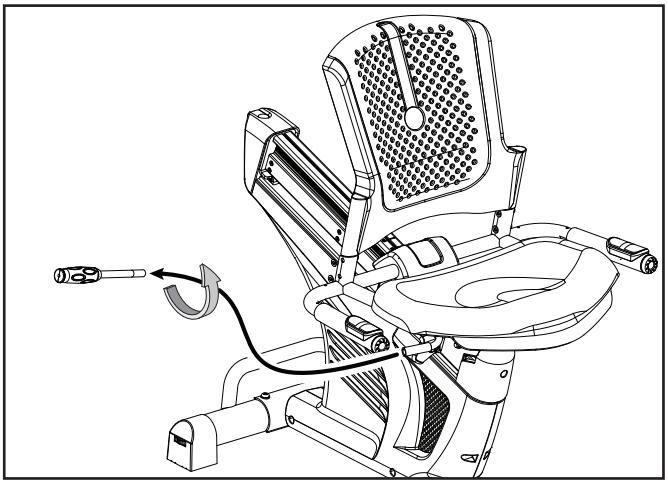

1. Remove the Seat Adjustment Handle from the seat slider assembly. Set the Seat Adjustment Handle safely aside for reassembly.

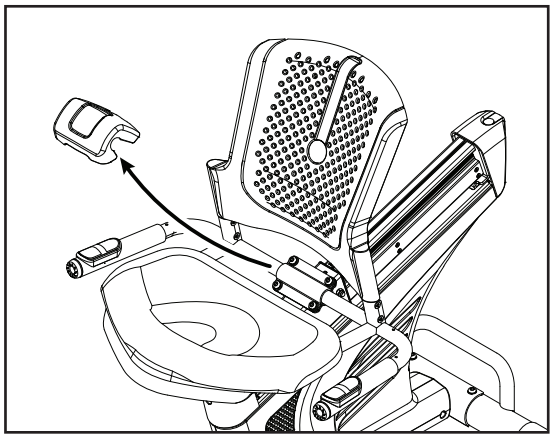

2. Carefully remove the Top Cap from the seat slider bracket, and disconnect the Heart Rate Cables.

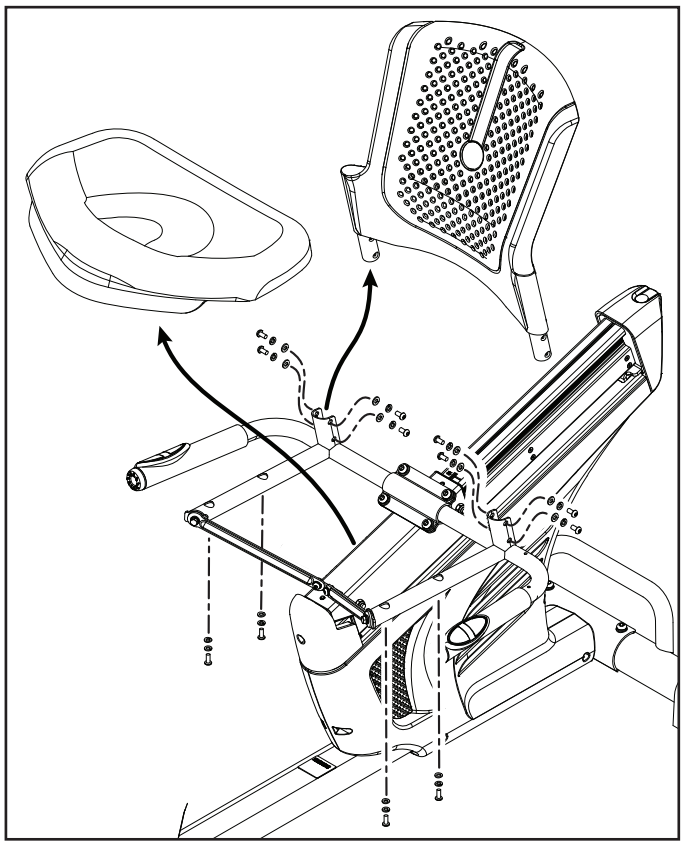

3. Using a #2 Phillips Screwdriver, loosen and remove the hardware that attaches the padded Seat Bottom to the Seat Frame Assembly. Set the hardware safely aside for reassembly.

4. Remove the Seat Bottom from the Seat Frame Assembly and set it safely aside.

5. Using a 4mm hex wrench, loosen and remove the hardware that attaches the Seat Back to the Seat Frame assembly, and remove the Seat Back. Set the Seat Back and hardware safely aside.

NOTICE: This step may require two people.

6. Carefully disconnect the Heart Rate Cables.

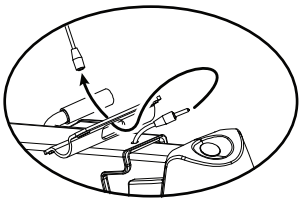

7. Using a 4mm hex wrench, remove the bolts from the bracket arms at the front of the Seat Frame. Using a 6mm hex wrench, remove the 4 bolts from the back of the Seat Frame. Remove the Seat Frame Assembly. Set the hardware and Seat Frame Assembly safely aside.

NOTICE: Do not cut or pinch any cables.This step may require two people.

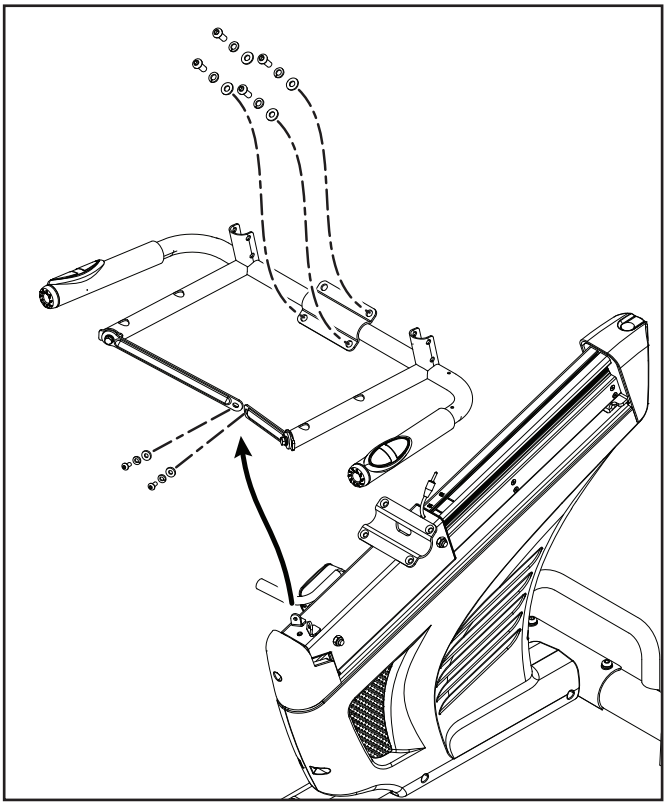

8. Using a #2 Phillips screwdriver, loosen and remove the screw that secures the front Seat Rail End Cap. Bend the edges of the rear Seat Rail End Cap to disengage the inside tabs from the Main Assembly, and remove. Set the hardware and Caps safely aside for reassembly.

9. Using a #2 Phillips screwdriver, remove the screws (indicated) that secure the Left Rear Shroud. Remove the bottom screws first, and then the top screws. Slowly remove the Left Shroud. Set the hardware and Left Shroud safely aside for reassembly.

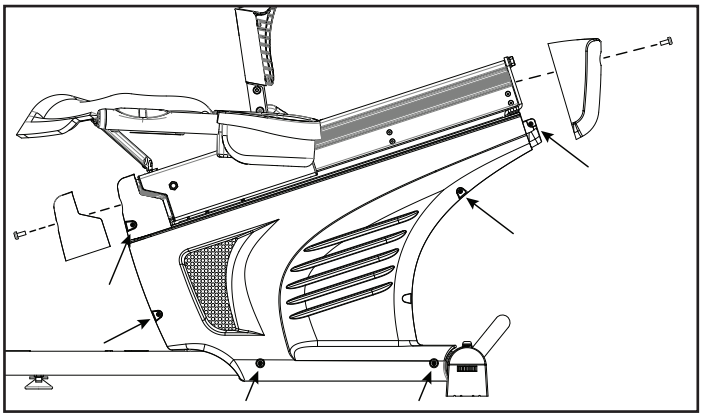

10. Using a #2 Phillips screwdriver, remove the screws that secure the Right Rear Shroud. Slowly remove the Right Shroud. Set the hardware and Right Shroud safely aside for reassembly.

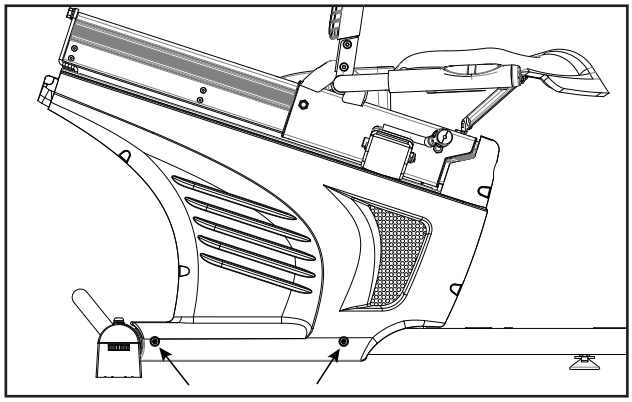

11. Using a 13mm open end wrench, loosen and remove the indicated hardware at the back of the Seat Rail.

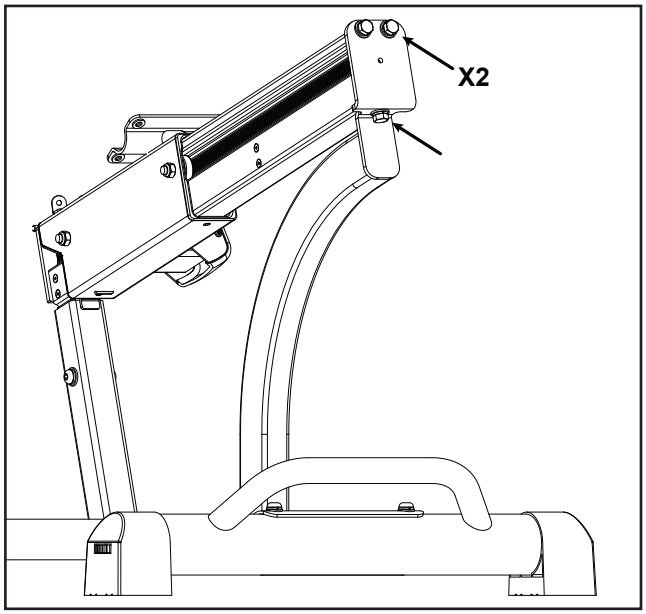

12. Using a 6mm hex wrench, loosen and remove the indicated hardware at the front of the Seat Rail. Set the hardware safely aside.

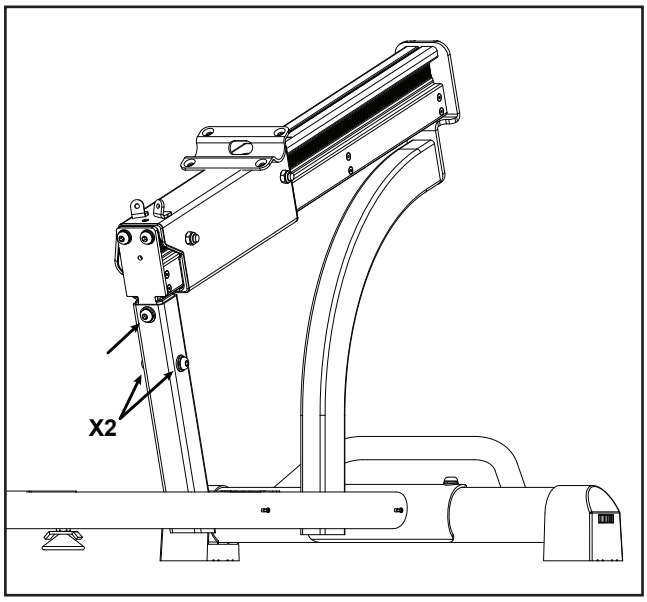

13. Carefully disconnect the HR cables in the Seat Rail Assembly and the Frame. Carefully remove the Seat Rail Assembly from the Frame and set it safely aside.

NOTICE: Do not cut or pinch any cables.This step may require two people.

14. Installation is the reverse procedure.

NOTICE: Be sure not to cut or pinch any cables.Hand tighten all hardware first, then fully tighten it.

Put the Left Shroud in position first to align the screws for the Right Shroud. Install the top screws first.

Note: Self-tapping screws attach the Shrouds to the Frame.

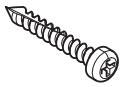

NOTICE: Hand tighten all hardware first, then fully tighten it. Be sure the cables are tucked inside the Top Cap.

15. Final Inspection

Inspect your machine to ensure that all hardware is tight and components are properly assembled.

Do not use until the machine has been fully assembled and inspected for correct performance in accordance with the Owner's Manual.

Replace the Brake Assembly on the Schwinn™ 230/270 and Journey 2.0/2.5 Bikes

Replacement Procedure
Skill Level: III
8006510.030123.E

NOTICE: This document provides instructions for the replacement of the Brake Assembly on the Schwinn™ 230/270 and Journey 2.0/2.5 Recumbent Bikes.

If you need assistance, please contact Customer Service (if purchased in US/Canada) or your local distributor (if purchased outside US/Canada). To find your local distributor, go to: www.nautilusinternational.com

This icon means a potentially hazardous situation which, if not avoided, could result in death or serious injury. Read and understand all Warnings on this machine.

Nautilus, Inc., (800) NAUTILUS / (800) 628-8458, www.NautilusInc.com - Customer Service: North America (800) 605-3369, csnls@nautilus.com | outside U.S. www.nautilusinternational.com | © 2013 Nautilus, Inc. | Schwinn is a trademark licensed to Nautilus, Inc., which is registered or otherwise protected by common law in the United States and other countries. | **ORIGINAL DOCUMENT - ENGLISH VERSION ONLY**

Important Safety Instructions - Before servicing or using this equipment, obey the following warnings:

This icon means a potentially hazardous situation which, if not avoided, could result in death or serious injury. Read and understand all Warnings on this machine.

Disconnect all power to the machine before you service it.

- Keep bystanders and children away from the product being serviced at all times.
- Make sure that the repair is done in an appropriate work space away from foot traffic and exposure to bystanders.
- Some components of the equipment can be heavy or awkward. Enlist the service of a second person when you do maintenance steps involving these components. Do not try to do heavy or awkward steps on your own.
- If replacement parts are necessary, use only genuine replacement parts and hardware supplied by Nautilus. Failure to use genuine replacement parts can cause a risk to users, keep the machine from operating correctly and void the warranty.
- Be sure that all warning stickers and instructional placards applied to the product stay present and in good condition when doing maintenance or replacing components. If at any time the Warning labels become loose, unreadable or dislodged, replace the labels. If purchased in US/Canada, contact Customer Service for replacement labels. If purchased outside US/Canada, contact your local distributor for them.
- Do not try to change the design or functionality of the machine being serviced as this can adversely affect user safety.
- Do not put the machine back in service until all shrouds, instructions, warning labels and correct functionality have been verified and tested for correct performance.

SAVE THESE INSTRUCTIONS.

Tools Required (not included)

#2 Phillips screwdriver

Needlenose pliers

Small flathead screwdriver

13 mm open end wrench

Pedal wrench or 15mm open end wrench (230)
or crank puller (270)

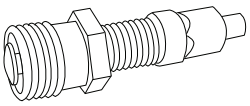

2.5" x 10" cardboard and tape

Safety goggles or other eye protection

NOTICE: It is necessary to remove the Shrouds for this procedure. Refer to the "Replace the Shrouds" procedure.
It may be necessary to adjust the Brake tension at the end of this procedure. Refer to the "Set the Brake Tension" procedure.

Disconnect all power to the machine before you service it.

Note: Your machine may not match the image. For reference only.

1. Carefully remove the Shrouds. Refer to the "Replace the Shrouds" procedure.

2. Insert 2.5" x 10" cardboard between the Brake Magnet (A) and the Flywheel (B), and tape the cardboard to the Brake Magnet.

Note: Be sure the cardboard covers all of the Brake Magnet.

3. Use the pliers to unhook the Tension Spring (C) from the Main Frame. Pull back and release the Magnet Arm (D) enough to disengage it from the Motor Pulley Shaft (E).

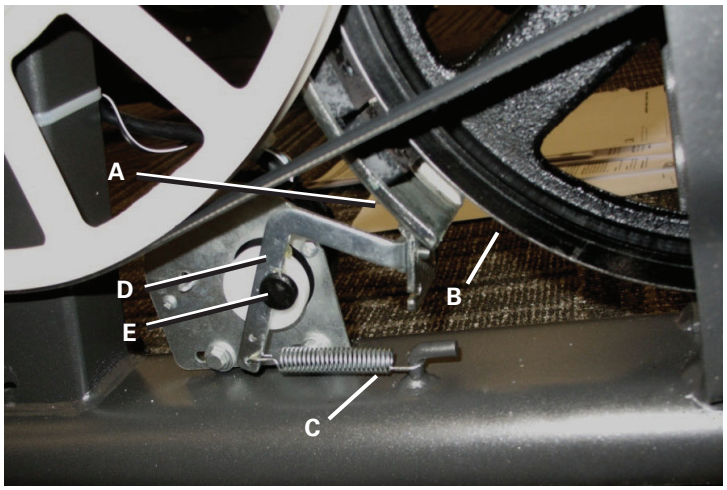

4. Loosen and remove the hex head bolt (F), nut (G) and washer (H) that attach the Brake Assembly (A) to the Main Frame bracket (J).

NOTICE: Hold the Brake Assembly so that it does not fall.
Do not cut or pinch the cables

5. Remove the Brake Assembly (A). Remove the cardboard. Discard the old Brake Assembly.

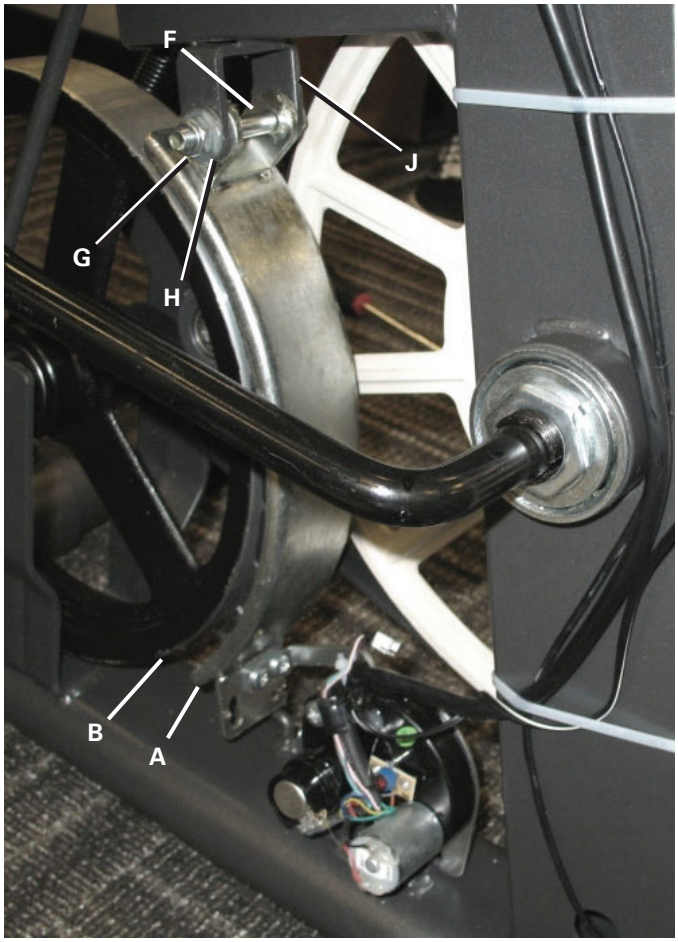

6. Installation is the reverse procedure. Tape the cardboard to the new Brake Magnet. Be sure the cardboard will completely cover the new Brake Magnet before installation.

NOTICE: Do not cut or pinch the cables.

7. Before fully attaching the Shrouds, remove the cardboard from between the Brake Magnet (A) and the Flywheel (B). Power up the machine to verify that the Magnet Arm can move freely, and that the Brake Magnet and Flywheel do not touch at the maximum resistance level.

Machine is on. Current is active. There is risk of electrical shock.

If necessary, refer to the "Set the Brake Tension" procedure.

8. Final Inspection

Inspect your machine to ensure that all hardware is tight and components are properly assembled.

Do not use until the machine has been fully assembled and inspected for correct performance in accordance with the Owner's Manual.

Replace the Servo Motor on the Schwinn™ 230/270 and Journey 2.0/2.5 Bikes

Replacement Procedure
Skill Level: III
8006511.030123.E

NOTICE: This document provides instructions for the replacement of the Servo Motor on the Schwinn™ 230/270 and Journey 2.0/2.5 Recumbent Bikes.

If you need assistance, please contact Customer Service (if purchased in US/Canada) or your local distributor (if purchased outside US/Canada). To find your local distributor, go to: www.nautilusinternational.com

This icon means a potentially hazardous situation which, if not avoided, could result in death or serious injury. Read and understand all Warnings on this machine.

Nautilus, Inc., (800) NAUTILUS / (800) 628-8458, www.NautilusInc.com - Customer Service: North America (800) 605-3369, csnls@nautilus.com | outside U.S. www.nautilusinternational.com | © 2013 Nautilus, Inc. | Schwinn is a trademark licensed to Nautilus, Inc., which is registered or otherwise protected by common law in the United States and other countries. | **ORIGINAL DOCUMENT - ENGLISH VERSION ONLY**

Important Safety Instructions - Before servicing or using this equipment, obey the following warnings:

This icon means a potentially hazardous situation which, if not avoided, could result in death or serious injury. Read and understand all Warnings on this machine.

Disconnect all power to the machine before you service it.

- Keep bystanders and children away from the product being serviced at all times.
- Make sure that the repair is done in an appropriate work space away from foot traffic and exposure to bystanders.
- Some components of the equipment can be heavy or awkward. Enlist the service of a second person when you do maintenance steps involving these components. Do not try to do heavy or awkward steps on your own.
- If replacement parts are necessary, use only genuine replacement parts and hardware supplied by Nautilus. Failure to use genuine replacement parts can cause a risk to users, keep the machine from operating correctly and void the warranty.
- Be sure that all warning stickers and instructional placards applied to the product stay present and in good condition when doing maintenance or replacing components. If at any time the Warning labels become loose, unreadable or dislodged, replace the labels. If purchased in US/Canada, contact Customer Service for replacement labels. If purchased outside US/Canada, contact your local distributor for them.
- Do not try to change the design or functionality of the machine being serviced as this can adversely affect user safety.
- Do not put the machine back in service until all shrouds, instructions, warning labels and correct functionality have been verified and tested for correct performance.

SAVE THESE INSTRUCTIONS.

Tools Required (not included)

#2 Phillips screwdriver

Needlenose pliers

Small flathead screwdriver

7 mm open end wrench

Pedal wrench or 15mm open end wrench (230)
or crank puller (270)

3′ (0.9m) length of string

2.5″ x 10″ cardboard and tape

Utility knife or scissors to cut zipties
Zipties

Safety goggles or other eye protection

NOTICE: It is necessary to remove the Shrouds for this procedure. Refer to the "Replace the Shrouds" procedure.
It may be necessary to adjust the Brake tension at the end of this procedure. Refer to the "Set the Brake Tension" procedure.

Disconnect all power to the machine before you service it.

Note: Your machine may not match the image. For reference only.

1. Disconnect and reconnect the AC Adapter from the wall outlet to turn the power off and on. Push QuickStart and verify that the console shows that the default resistance level is 4. Set the resistance to the highest level.

Disconnect all power and allow to sit for 5 minutes.

2. Carefully remove the Shrouds. Refer to the "Replace the Shrouds" procedure in this manual.

3. Measure and mark the position of the Servo Motor bracket (A) on the Main Frame.

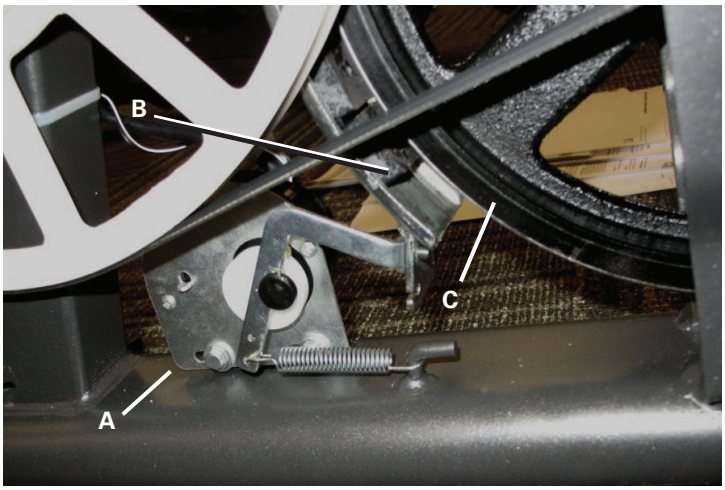

4. Insert 2.5" x 10" cardboard between the Brake Magnet (B) and the Flywheel (C), and tape the cardboard to the Brake Magnet.

Note: Be sure the cardboard covers all of the Brake Magnet.

5. Observe the cable routing to the wiring harness (F) on your machine. Disconnect the Speed Sensor Cable (D) and Power Inlet Cable (E) from the wiring harness.

6. Tie the length of string to the end of the lower Console Cable (G) at the top of the Mast mount. Remove the zipties that attach the lower Console Cable to the Frame. Pull the cable and string down through the hole (H) on the side of the Frame so that the string extends through the Frame.

Note: Do not let the HR Cable (I) fall down inside the Frame.

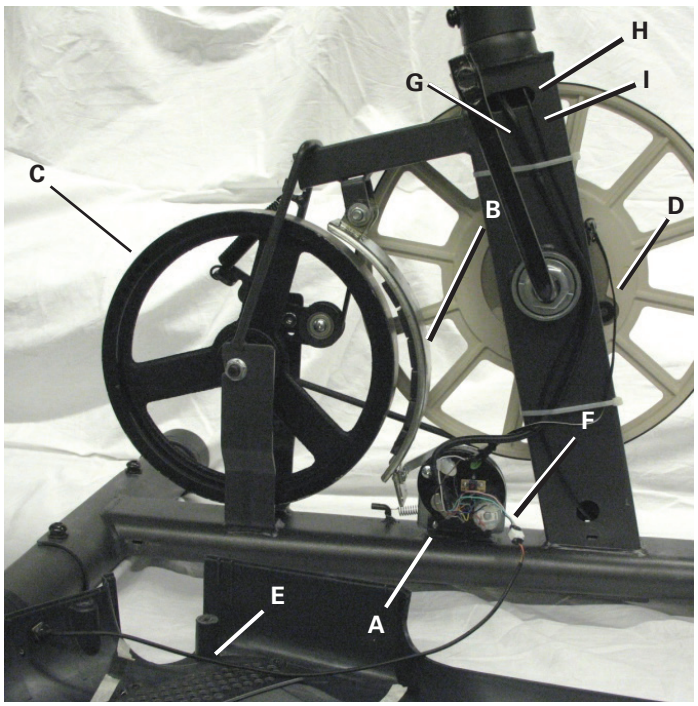

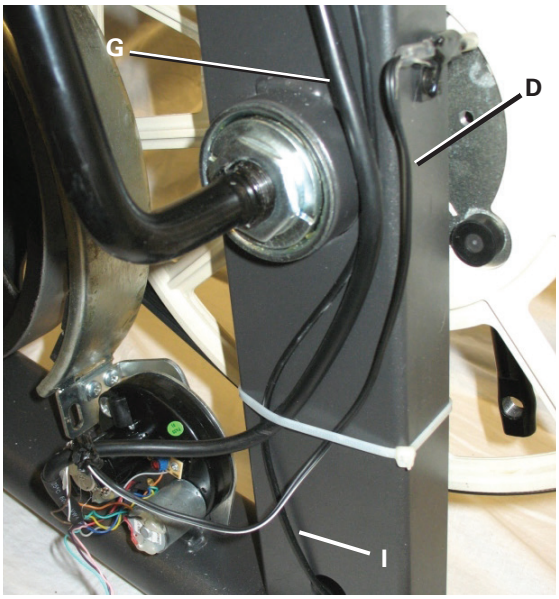

7. Untie the string from the Console Cable (G).

8. Use the pliers to unhook the Tension Spring (J) from the Main Frame. Pull back and release the Magnet Arm (K) enough to disengage it from the Motor Pulley Shaft (L).

9. Loosen and remove the two hex head bolts (M) from the Servo Motor (A).

10. Remove the Servo Motor (A). Discard the old Servo Motor.

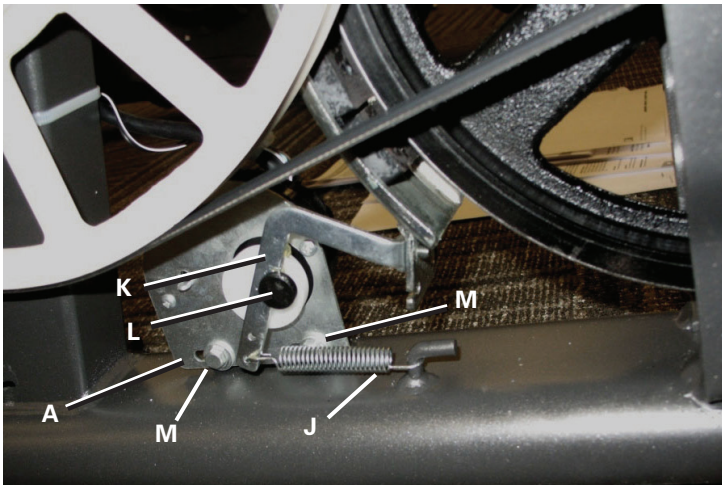

11. Installation is the reverse procedure. Adjust the new Servo Motor to same position recorded in Step 3.

NOTICE: Do not touch the Potentiometer (N). Do not cut or pinch any cables.

12. Tie the end of the string at the hole (H) in the Mast to the end of the Console Cable (G) on the new Servo Motor (A). Carefully pull the cable through the hole to the top of the Mast mount. Untie the string and discard it.

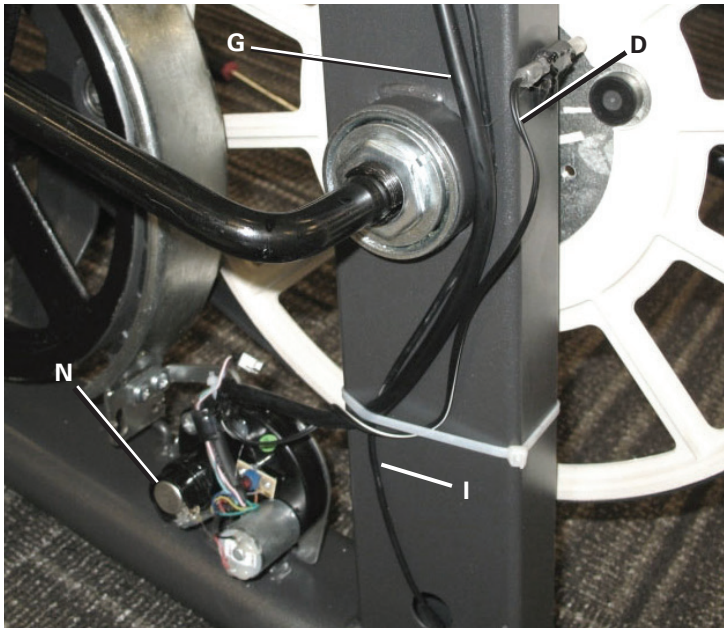

13. Reinstall the Mast, Console and Top Shroud. (Refer to the "Replace the Shrouds" procedure.) Turn the power on.

Machine is on. Current is active. There is risk of electrical shock.

14. Use the console to set the resistance to the highest level. Unplug the machine.

Disconnect all power and allow to sit for 5 minutes.

15. Put the Brake Arm (K) back in position and connect the Tension Spring (J) with the needlenose pliers.

Note: Before fully attaching the Shrouds, remove the cardboard from between the Brake Magnet (B) and the Flywheel (C). Power up the machine to verify that the Magnet Arm can move freely, and that the Brake Magnet and Flywheel do not touch at the maximum resistance level. If necessary, refer to the "Set the Brake Tension" procedure.

16. Final Inspection

Inspect your machine to ensure that all hardware is tight and components are properly assembled.

Do not use until the machine has been fully assembled and inspected for correct performance in accordance with the Owner's Manual.

Replace the Drive Belt and Flywheel Assembly on the Schwinn™ 130/170/230/270 and Journey 1.0/1.5/2.0/2.5 Bikes

Replacement Procedure
Skill Level: II
8006500.030123.F

NOTICE: This document provides instructions for the replacement of the Drive Belt on the Schwinn™ 130/170 Upright Bikes, 230/270 Recumbent Bikes, Journey 1.0/1.5 Upright Bikes and Journey 2.0/2.5 Recumbent Bikes Bikes.

If you need assistance, please contact Customer Service (if purchased in US/Canada) or your local distributor (if purchased outside US/Canada). To find your local distributor, go to: www.nautilusinternational.com

This icon means a potentially hazardous situation which, if not avoided, could result in death or serious injury. Read and understand all Warnings on this machine.

Nautilus, Inc., (800) NAUTILUS / (800) 628-8458, www.NautilusInc.com - Customer Service: North America (800) 605-3369, csnls@nautilus.com | outside U.S. www.nautilusinternational.com | © 2013 Nautilus, Inc. | Schwinn is a trademark licensed to Nautilus, Inc., which is registered or otherwise protected by common law in the United States and other countries. | **ORIGINAL DOCUMENT - ENGLISH VERSION ONLY**

Important Safety Instructions - Before servicing or using this equipment, obey the following warnings:

This icon means a potentially hazardous situation which, if not avoided, could result in death or serious injury. Read and understand all Warnings on this machine.

Disconnect all power to the machine before you service it.

- Keep bystanders and children away from the product being serviced at all times.
- Make sure that the repair is done in an appropriate work space away from foot traffic and exposure to bystanders.
- Some components of the equipment can be heavy or awkward. Enlist the service of a second person when you do maintenance steps involving these components. Do not try to do heavy or awkward steps on your own.
- If replacement parts are necessary, use only genuine replacement parts and hardware supplied by Nautilus. Failure to use genuine replacement parts can cause a risk to users, keep the machine from operating correctly and void the warranty.
- Be sure that all warning stickers and instructional placards applied to the product stay present and in good condition when doing maintenance or replacing components. If at any time the Warning labels become loose, unreadable or dislodged, replace the labels. If purchased in US/Canada, contact Customer Service for replacement labels. If purchased outside US/Canada, contact your local distributor for them.
- Do not try to change the design or functionality of the machine being serviced as this can adversely affect user safety.
- Do not put the machine back in service until all shrouds, instructions, warning labels and correct functionality have been verified and tested for correct performance.

SAVE THESE INSTRUCTIONS.

Tools Required (not included)

#2 Phillips screwdriver

Small flathead screwdriver

Pedal wrench or 15mm open end wrench (130/230)
or crank puller (170/270)

Needlenose pliers

15mm open end wrench

13mm socket and wrench (170/270)
15mm socket and wrench

Safety goggles or other eye protection

NOTICE: It is necessary to remove the Shrouds for this procedure. Refer to the "Replace the Shrouds" procedure.
It is necessary to adjust the Drive Belt tension at the end of this procedure. Refer to the "Belt Tension Adjustment" procedure

Disconnect all power to the machine before you service it.

Note: Your machine may not match the image. For reference only.

1. Carefully remove the Shrouds. Refer to the "Replace the Shrouds" procedure in this manual.

2. Slowly turn the Drive Pulley (A) backward and carefully ease the Drive Belt (B) off the Drive Pulley to the outside.

Be sure to keep fingers clear of all pinch hazards as you turn the Drive Pulley.

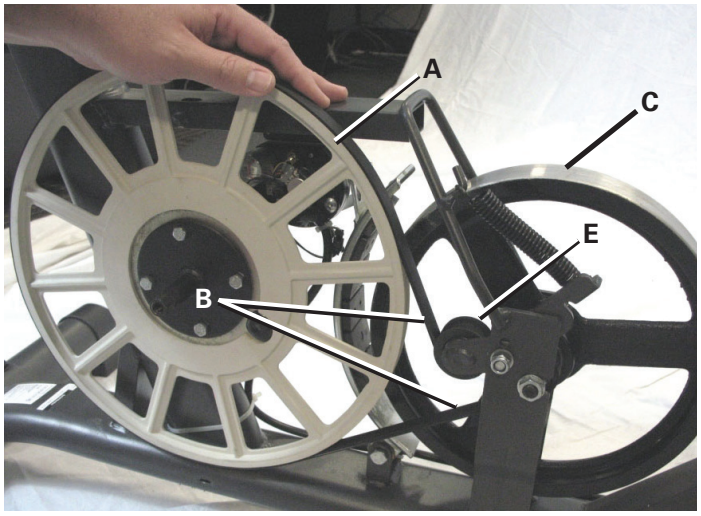

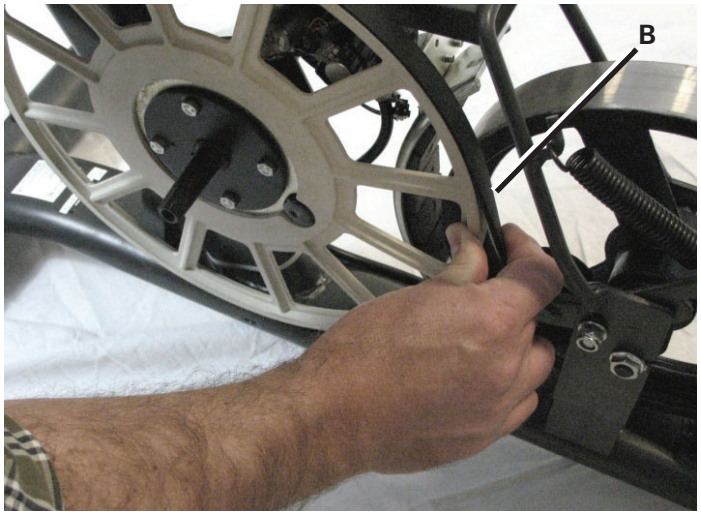

3. Using needlenose pliers, carefully release the spring (E1) on the Belt Tensioner (E).

4. To remove the hardware from the Flywheel (C), use the 15 mm open end wrench to hold the nut (F) on one side steady and remove the nut on the opposite side with the 15 mm socket and wrench. Set the hardware safely aside.

5. Remove the Flywheel (C) from the Main Frame brackets (G) and the Drive Belt (B).

Note: The Flywheel is heavy.

6. Remove the old Drive Belt (B) and discard it.

7. Hold the Flywheel (C) near the Main Frame brackets (G) and put the new Drive Belt (B) in position on the Flywheel pulley (C1). Put the Drive Belt in position around the Belt Tensioner (E). Be sure that the upper portion of the Drive Belt is under the bearings on the Belt Tensioner.

NOTICE: This step may require two people.

8. Align the Flywheel axle in the Main Frame brackets (G). Hand tighten the hardware from step 4 on each end of the Flywheel axle.

9. Put the Drive Belt (B) onto the Drive Pulley (A). Make sure the Drive Belt is aligned on the Flywheel pulley (C1), Belt Tensioner (E) and Drive Pulley.

10. Before you fully tighten the Flywheel hardware, reattach the Belt Tensioner spring (E1) with the pliers. Make sure that the belt tension is correct. Refer to the "Belt Tension Adjustment" section in this manual.

Note: This step may require two people.

11. To tighten the Flywheel hardware, use the 15 mm open end wrench to hold the nut (F) on one side steady and tighten the nut on the opposite side with the 15 mm socket and wrench.

Note: Before fully attaching the Shrouds, power up the machine to verify that the Magnet Arm (D) can move freely, and that the Brake Magnet and Flywheel (C) do not touch at the maximum resistance level.

12. Final Inspection

Inspect your machine to ensure that all hardware is tight and components are properly assembled.

Do not use until the machine has been fully assembled and inspected for correct performance in accordance with the Owner's Manual.

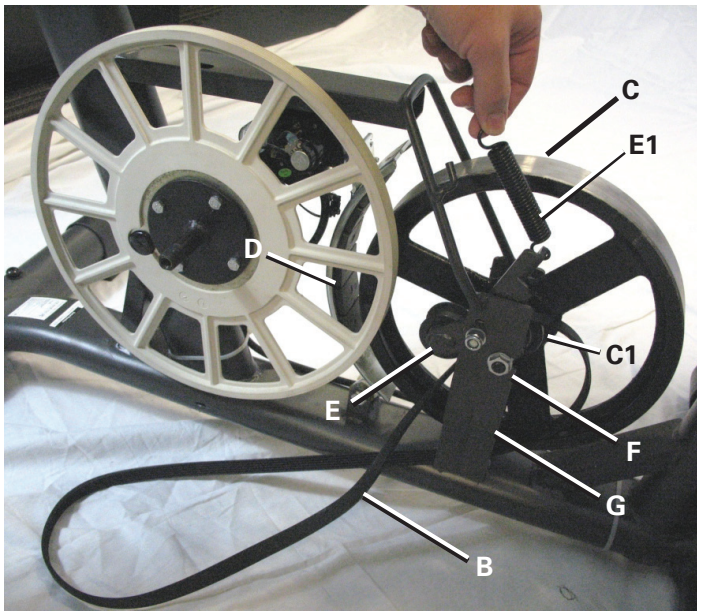

Replace the Belt Tensioner Assembly (Idler Assembly) on the Schwinn™ 130/170/230/270 and Journey 1.0/1.5/2.0/2.5 Bikes

Replacement Procedure
Skill Level: II
8006501.030123.F

NOTICE: This document provides instructions for the replacement of the Belt Tensioner Assembly (Idler Assembly) on the Schwinn™ 130/170 Upright Bikes, 230/270 Recumbent Bikes, Journey 1.0/1.5 Upright Bikes and Journey 2.0/2.5 Recumbent Bikes Bikes.

If you need assistance, please contact Customer Service (if purchased in US/Canada) or your local distributor (if purchased outside US/Canada). To find your local distributor, go to: www.nautilusinternational.com

This icon means a potentially hazardous situation which, if not avoided, could result in death or serious injury. Read and understand all Warnings on this machine.

Nautilus, Inc., (800) NAUTILUS / (800) 628-8458, www.NautilusInc.com - Customer Service: North America (800) 605-3369, csnls@nautilus.com | outside U.S. www.nautilusinternational.com | © 2013 Nautilus, Inc. | Schwinn is a trademark licensed to Nautilus, Inc., which is registered or otherwise protected by common law in the United States and other countries. | **ORIGINAL DOCUMENT - ENGLISH VERSION ONLY**

Important Safety Instructions - Before servicing or using this equipment, obey the following warnings:

This icon means a potentially hazardous situation which, if not avoided, could result in death or serious injury. Read and understand all Warnings on this machine.

Disconnect all power to the machine before you service it.

- Keep bystanders and children away from the product being serviced at all times.
- Make sure that the repair is done in an appropriate work space away from foot traffic and exposure to bystanders.
- Some components of the equipment can be heavy or awkward. Enlist the service of a second person when you do maintenance steps involving these components. Do not try to do heavy or awkward steps on your own.
- If replacement parts are necessary, use only genuine replacement parts and hardware supplied by Nautilus. Failure to use genuine replacement parts can cause a risk to users, keep the machine from operating correctly and void the warranty.
- Be sure that all warning stickers and instructional placards applied to the product stay present and in good condition when doing maintenance or replacing components. If at any time the Warning labels become loose, unreadable or dislodged, replace the labels. If purchased in US/Canada, contact Customer Service for replacement labels. If purchased outside US/Canada, contact your local distributor for them.
- Do not try to change the design or functionality of the machine being serviced as this can adversely affect user safety.
- Do not put the machine back in service until all shrouds, instructions, warning labels and correct functionality have been verified and tested for correct performance.

SAVE THESE INSTRUCTIONS.

Tools Required (not included)

#2 Phillips screwdriver

Small flathead screwdriver

Pedal wrench or 15mm open end wrench (130/230)
or crank puller (170/270)

6mm hex key

Needlenose pliers

13mm open end wrench

Safety goggles or other eye protection

Tape or marking pen

NOTICE: It is necessary to remove the Shrouds for this procedure. Refer to the "Replace the Shrouds" procedure.
It is necessary to adjust the Drive Belt tension at the end of this procedure. Refer to the "Belt Tension Adjustment" procedure

Disconnect all power to the machine before you service it.

Note: Your machine may not match the image. For reference only.

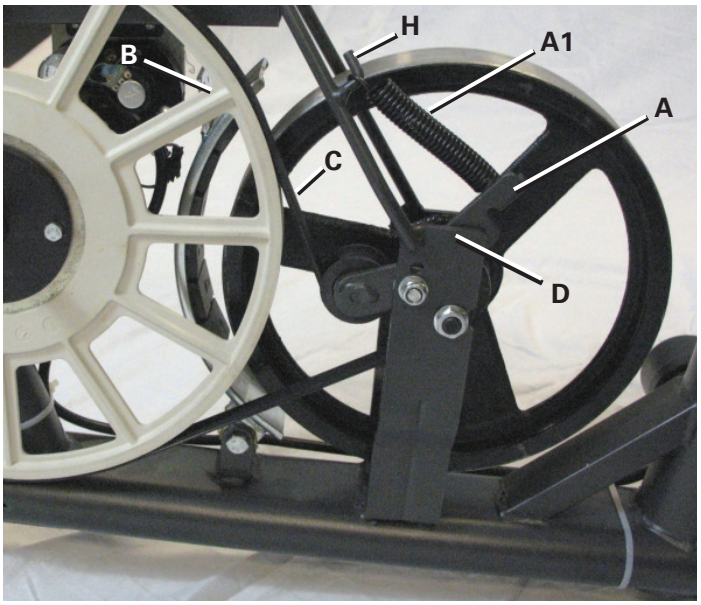

1. Carefully remove the Shrouds. Refer to the "Replace the Shrouds" procedure in this manual.

2. Mark the position of the Belt Tensioner (A) on the Main Frame bracket (D) to record the angle of the Tension Spring arm's position.

3. Slowly turn the Drive Pulley (B) backward and carefully ease the Drive Belt (C) off the Drive Pulley to the outside.

Be sure to keep fingers clear of all pinch hazards as you turn the Drive Pulley.

4. Using needlenose pliers, release the Tension Spring (A1) from the hook (H) on the Main Frame.

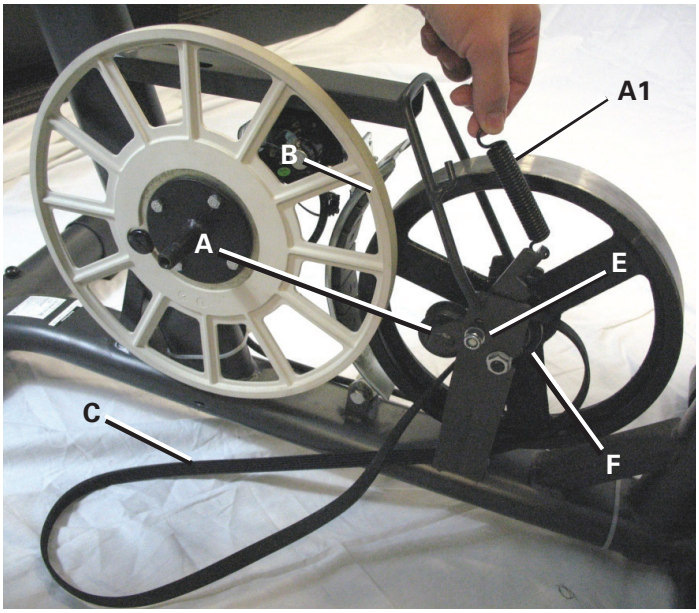

5. Using 13 mm wrench and 6mm hex key, loosen and remove the Belt Tensioner Hardware (E). Remove the Belt Tensioner assembly (A) from the Main Frame and the Drive Belt (C). Discard the old Belt Tensioner assembly.

6. Install the new Belt Tensioner assembly. Adjust the Belt Tensioner position to the angle of the previous position recorded in Step 2.

NOTICE: Do not overtighten the hardware (E). The Belt Tensioner must be able to pivot. If the hardware is too tight, this can cause wear on the bearings.

7. Put the Drive Belt (C) onto the Drive Pulley (B). Make sure the Drive Belt is aligned on the Flywheel pulley (F), Belt Tensioner (A) and Drive Pulley. Be sure that the upper portion of the Drive Belt is under the bearings on the Belt Tensioner.

8. Using needlenose pliers, attach the Belt Tensioner spring (A1). Make sure that the belt tension is correct. Refer to the "Belt Tension Adjustment" section in this manual.

Note: This step may require two people.

9. Final Inspection

Inspect your machine to ensure that all hardware is tight and components are properly assembled.

Do not use until the machine has been fully assembled and inspected for correct performance in accordance with the Owner's Manual.

SCHWINN™

Replace the Drive Pulley on the Schwinn™ 170/270 (Model Year 2017) Bikes

Replacement Procedure
Skill Level: III
Estimated Procedure Time: 30 minutes
8030864.030123.A

NOTICE: This document provides instructions for the replacement of the Drive Pulley (Crank Assembly) on the Schwinn™ 170 Upright Bike and 270 Recumbent Bike.

If you need assistance, please contact Customer Service (if purchased in US/Canada) or your local distributor (if purchased outside US/Canada). To find your local distributor, go to: www.nautilusinternational.com

This icon means a potentially hazardous situation which, if not avoided, could result in death or serious injury. Read and understand all Warnings on this machine.

Nautilus, Inc., www.NautilusInc.com, 5415 Centerpoint Parkway, Groveport, OH 43125 U.S.A. - Customer Service: North America (800) 605-3369, csnls@nautilus.com | outside U.S. www.nautilusinternational.com | Printed in China | © 2023 Nautilus, Inc. | Schwinn and the Schwinn logo are trademarks owned or licensed by Nautilus, Inc., registered or otherwise protected by common law in the United States and other nations. | **ORIGINAL DOCUMENT - ENGLISH VERSION ONLY**

Important Safety Instructions - Before servicing or using this equipment, obey the following warnings:

This icon means a potentially hazardous situation which, if not avoided, could result in death or serious injury. Read and understand all Warnings on this machine.

Disconnect all power to the machine before you service it.

- Read and understand the Part Replacement Procedure before working on the machine. Failure to obey the instructions and safety warnings could cause injury to the service technician or bystanders.
- Keep bystanders and children away from the product being serviced at all times.
- Make sure that the repair is done in an appropriate work space away from foot traffic and exposure to bystanders.
- Some components of the equipment can be heavy or awkward. Enlist the service of a second person when you do maintenance steps involving these components. Do not try to do heavy or awkward steps on your own.
- If replacement parts are necessary, use only genuine Nautilus replacement parts and hardware. Failure to use genuine replacement parts can cause a risk to users, keep the machine from operating correctly and void the warranty.
- Be sure that all warning stickers and instructional placards applied to the product stay present and in good condition when doing maintenance or replacing components. If at any time the Warning labels become loose, unreadable or dislodged, replace the labels. If purchased in US/Canada, contact Customer Service for replacement labels. If purchased outside US/Canada, contact your local distributor for them.
- Do not try to change the design or functionality of the machine being serviced as this can adversely affect user safety.
- Do not use the machine until all shrouds, instructions, warning labels and correct functionality have been verified and tested for correct performance.

SAVE THESE INSTRUCTIONS.

Tools Required (not included)

#2 Phillips screwdriver

13mm open end wrench

Small flathead screwdriver

Dead blow hammer
or rubber mallet
and punch

Crank puller

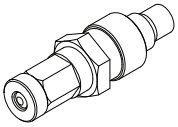

Safety goggles

Snap ring removal tool

NOTICE: It is necessary to remove the Shrouds for this procedure. Refer to the “Replace the Shrouds” procedure.
It is necessary to adjust the Drive Belt tension at the end of this procedure. Refer to the “Belt Tension Adjustment” procedure

To reduce the risk of electrical shock or unsupervised usage of the equipment, always unplug the power cord from the wall outlet and wait 5 minutes before cleaning, maintaining or repairing this machine. Place the power cord in a secure location.

Note: Your machine may not match the image. For reference only.

Right side view

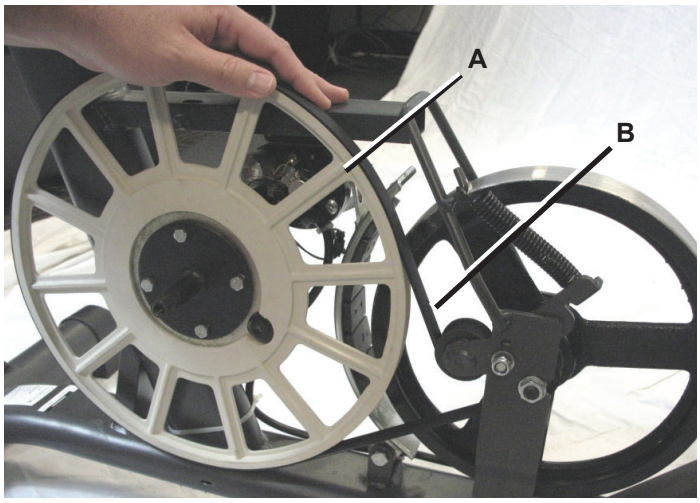

1. Carefully remove the Shrouds. Refer to the “Replace the Shrouds” procedure in this manual.

2. Slowly turn the Drive Pulley (A) backward and carefully ease the Drive Belt (B) off the Drive Pulley to the outside.

Be sure to keep fingers clear of all pinch hazards as you turn the Drive Pulley.

Left side view – Pulley Shaft Assembly

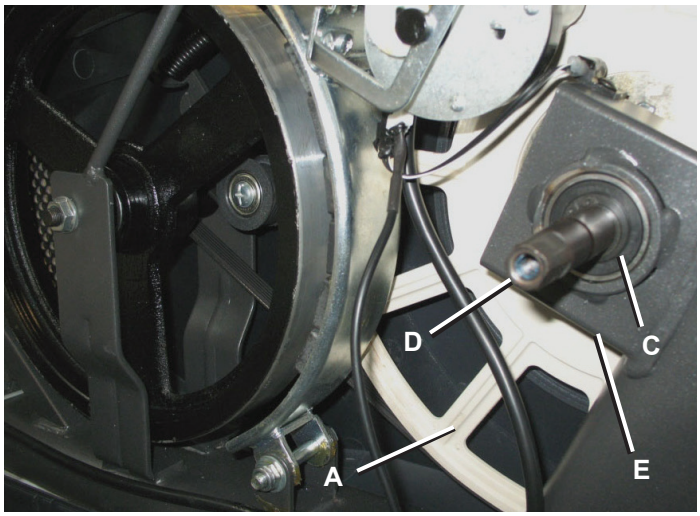

3. Using eye protection and snap ring removal tool, remove the Snap Ring (Item C) from the Pulley Shaft Assembly (Item D).

4. Using eye protection and a dead blow hammer (and punch, if needed), gently strike the Pulley Shaft (D) until it works out of the Frame (E) and releases the Drive Pulley (A) .

Note: The Crank Bearings will be left in the Frame after the axle is removed.

5. Installation is the reverse procedure. Align the axle of the new Pulley Shaft Assembly (D) with the mount hole on the Right side of the Frame (E). Using eye protection and a dead blow hammer, gently tap the end of the Pulley Shaft to push it into position.

NOTICE: Make sure the Snap Ring (C) is correctly seated on the Pulley Shaft Assembly.

6. Put the Drive Belt (B) onto the Drive Pulley (A). Slowly turn the Drive Pulley backward and carefully ease the Drive Belt onto the Drive Pulley. Make sure the Drive Belt is aligned on the Flywheel pulley (G), Belt Tensioner (H) and Drive Pulley. Be sure that the upper portion of the Drive Belt is under the bearings on the Belt Tensioner (H).

Be sure to keep fingers clear of all pinch hazards as you turn the Drive Pulley.

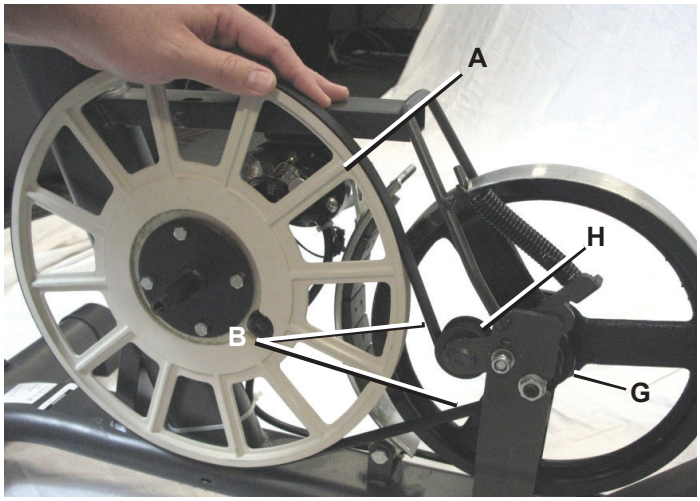

7. Before fully attaching the Shrouds, verify that the RPM Sensor (I) and Speed Sensor Magnets (J) on the Drive Pulley do not touch.

Upright bike

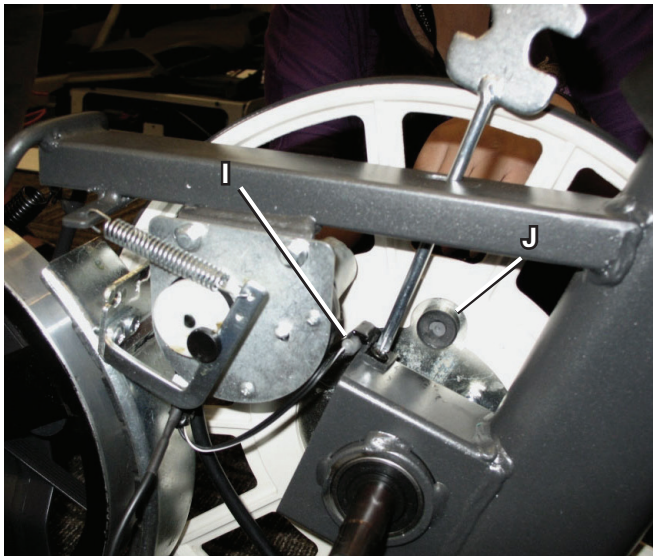

8. Make sure that the belt tension is correct. Refer to the “Belt Tension Adjustment” section in this manual.

Note: This step may require two people.

9. Final Inspection

Inspect your machine to ensure that all hardware is tight and components are properly assembled.

Do not use until the machine has been fully assembled and inspected for correct performance in accordance with the Owner’s Manual.

Recumbent bike

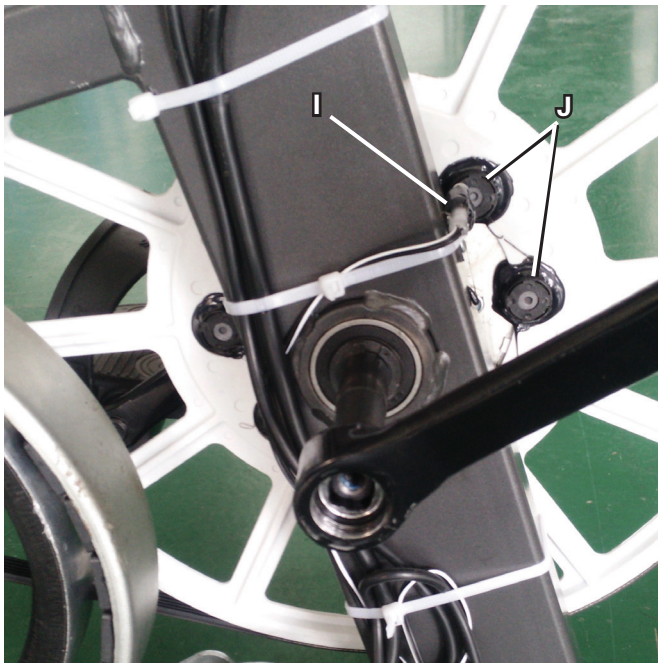

Replace the RPM Sensor (Speed Sensor) on the Schwinn™ 130/170/230/270 and Journey 1.0/1.5/2.0/2.5 Bikes

Replacement Procedure
Skill Level: II
8006504.030123.F

NOTICE: This document provides instructions for the replacement of the RPM Sensor (Speed Sensor) on the Schwinn™ 130/170 Upright Bikes, 230/270 Recumbent Bikes, Journey 1.0/1.5 Upright Bikes and Journey 2.0/2.5 Recumbent Bikes.

If you need assistance, please contact Customer Service (if purchased in US/Canada) or your local distributor (if purchased outside US/Canada). To find your local distributor, go to: www.nautilusinternational.com

This icon means a potentially hazardous situation which, if not avoided, could result in death or serious injury. Read and understand all Warnings on this machine.

Nautilus, Inc., (800) NAUTILUS / (800) 628-8458, www.NautilusInc.com - Customer Service: North America (800) 605-3369, csnls@nautilus.com | outside U.S. www.nautilusinternational.com | © 2013 Nautilus, Inc. | Schwinn is a trademark licensed to Nautilus, Inc., which is registered or otherwise protected by common law in the United States and other countries. | **ORIGINAL DOCUMENT - ENGLISH VERSION ONLY**

Important Safety Instructions - Before servicing or using this equipment, obey the following warnings:

This icon means a potentially hazardous situation which, if not avoided, could result in death or serious injury. Read and understand all Warnings on this machine.

Disconnect all power to the machine before you service it.

- Keep bystanders and children away from the product being serviced at all times.
- Make sure that the repair is done in an appropriate work space away from foot traffic and exposure to bystanders.
- Some components of the equipment can be heavy or awkward. Enlist the service of a second person when you do maintenance steps involving these components. Do not try to do heavy or awkward steps on your own.
- If replacement parts are necessary, use only genuine replacement parts and hardware supplied by Nautilus. Failure to use genuine replacement parts can cause a risk to users, keep the machine from operating correctly and void the warranty.
- Be sure that all warning stickers and instructional placards applied to the product stay present and in good condition when doing maintenance or replacing components. If at any time the Warning labels become loose, unreadable or dislodged, replace the labels. If purchased in US/Canada, contact Customer Service for replacement labels. If purchased outside US/Canada, contact your local distributor for them.
- Do not try to change the design or functionality of the machine being serviced as this can adversely affect user safety.
- Do not put the machine back in service until all shrouds, instructions, warning labels and correct functionality have been verified and tested for correct performance.

SAVE THESE INSTRUCTIONS.

Tools Required (not included)

#2 Phillips screwdriver

Small flathead screwdriver

Pedal wrench or 15mm open end wrench (130/230)
or crank puller (170/270)

Utility knife or scissors to cut ziptie

Ziptie

NOTICE: It is necessary to remove the Shrouds for this procedure. Refer to the “Replace the Shrouds” procedure.

Disconnect all power to the machine before you service it.

Note: Your machine may not match the image. For reference only.

1. Carefully remove the Shrouds. Refer to the “Replace the Shrouds” procedure in this manual.

2. Observe the cable routing from the RPM Sensor (A) to the wiring harness (C) on your machine. Carefully disconnect the RPM Sensor cable (B) from the wiring harness.

3. Remove the hardware that attaches the RPM Sensor (A) to the Main Frame. Carefully remove the old RPM Sensor and cable and discard it.

NOTICE: Do not cut or pinch any cables.

4. Installation is the reverse procedure.

NOTICE: Do not cut or pinch any cables. Be sure the routing for the new RPM Sensor cable (B) and other wiring is correct to prevent interference from moving parts.

Note: Before fully attaching the Shrouds, verify that the RPM Sensor (A) and Speed Sensor Magnet (D) on the Drive Pulley do not touch.

5. Final Inspection

Inspect your machine to ensure that all hardware is tight and components are properly assembled.

Do not use until the machine has been fully assembled and inspected for correct performance in accordance with the Owner’s Manual.

Upright bike

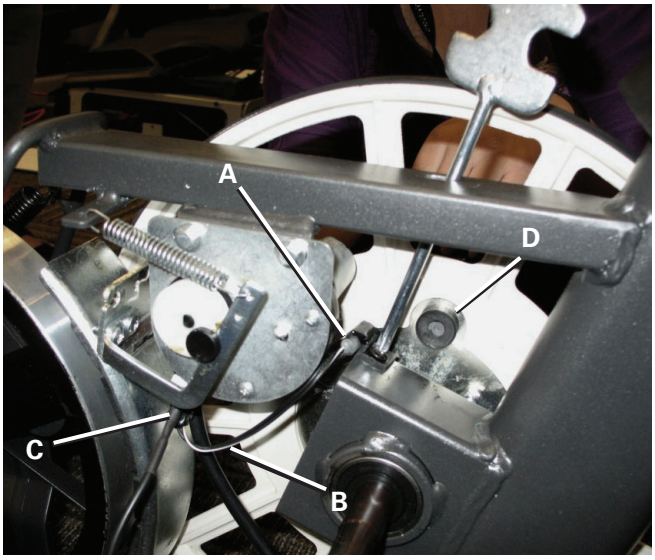

Recumbent bike

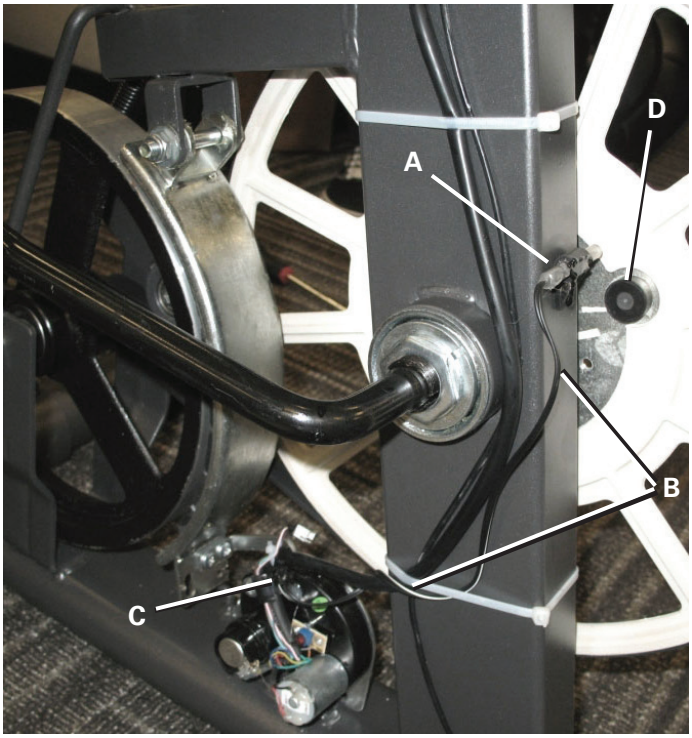

Replace the Power Inlet on the Schwinn™ 130/170/230/270 and Journey 1.0/1.5/2.0/2.5 Bikes

Replacement Procedure
Skill Level: II
8006505.030123.F

NOTICE: This document provides instructions for the replacement of the Power Inlet on the Schwinn™ 130/170 Upright Bikes, 230/270 Recumbent Bikes, Journey 1.0/1.5 Upright Bikes and Journey 2.0/2.5 Recumbent Bikes.

If you need assistance, please contact Customer Service (if purchased in US/Canada) or your local distributor (if purchased outside US/Canada). To find your local distributor, go to: www.nautilusinternational.com

This icon means a potentially hazardous situation which, if not avoided, could result in death or serious injury. Read and understand all Warnings on this machine.

Nautilus, Inc., (800) NAUTILUS / (800) 628-8458, www.NautilusInc.com - Customer Service: North America (800) 605-3369, csnls@nautilus.com | outside U.S. www.nautilusinternational.com | © 2013 Nautilus, Inc. | Schwinn is a trademark licensed to Nautilus, Inc., which is registered or otherwise protected by common law in the United States and other countries. | **ORIGINAL DOCUMENT - ENGLISH VERSION ONLY**

Important Safety Instructions - Before servicing or using this equipment, obey the following warnings:

This icon means a potentially hazardous situation which, if not avoided, could result in death or serious injury. Read and understand all Warnings on this machine.

Disconnect all power to the machine before you service it.

- Keep bystanders and children away from the product being serviced at all times.
- Make sure that the repair is done in an appropriate work space away from foot traffic and exposure to bystanders.
- Some components of the equipment can be heavy or awkward. Enlist the service of a second person when you do maintenance steps involving these components. Do not try to do heavy or awkward steps on your own.
- If replacement parts are necessary, use only genuine replacement parts and hardware supplied by Nautilus. Failure to use genuine replacement parts can cause a risk to users, keep the machine from operating correctly and void the warranty.
- Be sure that all warning stickers and instructional placards applied to the product stay present and in good condition when doing maintenance or replacing components. If at any time the Warning labels become loose, unreadable or dislodged, replace the labels. If purchased in US/Canada, contact Customer Service for replacement labels. If purchased outside US/Canada, contact your local distributor for them.
- Do not try to change the design or functionality of the machine being serviced as this can adversely affect user safety.
- Do not put the machine back in service until all shrouds, instructions, warning labels and correct functionality have been verified and tested for correct performance.

SAVE THESE INSTRUCTIONS.

Tools Required (not included)

#2 Phillips screwdriver

17mm open end wrench
or adjustable wrench

Small flathead screwdriver

Pedal wrench or 15mm open end wrench (130/230)
or crank puller (170/270)

NOTICE: It is necessary to remove the Shrouds for this procedure. Refer to the “Replace the Shrouds” procedure.

Disconnect all power to the machine before you service it.

Note: Your machine may not match the image. For reference only.

1. Carefully remove the Left Shroud. Refer to the “Replace the Shrouds” procedure in this manual.

2. Carefully disconnect the the Power Inlet cable (A) in the Shroud from the wiring harness (B) on the motor.

Upright bike

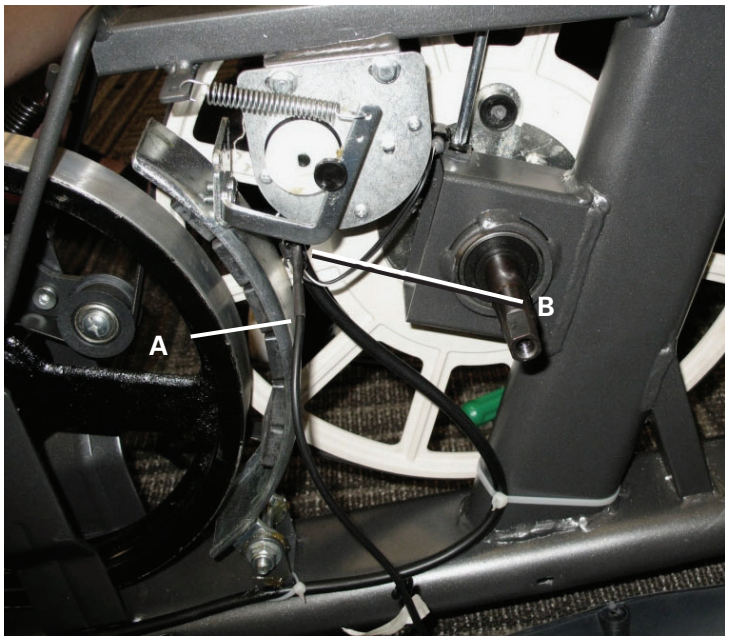

Recumbent bike

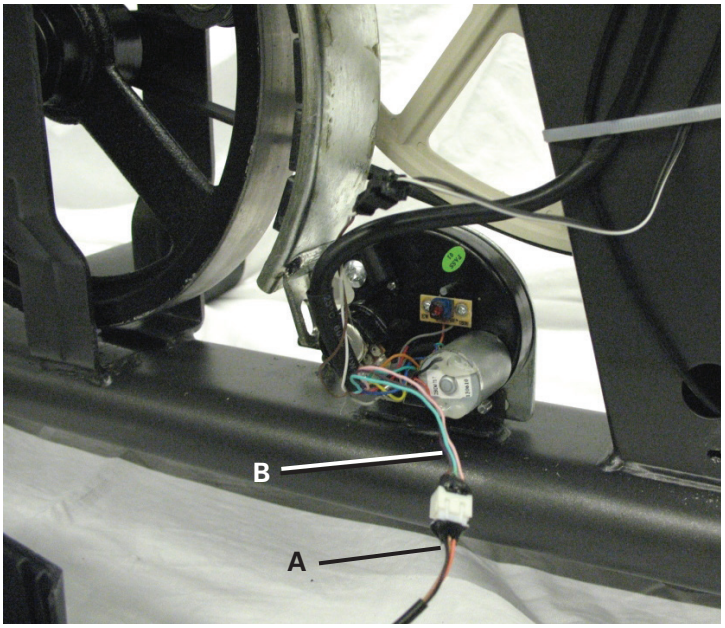

3. Loosen and remove the thin Nut from the Power Inlet (C) on the outside of the Shroud.

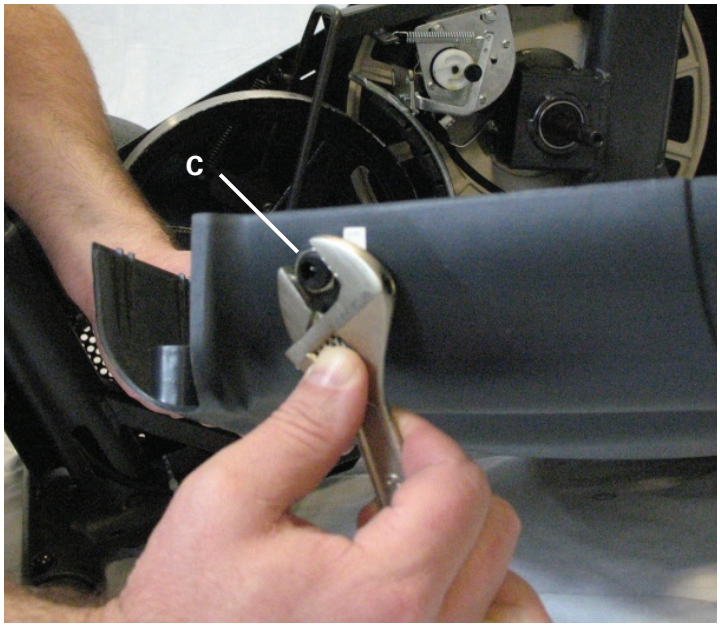

4. Pull the Power Inlet plug (C) out of the hole toward the inside of the Shroud. Discard the old Power Inlet assembly.

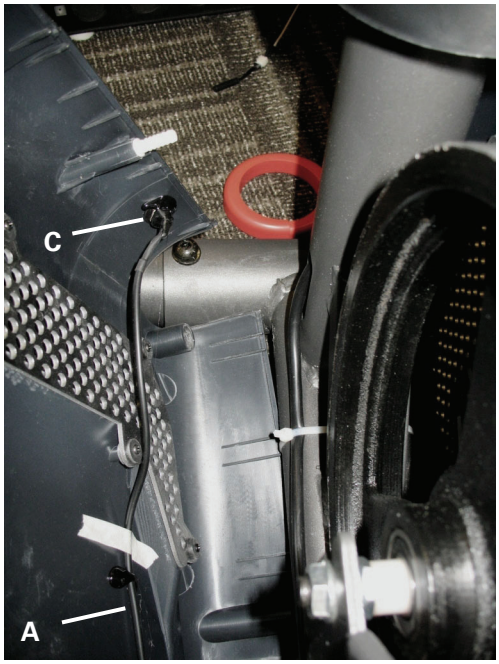

5. Installation is the reverse procedure.

NOTICE: Do not cut or pinch any cables. Be sure the Power Inlet plug is seated evenly in the hole.

6. Final Inspection

Inspect your machine to ensure that all hardware is tight and components are properly assembled.
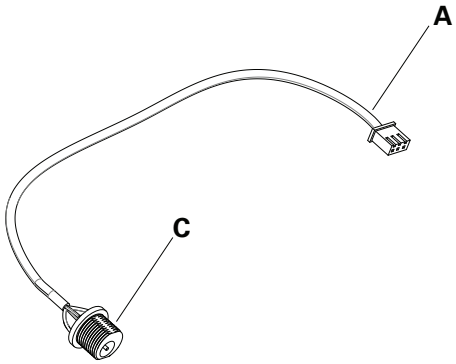
Do not use until the machine has been fully assembled and inspected for correct performance in accordance with the Owner's Manual.