# Models 97Ti, 95Ti, 93T, 97Te, 95Te LCD Treadmills

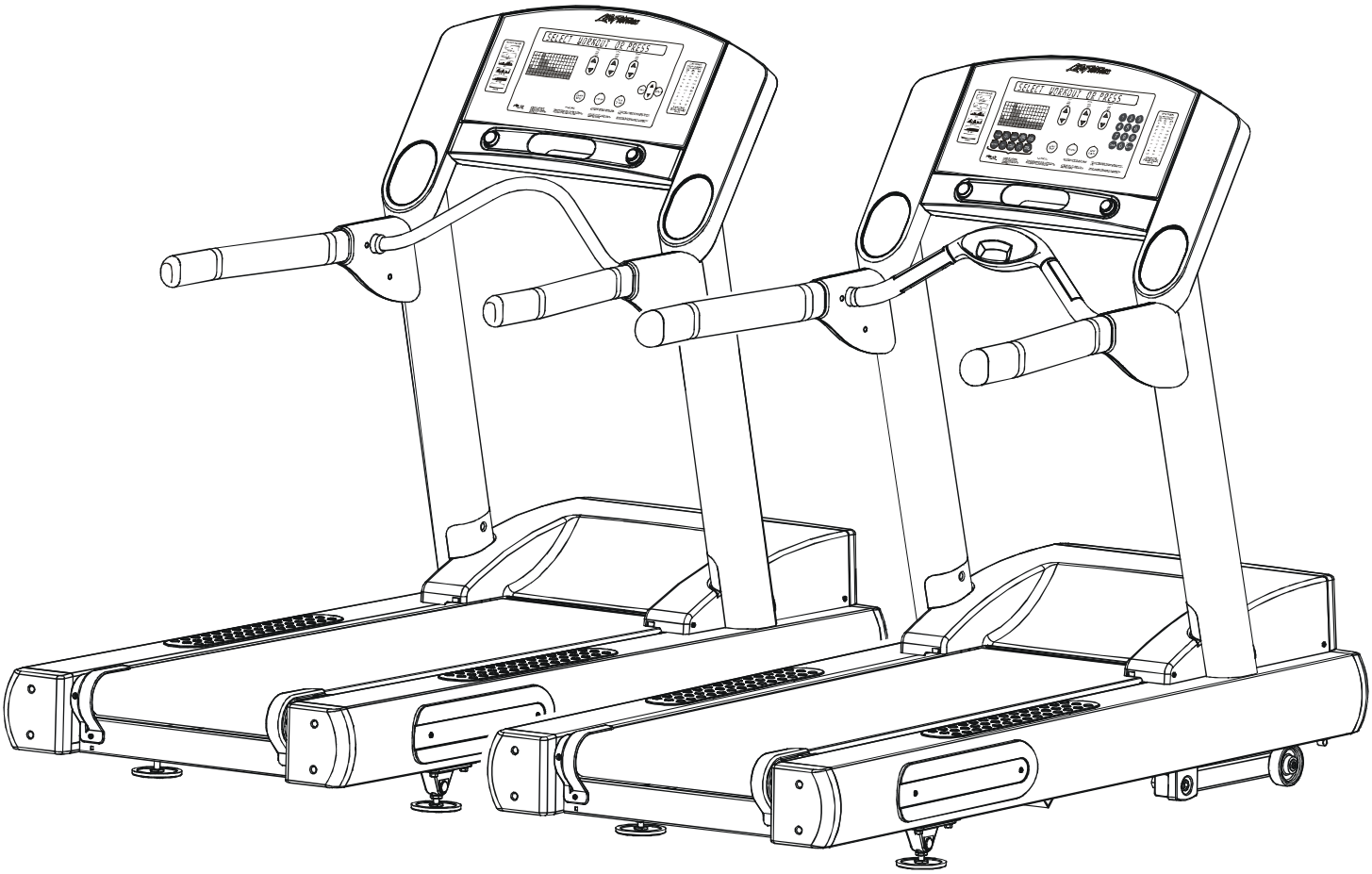

## Customer Support Services

# *SERVICE MANUAL*

# GENERAL CONTENTS

**INTRODUCTION** ..... ii
**THEORY OF OPERATION** ..... iii
**SPECIAL SERVICE TOOLS** ..... iv
**GLOSSARY** ..... v

## SECTIONAL CONTENTS

| | |
|---|---|
| *TROUBLESHOOTING* | *1* |
| *DIAGNOSTICS LED* | *2A* |
| *DIAGNOSTICS LCD* | *2B* |
| *HOW TO...SERVICE* | *3* |
| *ELECTRONICS* | *4* |
| *MISCELLANEOUS* | *5* |

## *Life Fitness Treadmills 97Ti, 97Te, 95Ti, 95Te and 93T*

## *INTRODUCTION*

The Service Manual provides safe and efficient step-by-step test and service procedures for 97Ti, 95Ti, 93T, 97Te, and 95Te Treadmills. The “Ti” designation represents Light Emitting Diode (LED) Consoles. The “Te” designation represents Liquid Crystal Display (LCD) Consoles. Illustrations in this service manual reflect service view(s) to compliment the step-by-step procedure. Unnecessary views or details may not be illustrated for the sake of clarity.

When a service problem occurs, it is recommended that you first refer to “Troubleshooting” in Section1 or “Diagnostics” in Section 2. Refer to “How To…” in Section 3 for actual service procedures, and in addition, Special Service Tools will be listed otherwise, standard tools should be used. Refer to “Electronics” in Section 4 for Block Diagrams and Connector locations. Refer to “Miscellaneous” in Section 5 for ID Tag Location, Maintenance, and other general information pertinent to the product.

Life Fitness Customer Support Services (CSS) can be contacted Monday - Friday 8:00 AM - 5:00 PM Central Standard Time. To response to your needs expeditiously, please provide Life Fitness Customer Support Services with the following information:

- Model number
- Serial number
- Part name and number
- Problem or symptom

***LIFE FITNESS – CUSTOMER SUPPORT SERVICES***
*10601 Belmont Avenue; Franklin Park, IL 60131; U.S.A.*
*Telephone: 847.451.0036 Toll-free: 800.351.3737*
*FAX: 847.288.3702 Toll-free: 800.216.8893*

## THEORY OF OPERATION

The Treadmill is an electromechanical device that operates on A/C Voltage System and is controlled through the electronics in the Display Console. The key components that make up the Treadmill are the Unit Frame, Electric Motor and Motor Controller, Belt and Deck, Wax and Wax Motor, Pulleys and Rollers, and the Display Console.

Initially, voltage is received by the Line Filter which distributes this power to the Wax Lift PCB, Motor Controller and other various electrical and electronic components that activates all the mechanical devices. The operator ultimately controls all electromechanical devices through the Console Display, and with a touch of a finger, makes settings and adjustments to Speed, Incline, and Custom Workout Programs.

The Unit Frame is critical not only to support the operator but also to support the electromechanical devices and the unit's overall appearance. Although the frame is a non-maintenance item, its design and structure are essential to providing years of safe and reliable service.

The most critical parts on the Treadmill are the Striding Belt and Deck. Regardless of all other components, the success of a good Treadmill is its Striding Belt and Deck. The Deck is made up of a special particleboard, which allows for flexibility and long wear. Under the Deck are the Lifesprings™, which are designed to support and absorb the shock load. To prevent the Deck from being worn out by constant operation of the Striding Belt, the Wax Nozzle sprays wax to the underside of the Striding Belt. This is accomplished by a Wax Motor/Pump, which pumps the wax out of the Wax Bag through the Wax Nozzle. Remember, when replacing the Striding Belt, always flip or replace the Deck, and replace the Anti-Static Tinsel at the same time.

The Striding Belt is designed to endure constant stress loads. It is mounted directly over the Front and Rear Rollers. The Main Drive Motor has a Pulley on the end of its shaft, which is connected by a Drive Belt to the Front Roller Pulley. The Rear Roller is freewheeling. The Striding Belt tension is adjustable by means of Adjusting Bolts, which are located at the ends of the Rear Roller. When turned, they are used to adjust belt tension and belt centering. In order to increase belt and deck life, it is important to properly keep all areas of the machine clean.

The Display Console is the brain center of the Treadmill. It is here where all electromechanical operations are controlled for specific program operations. Depending on the Display Console, various selections and settings can be easily accomplished either through a Numeric Keypad or Up/Down Arrows. The Display Console allows the operator to selectively choose the program and input pertinent statistical information such as Weight, Age, Language, etc.

The Treadmill is by far one of the most popular pieces of all cardiovascular exercise equipment. With proper routine preventative maintenance and care, it will provide a lifetime of healthy cardiovascular exercise.

## SPECIAL SERVICE TOOLS

Unless otherwise specified, only basic hand tools are required to perform service procedures outlined in this section. Some of these standard tools should consist of: Philips and Straight-Blade Screw Drivers, TORX Set, Pliers, Rubber Mallet, Pry Bar, Snap Ring Pliers (internal and external), Standard and Metric size Socket Set (3/8 or 1/2 drive), and Standard and Metric size Combination, open-end, or Box Wrenches.

Specialized tools will be listed after the sub-heading **Special Service Tools:**, which appears below the Service Procedure Heading at the top of the page. If no specialized tools are required, then the title would read: **Special Service Tools: NONE**, which means that standard hand tools should be employed to provide service to the product.

Specialized tools must be used to safely complete service procedures effectively. Improvisation or attempts to use any other tool could result in unnecessary damage to the equipment or personal injury.

## GLOSSARY

Familiarize yourself with those words and acronyms commonly referred to in this manual.

| | |
|---|---|
| **Access Panels** | Access panels are located one on each side of the unit. The left access panel allows entry to the wax pump and the right access-panel for the wax nozzle or anti-static tinsel. |
| **Anti-Scuff Pads** | Rubber strips located on the surface of each side of the frame, and used to ensure sure footing. |
| **Anti-Static Tinsel** | Copper tinsel wire that discharges static electricity from the striding belt during operation. |
| **Connectors** | Plastic devices used to connect wiring together. |
| **Deck** | Special particleboard that is used for the running surface. |
| **Display Console Board** | Electronic board used for making direct input settings and monitoring output messages, which are displayed in the digital readout display. |
| **EEPROM** | Electrically erasable programmable read only memory. |
| **EEROM** | Electrically erasable read only memory. |
| **Frame Tag Board** | Stores maintenance and error data with date and time stamp. |
| **Front Roller** | Motor belt driven, the front roller drives the striding belt. |
| **HR Sensor** | Located in each handle grip and measures heart rate. |
| **Idler Pulley Assembly** | A spring-loaded bracket assembly pulley, which is used to maintain constant load against the main drive belt. |
| **Jumper** | Electrical connector used to connect between two electrical points. |
| **LED** | Light Emitting Diodes. |
| **LCD** | Liquid Crystal Display |
| **Levelers** | Adjustable supports under the rear of the treadmill, which are used to stabilize the unit. |
| **Lift Motor** | The motor that raises and lowers the unit for incline and decline operations. |
| **LifePulse** | Measures heart rate. |
| **LifeSprings** | Springs under the deck to absorb impact of the walker or runner. |

## GLOSSARY

| | |
|---|---|
| **Main Drive Belt** | Connects between the main drive motor pulley and the front roller pulley, and used to transmit the driving power of the main drive motor to the front roller. |
| **Main Wire Harness** | Connected to the operating components of the unit to provide electrical power. |
| **Motor Controller** | Regulates the speed of the striding belt. |
| **Overlay Bezel** | A clear plastic covering over the display console. |
| **PCB** | Programmable Circuit Board |
| **Power Module** | Receives main electrical source from the wall outlet to distribute voltage throughout the various electromechanical systems. |
| **Polar Receiver** | Monitors heart rate. |
| **Smart Stop Sensor** | Senses the presence of an operator. |
| **Rear Roller** | A free spinning roller with adjusting screws at each end of the roller used for tensioning and centering the striding belt. |
| **Rear Roller Guards** | Located at the back of each side of the rear roller, are used as protective guards. |
| **RPM** | Revolutions per minute. |
| **Static Current** | Steady current flow. |
| **Stop Switch** | A switch used to interrupt power going to the motor to stop the unit. |
| **Striding Belt** | Sometimes referred to as the 'walking belt' and used to walk or run on. |
| **Telemetry Receiver** | A sensor that reads Heart Rate signal from the operator's chest strap transmitter. |
| **Ties** | Plastic straps used to secure loose wiring to the main frame. |
| **Wax Bracket** | A mounting bracket that spans across the rear width of the unit and is located inside the striding belt area is used to secure the positions of the wax tube and wax nozzle. |
| **Wax/Lift Board** | A circuit board, which is located under the motor shroud, is used to communicate input/output signals to and from the console, wax and lift motors, frame tag, and motor. |
| **Wax Motor/ Pump** | This motor is mounted on the frame and is used to pump the wax out of the wax bag, through the wax tube, and out the wax nozzle onto the underside of the striding belt. |

# SECTION I

# TROUBLESHOOTING GUIDE

**Page**

No Power To Treadmill....3
No Power To Treadmill Console....5
No Power....6
Display Does Not Illuminate....6
Striding Belt Slips During Footfall....6
Maximum Speed Is Reduced....6
Knocking Sound At Rear Of Machine....6
Knocking Sound Coming From Deck....6
Rubbing Sound From Underneath Machine....7
Display Reads Immobilized....7
Squeaking Noise....7
Loud Groaning Sound From Front Of Machine....7
Loud Groaning Sound On Footfall....7
Display Overlay Keys Are Not Responding When Pressed....7
Unit Resets Randomly Or Pauses....7
Wax Leak....8
Striding Belt Is Traveling Beyond Tracking Limits....8
Striding Belt Not Centered....9
Striding Belt Misalignment....9
LifePulse Heart Rate Does Not Respond....9
Display Reads Heart Rate With Hands Removed....9
No Chest Strap Detected....9
Erratic Heart Rate Readings....10
Abnormally Elevated Heart Rate Readings....10
Motor Controller Comm Bad: Check Harness Between Lift And Controller –P9/P3....10
Motor Controller Comm Bad: Check Power To Motor Controller....10
Wax And Lift Board Comm Bad: Check Power On Lift....10
Both Lift And Controller Comm Bad: Check Harness Between Console And Lift –P1 And P1....11
System Configured Two Wired....11
Incline Inoperative....11
Home Switch Error....11
Negative Switch Error....11
Waxer Unplugged....11
Smart Stop Unplugged....12
Clock Comm Bad....12
Frame Tag Unplugged....12
Sci Error....12
Dynamic Current Trip....12
Checksum Error Xxxx....12
Notify Maintenance Motor Controller Error....12
Notify Maintenance Incline Timeout Error....13
Notify Maintenance Home Switch Error....13

## Contents Continued

**Page**

Notify Maintenance Negative Switch Error ..... 13
Notify Maintenance Frame Tag Unplugged ..... 13
Unable To Attain Target Speed ..... 13
Notify Maintenance Speed Sensor Error ..... 13
External Rom Failure ..... 13
Channels Do Not Change ..... 14
Sound Does Not Change ..... 14
No Sound ..... 14
Unable To Receive Channels ..... 14
Snow And Noise ..... 14
Screen Is Blank ..... 14
Screen Does Not Respond To Touch ..... 14
Wrong Buttons Activate ..... 14
Screen Does Not Turn On ..... 15
No Beeps ..... 15
Only One Beep ..... 15
Only One Beep At Power Up ..... 15
One Beep Followed By Three Beeps ..... 15
Only One Beep ..... 15
One Beep And A Burp ..... 15
One Beep And Three Beeps ..... 15
Channels Do Not Change ..... 16
Sound Does Not Change ..... 16
No Sound ..... 16
Unable To Receive Channels ..... 16
Snow And Noise ..... 16
Screen Is Blank ..... 16
Screen Is Dark ..... 16
Screen Does Not Respond To Touch ..... 16
The Wrong Buttons Activate ..... 16
Screen Does Not Turn On ..... 16
Console Does Not Light Up ..... 16
Testing The Inverter Board ..... 17
Testing The Power Supply Cable ..... 18

# TROUBLESHOOTING GUIDE

## NO POWER TO TREADMILL

In order to diagnose NO POWER to Treadmill, the Motor Cover must be removed, and the Treadmill must be plugged into an electrical outlet. Use the following **TROUBLESHOOTING CHART** to take the proper corrective action for NO POWER TO TREADMILL. In conjunction with this Chart, refer to the next page to reference Test Points (**TP1** through **TP5**) on the **Electrical Schematic**.

| STEPS | INSPECT | ACTION | RESULTS |
|---|---|---|---|
| 1 | Line Cord Voltage | Remove the Line Cord Bracket, unplug the Line Cord from Treadmill, and then test for Line Voltage. | If Line Voltage is present, then continue on to Step 2. |
| | | | If Line Voltage is not present, then test for Voltage at wall outlet. If no voltage is present, then check the Main Service Breaker at the Facility. If wall outlet voltage is present, then replace the Line Cord. |
| 2 | Power Switch | Turn the Unit Power Switch ON, and test for Line Voltage at TP1. | If Line Voltage is present, then continue on to Step 3. |
| | | | If Line Voltage is not present, then replace Power Switch. |
| 3 | Line Filter | Turn the Unit Power Switch ON, and test for Line Voltage at TP2. | If Line Voltage is present, then continue on to Step 4. |
| | | | If Line Voltage is not present, then replace the Line Filter. |
| 4 | Circuit Breaker | Turn the Unit Power Switch ON, and test for Line Voltage at TP3. | If Line Voltage is present, then continue on to Step 5. |
| | | | If the Line Voltage is not present, then reset the Circuit Breaker, or if necessary replace it. |
| 5 | Motor Controller | Turn the Unit Power Switch ON, and test for Line Voltage at the Motor Controller Cable at TP5. | If Line Voltage is present and NO LEDs are lit then check to see if the Motor Cable is unplugged or damaged, and replace as necessary. |
| | | | If Line Voltage is present and NO LEDs are lit, then check to see if the Motor is overheated or is damaged. With the Motor unplugged, OHM out the two blue wires using a Multi-Meter. If there is NO Continuity, then replace Motor. If NO Line Voltage is present, then check Cables between the Power Box and Motor Controller, and replace as necessary. |
| 6 | Auto Transformer and Wax/Lift Board | Turn the Unit Power Switch ON, and test for 120v AC at the Wax/Lift Board Cable at TP4. | Check for damaged cables and replace. If the cables are not damaged, replace the Auto Transformer. |
| | | NO LEDs are lit on the Wax/Lift Board. | Remove the Wax/Lift Board from the Treadmill. Check fuses 1, 2, and 3, with the Multi-Meter set on resistance. If the fuses are good, then test the power cable from the Power Box to the Wax/Lift Board for 120 Volts. |
| | | | If fuses are shorted out, then replace the Wax/Lift PCB. |
| | | Fuse No. 1 is blown. | Inspect the Wax/Lift Board for any signs of damage. If damaged, replace the Wax/Lift Board. |
| | | | Inspect cabling from the Wax/Lift Board to: Frame Tag, Motor Controller, Frame Switch, and Lift Motor Home Switch. If cabling is damaged, then replace as necessary. |
| | | Fuses No. 2 or 3 are blown. | Check for a shorted wire at the Lift Motor. The resistance is checked at the: Black to Red wire, which should read about 30 OHMS; the White to Red wire should read 15 OHMS, and the White to Black wire should also read 15 OHMS. If any of these wires register '0 OHMS', then replace the Lift Motor. |

## NO POWER TO TREADMILL - Continued

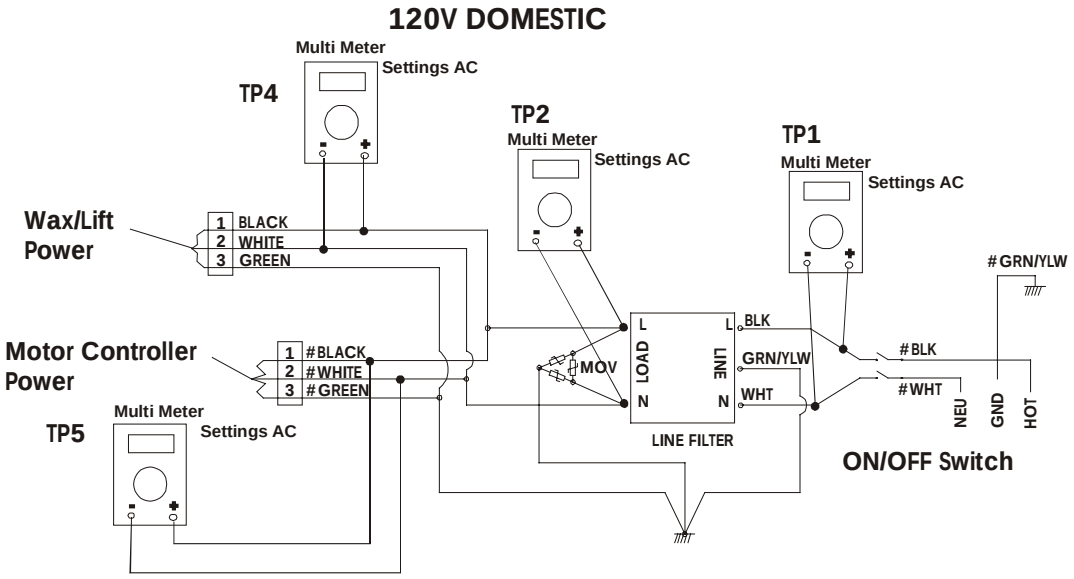


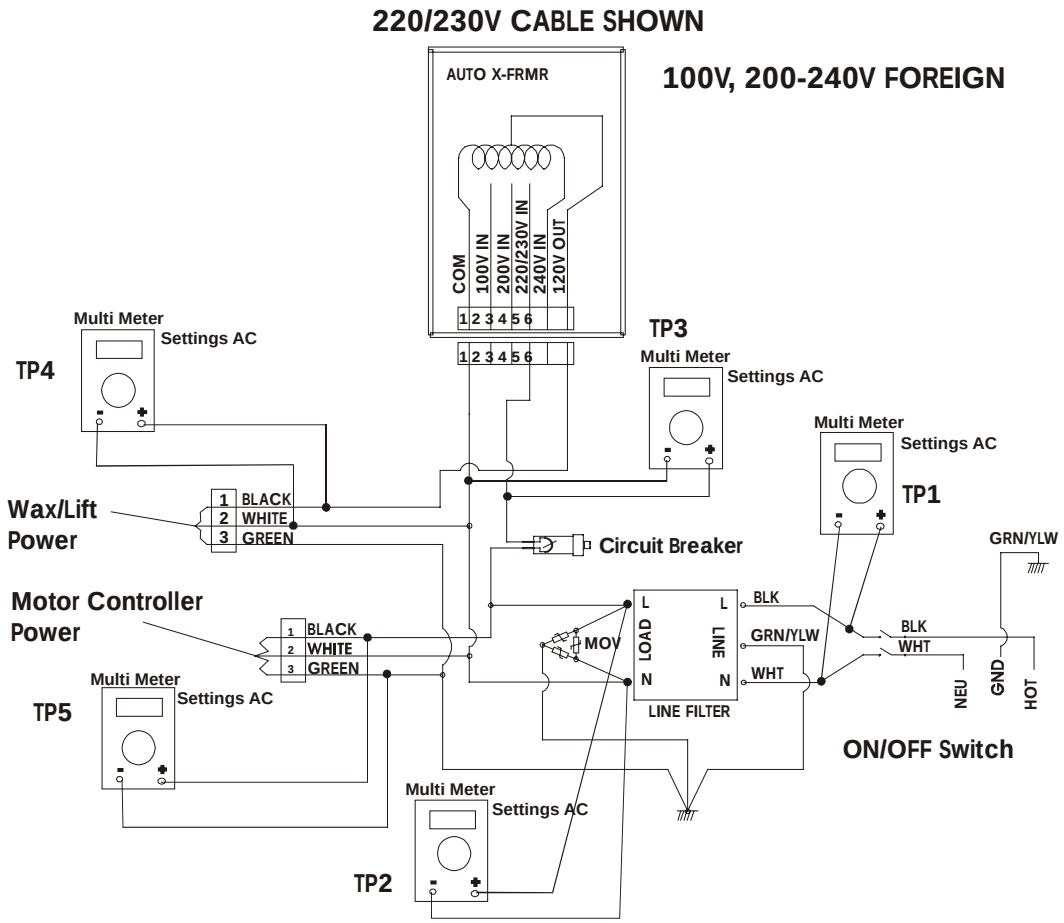

## NO POWER TO TREADMILL CONSOLE

Use the following procedure to troubleshoot No Power to the Treadmill Console.

1. Turn the Power OFF to the Unit.
2. Remove the Console Assembly to gain access to the Main Wiring Harness (P1). Leave all cables connected for testing.
3. Turn the Power back ON.
4. Place the **BLACK** Negative lead of the Multi-Meter on Pins No. 1 (yellow) and 2 (orange) to obtain a ground.
5. Place the **RED** Positive lead of the Multi-Meter on the corresponding wire to the verify voltage.
6. Following the Troubleshooting Chart below to verify problem.

| TROUBLESHOOTING – "NO POWER TO DISPLAY CONSOLE" | | | | |
|---|---|---|---|---|
| **VOLTS** | **FUSE NO.** | **WAX/LIFT BOARD WIRE** | **POSSIBLE CAUSE** | **SOLUTION** |
| 12vdc | 4 | White | Short circuit in the Emergency Stop Switch Circuit. | If Voltage is present and the Console is not ON, then replace the Console PCB.<br><br>If NO Voltage is present, then check the corresponding Wax Lift Board Fuse. |
| 8vdc | 6 | Red | Short circuit in the Console PCB. | If Voltage is present and the Console is not ON, then replace the Console PCB.<br><br>If NO Voltage is present, then check the corresponding Wax Lift Board Fuse. |
| 8vdc | 5 | Brown | Short circuit in the Console PCB. | If Voltage is present and the Console is not ON, then replace the Console PCB.<br><br>If NO Voltage is present, then check the corresponding Wax Lift Board Fuse. |
| | | | Short in the Smart Stop Circuit or Cable. | Inspect the Smart Stop Circuit Board and Cables for damage. If necessary, replace. |
| | | | C-SAFE Port, Fuse No. 5, shorts out when plugging in an accessory. | Unplug the accessory that is connected to the C-SAFE ports. If problem continues with the accessory unplugged, replace the Console. If problem only persists with accessory plugged in, then the accessory vendor must be contacted. |
| | | | Check for shorts in cables. | If necessary, replace. |

# TROUBLESHOOTING GUIDE

| SYMPTOM | PROBABLE CAUSE | CORRECTIVE ACTION |
|---|---|---|
| **No Power.** | Insufficient power source. | Plug treadmill into a proper electrical configuration. Refer to the Operations Manual. |
| | Circuit breaker, if equipped. | Verify that circuit breaker is not open. If open, reset circuit breaker, if equipped. |
| **Display does not illuminate when machine is powered on.** | Insufficient power source. | Plug treadmill into a proper electrical configuration. Refer To The Operations Manual. |
| | Loose 10-pin connection at display console or wax/lift control board. | Check all electrical connections for proper attachment. |
| | Damaged main harness wire connection. | Replace wire harness. See How To…Replace Main Wire Harness. |
| | Row of six LEDs not lit. | Check that the EEPROM in the Wax Lift Board is seated properly. If necessary replace the Wax Lift Board. |
| | Lift EEPROM not seated or missing. | If row of 6 LEDs not lit on top of Wax/Lift Board, then check that the EEPROM in the Wax/Lift Board is seated properly. Replace the Wax/Lift Board if necessary. |
| **Striding Belt slips during footfall.** | Striding belt slips on front roller during stall test. | Check striding belt & re-tension as necessary. See How…To Adjust Belt Tension. |
| **Maximum speed is reduced.** | User is pushing striding belt. | Instruct users not to push striding belt in either direction. |
| | Wax system malfunction. | Verify wax nozzle is clean, hoses are not kinked, wax bag is not empty, or wax is contaminated. |
| | Striding belt/deck malfunction. The deck laminate worn through or the underside of striding belt glazed over (hard, glossy). | Replace belt and deck. See How To…Replace Striding Belt. |
| | Insufficient power source. | Plug treadmill into a proper electrical configuration. Refer to the Operations Manual. |
| **Knocking sound at rear of machine.** | Faulty rear roller bearings. | Replace rear roller assembly. |
| | Wax build-up on rear roller. | Run unit for 10 hours to break-in the treadmill, or clean the roller as necessary. |
| **Knocking sound coming from deck.** | Life Springs not positioned correctly and/or loose mounting hardware. | Reposition or tighten life springs. |

# TROUBLESHOOTING GUIDE

| SYMPTOM | PROBABLE CAUSE | CORRECTIVE ACTION |
|---|---|---|
| **Rubbing sound from underneath machine.** | Foreign objects may be stuck underneath the machine. | Inspect underneath striding belt and machine. Remove any debris or objects that may cause interference with the treadmill. |
| | Tinsel is installed incorrectly. | Reposition tinsel on the outside of the striding belt. |
| **Display reads immobilized.** | Immobilized feature is activated. | Press and hold the SPEED Down Arrow Key and press the Pause Key to toggle ON/OFF. |
| **Squeaking noise.** | Drive Motor Belt tensioning pin may be squeaking. | Clean and lubricate as necessary. |
| | Drive Motor Belt may be worn or damaged. | Replace Drive Motor Belt. See How To… Replace Drive Motor Belt. |
| **Loud groaning sound heard from front of machine while elevating.** | Lift mechanism pivot points are dry. | Clean and lubricate as necessary. |
| | Faulty lift motor. | Replace the lift motor. See How To…Replace Lift Motor. |
| | Obstruction. | Inspect wheels or flooring for damage. |
| **Loud groaning on footfall.** | High friction between deck and striding belt. | Refer to Belt and Deck Test in Diagnostics. |
| **Display overlay keys are not responding when depressed.** | Loose ribbon connection(s). | Test the Key Pad function. See Diagnostics in this Section. Verify that the two ribbon connections are attached to the display PCB. Test Key Pad function.<br>If attached, reseat the connection and verify the operation. |
| | Worn or defective overlay assembly. | Replace overlay assembly. See How To… Replace Overlay Assembly. |
| **Unit resets randomly or pauses.** | Insufficient power source. | Plug treadmill into a proper electrical configuration. Refer to the Operations Manual. |
| | Damaged ground prong on line cord. | Replace line cord. See How To… Replace Line Cord. |
| | Line cord improperly seated in electrical outlet. | Inspect power connection at electrical outlet and at machine for proper contact. |
| | Emergency stop magnet not engaged. | Re-engage the emergency stop magnet. |
| | Towel or magazine may be making contact with stop switch while user is running. | Move all possible obstructions off display console and handlebar. |
| | Loose connections at display console. | Secure all connections at display console PCB. |

# TROUBLESHOOTING GUIDE

| SYMPTOM | PROBABLE CAUSE | CORRECTIVE ACTION |
|---|---|---|
| **Unit resets randomly or pauses.** | Stop Switch is activated with very light pressure or returns very slowly after being pressed. | Replace Stop Switch. See How To…Replace Stop Switch. |
| | Stop switch cable not making proper contact. | Re-seat cable from stop switch and verify the operation. |
| | Pinched main wire harness. | Replace the main wire harness. See How To…Replace Main Wire Harness. |
| | Open ground path. | Using voltmeter, check all points for continuity: console pan screws, console mounting screws, handlebar screws, and handrail mounting screws to frame with respect to ground. Ground must be a non-painted surface. |
| | Inspect Smart Stop system. | Disconnect the 4-pin connector and verify if problem exists. If no, replace Smart Stop PCB. See “How To…” Replace Smart Stop PCB. |
| **Wax Leak.** | Loose hose connections. | Inspect hose connections and secure as necessary, replace if necessary. |
| | Faulty connection at bag. | Replace wax bag and plastic coupling. |
| | Pump leaks. | Inspect and replace internal hose as necessary. |
| | Wax bag is torn. | Replace wax bag. See How To…Replace Wax Bag. |
| | Wax pump does not shut off. | Replace wax/lift PCB. See How To…Replace Wax/Lift PCB. |
| | Wax passes through pump and slowly drips from nozzle. | Replace wax motor. See How To…Replace Wax Motor. |
| **The Striding Belt is traveling beyond the tracking limits.** | Striding belt needs to be re-tensioned or tracking needs adjustment. | Refer to belt tensioning or tracking adjustment procedure in operation or service manual. |
| | Worn striding belt or user pushing belt. | Center striding belt according to belt centering technique. See How To...Adjust And Tension The Striding Belt. |
| | Striding belt folded over. | Verify wax in bag. Replace if necessary. See How To…Replace Wax Bag. |
| | | Verify the wax is not contaminated (lumpy). Replace wax bag and wax if contaminated. See How To…Replace Wax Bag. |
| | | Verify the wax nozzle is not clogged. Clean nozzle if clogged. See How To…Replace Wax Nozzle. |

# TROUBLESHOOTING GUIDE

| SYMPTOM | PROBABLE CAUSE | CORRECTIVE ACTION |
|---|---|---|
| **The Striding Belt is traveling beyond the tracking limits.** | Unit is not level. | Refer to the Operation Manual or Service Manual. |
| | Striding belt folded over. | Refer to “Wax Manual” in the diagnostics section of this manual to verify if the wax pump is functioning properly. Replace if necessary. See How To…Replace Wax Pump. Replace the belt and deck. See How To… Replace Striding Belt. |
| **Striding belt not centered.** | Striding belt tension or tracking needs to be adjusted. | Adjust striding belt. See How To…Adjust And Tension The Striding Belt. |
| **Striding belt miss-alignment, but properly tensioned.** | Improper walking/running. | Notify Club Manager. |
| **Lifepulse Heart Rate System does not respond or improper heart rate reading or "Reading Heart Rate" appears in the message center for more than 2 minutes without giving heart rate reading.** | Dirty handlebar sensors. | Wipe sensors with a clean soft cloth. Verify operation. Refer to Diagnostics in Section 2. |
| | User running over 4.5 mph (7.5kph). | For accurate heart rate reading, user must slow down to less than 4.5 mph (7.5kph). |
| | User may have an unusual heart condition. | Have different people grasp sensors to detect any variance. |
| | Loose connections at display console and handlebar. | Secure connections at display console and handlebar. |
| | Faulty heart rate sensors.. | Replace handlebar sensors. See How To… Replace Heart Rate Kit. |
| | Faulty display console PCB. | Replace display console PCB. See How To… Replace Display Console PCB. |
| **Display reads a continuous heart rate reading when hands are removed.** | Harness wires pinched at handlebar or handrail. | If the wires are damaged, replace damaged cables. See How To…Replace Handlebar Assembly. |
| **No Chest Strap detected.** | Chest strap sensors not making good contact with body of user. | Adjust chest strap and moisten sensors to make better contact with skin. |
| | User is out of monitoring range. | Move within 3 ft (1 meter) of receiver |
| | Loose connection at receiver. | Check connection on receiver. See “How To”...Replace Telemetry Receiver. |
| | Faulty chest strap. | Replace chest strap. |

| SYMPTOM | PROBABLE CAUSE | CORRECTIVE ACTION |
|---|---|---|
| **No Chest Strap Detected** | Faulty receiver. | Verify 5VDC at P6 pin 1. If yes, replace transmitter. If no, replace display console PCB. |
| | Telemetry turned OFF. | Enter Manager's Configuration mode and turn telemetry to ON. |
| | Bad connection at Telemetry cable and receiver. | Check cable jack and receiver connection. |
| **Erratic Heart Rate readings.** | Treadmills are located less than 8" (203 mm) apart. | Position treadmills to recommended distances. Refer to the Operations Manual. |
| **Abnormally elevated heart rate readings.** | Electromagnetic interference from television sets and /or antennas. | Move the treadmill a few inches away from the probable cause, or move the probable cause a few inches away from the treadmill, until the heart rate readings are accurate. |
| | Electromagnetic interference from cell phones. | |
| | Electromagnetic interference from computers. | |
| | Electromagnetic interference from cars. | |
| | Electromagnetic interference from high voltage power lines. | |
| | Electromagnetic interference from motor driven exercise equipment. | |
| | Electromagnetic interference from another heart rate transmitter within 3 ft (1m). | |
| **Display Reads: MOTOR CONTROLLER COMM BAD: CHECK HARNESS BETWEEN LIFT & CONTROLLER -P9/P3** | Loose wire harness. | Reset connections at wax/lift PCB connector P9 and motor controller PCB connector P3. |
| **Display Reads: MOTOR CONTROLLER COMM BAD: CHECK POWER TO MOTOR CONTROLLER.** | Bad Motor Controller. | Verify line voltage at P1 on the Motor Controller. If voltage exists, replace motor controller. See "How To…" Replace Motor Controller. Refer to Section 4 Voltage Specifications. |
| **Display Reads: WAX/LIFT BOARD COMM BAD: CHECK POWER ON LIFT** | Bad Wax/Lift PCB. | Verify if the LED 7 (Green) and LED 8 (Red) is lit on the Wax/Lift PCB. If no, replace Wax/Lift PCB. See How To Replace…Wax /Lift PCB. |

| SYMPTOM | PROBABLE CAUSE | CORRECTIVE ACTION |
|---|---|---|
| **Display Reads: BOTH LIFT and CONTROLLER COMM BAD: CHECK HARNESS BETWEEN CONSOLE & LIFT -P1/P1** | Loose wire harness. | Reset connection at Wax/Lift PCB connector P1 and Display Console PCB connector P1. |
| **Display Reads: SYSTEM CONFIGURED TWO WIRED** | Motor Controller is not jumped correctly. | Reset jumper at JM1 on both pins. |
| **Display Reads: INCLINE INOPERATIVE – CONTINUE IF DESIRED** | Level or negative switch. | Refer to the Diagnostics Section 2, Incline Automatic to verify the operation. If replacement is required. See “How To…” Replace Leveler or Negative Switch. |
| | | Inspect wire harness for damage, and replace if needed. |
| | Lift motor adjustment incorrect. | See “How To…Replace the Lift Motor” and refer to the step in the procedure that describes 13-3/4” tube adjustment. |
| | Lift Motor. | Cycle motor in incline manual and verify 120VAC at P7 on Wax/Lift PCB. If not, replace lift motor. See How To Replace…Lift Motor. |
| **Display Reads: HOME SWITCH ERROR** | Lift switches wire harnesses are backward (applies only to 97Ti). | Switch the wire harnesses on the negative and level switches. |
| **Display Reads: NEGATIVE SWITCH ERROR** | Lift switches wire harnesses are backward (applies only to 97Ti decline). | Switch the wire harnesses on the negative and level switches. |
| **Display Reads: WAXER UNPLUGGED** | Defective wire harness or Wax Motor. | Cycle motor in wax manual mode in diagnostics and verify 120VAC at P6 on Wax/Lift PCB.<br>If voltage exists, verify that the cable from the wax/lift PCB to wax motor has continuity. If continuity exists replace wax motor. See How To Replace… Wax Motor. No continuity, replace wire harness. If no voltage exists, replace wax/lift PCB. See How To Replace…Wax/Lift PCB. |
| | Broken, damaged or unplugged harness or Defective Wax/Lift PCB. | Reseat or replace Wax wire harness. |

| SYMPTOM | PROBABLE CAUSE | CORRECTIVE ACTION |
|---|---|---|
| **Display Reads: WAXER UNPLUGGED** | Wax Motor or wire harness. | Cycle motor in wax manual mode in diagnostics and verify 120VAC at P6 on Wax/Lift PCB.<br>If voltage exists, verify that the cable from the wax/lift PCB to wax motor has continuity. If continuity exists replace wax motor. See How To Replace…Wax Motor.<br>No continuity, replace wire harness. If no voltage exists, replace wax/lift PCB. See How To Replace… Wax/Lift PCB. |
| **Display Reads: SMART STOP UNPLUGGED (95Ti and 97Ti are equipped)** | Broken, damaged, or unplugged harness. | Reseat or replace smart stop harness. |
| **Display Reads: CLOCK COMM BAD** | Frame board or bad wire harness. See Diagnostic Test Frame Tag EEPROM. | Verify continuity on wire harness. If continuity exists, replace frame tag PCB. See How To… Replace Frame Tag PCB.<br>If continuity does not exist, replace wire harness. |
| **Display Reads: FRAME TAG UNPLUGGED** | Disconnected wire harness. | Reconnect wire harness. |
| **Display Reads: SCI ERROR** | Bad wire harness connection. | Bad wire harness or noise. Reseat connection and verify operation. If problem exists, reconnect your connection at the display console to wax/lift PCB |
| **Display Reads: DYNAMIC CURRENT TRIP** | Motor Controller, striding belt or deck. | Perform belt and deck test in Diagnostic Section 2.<br>When verifying striding belt tension, an error can be caused when performing a stall test. This can result in the following message: “Cannot Obtain Speed Error”. |
| **Display Reads: CHECKSUM ERROR XXXX** | Display Console | Replace Display Console |
| **Display Reads: NOTIFY MAINTENANCE MOTOR CONTROLLER COMM BAD ERROR** | Motor Controller. | Overheated motor caused by worn or damaged belt and deck. See Belt and Deck Test in Diagnostic Sect 2. |

| SYMPTOM | PROBABLE CAUSE | CORRECTIVE ACTION |
|---|---|---|
| **Display Reads: NOTIFY MAINTENANCE INCLINE TIMEOUT ERROR** | Lift Motor. | Cycle motor in incline manual and verify 120VAC at P7 on Wax/Lift PCB. Replace lift motor. |
| | Level switch, negative switch or wire harness is defective. | In incline manual in diagnostics, verify the operation of the switches. Replace switches if defective. See How To…Replace Switches. |
| | | Verify the wire for continuity, replace wire harness if defective. |
| **Display Reads: NOTIFY MAINTENANCE**<br>**HOME SWITCH ERROR** | Lift switches wire harnesses are backward. This applies only to 97Ti. | Switch the wire harnesses on the negative and level switches. |
| **Display Reads: NOTIFY MAINTENANCE NEGATIVE SWITCH ERROR** | Lift switches wire harnesses are backward. This applies only to 97Ti. | Switch the wire harnesses on the negative and level switches. |
| **Display Reads: NOTIFY MAINTENANCE FRAME TAG UNPLUGGED** | Broken, damaged or unplugged harness. | Re-seat the frame tag wire harness**.** |
| **Display Reads: UNABLE TO OBTAIN TARGET SPEED** | Incorrect power requirements. | Refer to the Operations Manual |
| | Striding belt/deck malfunction. If the deck laminate is worn through or the underside of striding belt is glazed over (hard, glossy). | Perform belt and deck test in Diagnostics Section 2.<br>Replace belt and deck. See How To… Replace Striding Belt. |
| | Motor Controller. | Replace motor controller. |
| **Display Reads: NOTIFY MAINTENANCE SPEED SENSOR ERROR** | Speed sensor or disconnected wire harness. | This error will appear after a workout, but the unit will continue to function. Enter diagnostics, Speed Manual, and look for a RPM reading. If no reading exists, check continuity on the wire harness. No continuity, replace wire harness. If continuity exists, replace speed sensor. |
| **Display Reads: EXTERNAL ROM FAILURE** | Display PCB. | Replace display PCB. |

# TROUBLESHOOTING GUIDE

| SYMPTOM | PROBABLE CAUSE | CORRECTIVE ACTION |
|---|---|---|
| Channels or sound do not change. | Key Pad malfunction. | Run Key pad test in diagnostics. |
| | Interface PC board defective. | Replace Interface PC board. |
| No sound. | Faulty headphones. | Replace headphones. |
| | Faulty headphone jack assembly. | Replace headphone jack assembly. |
| | Faulty cable to Headphone jack assembly | Replace Headphone jack assembly. |
| | Problem on the single board computer | Replace Single Board Computer. |
| | Problem on Interface board | Replace Interface Board |
| | Air/cable setting may not be correct. | Follow the setup procedures in the operator manual. |
| Unable to receive any channels when using cable. | Air/cable setting may not be correct. | Follow the setup procedures in the operator manual. |
| | 75 ohm coax may be bad. | Replace 75 ohm coax. |
| | 75 ohm coax may be unplugged. | Make sure cable is properly secure. |
| Snow and noise appear on the screen. | Air/cable setting may not be correct. | Follow the setup procedures in the operator manual. |
| | 75 ohm coax may be bad. | Replace 75 ohm coax. |
| Screen is blank or dark | LCD Back Light | Replace/reconnect LCD/Touch Screen |
| | Back Light power inverter bad | Replace/reconnect backlight inverter |
| | LCD Screen failure | Replace/reconnect LCD/Touch Screen |
| | Problem on the single board computer | Replace Single Board Computer. |
| Screen Does not respond to touch. | Touch screen failure. | Replace/reconnect LCD/Touch Screen |
| | Problem with Single Board Computer. | Replace Single Board Computer. |
| The wrong buttons activate when the touch screen is touched. | Touch Screen not calibrated correctly | Calibrated touch screen in diagnostics |
| | | Replace LCD/Touch Screen |

# TROUBLESHOOTING GUIDE

| SYMPTOM | PROBABLE CAUSE | CORRECTIVE ACTION |
|---|---|---|
| Screen does not turn ON and no sounds | No power. | Check Wax/lift board for 12 & 5 volts DC and replace if faulty. |
| | | If Wax/Lift board ok check wire harnesses and connectors. |
| No beeps are heard at power up. After 15-20 seconds console shows “System Comm Init time-out…..” error message. | Interface Board did not power up. | Check Interface Board power cable.<br>Check power and cable coming from Wax/Lift board. |
| Only one beep is heard at power-up. After 15-20 seconds a second beep. | Interface Board wasn’t able to establish communications with all of the treadmill modules. Console shows error message of module that didn’t respond. | Do a System Comm Test in Diagnostics to get more information on what modules are not working properly. |
| One beep is heard at power-up followed by one burp sound. | Interface Board checksum error detected. Console shows “System Comm Init time-out…” error message. | Update Interface Board with the latest software. |
| One beep is heard at power-up followed by 3 beeps. After 15-20 seconds another beep is never heard and the screen stays black. | Console Board did not power up.<br>Interface Board has successfully powered up and all treadmill modules are responding properly. | Check Console Board power cable. |
| One beep is heard at power-up followed by 3 beeps. After 15-20 seconds another beep is heard but the screen stays white. | System is up and running but display cable isn’t connected properly or is faulty. | Check display cable. |
| One beep is heard at power-up followed by 3 beeps. After 15-20 seconds another beep is heard but the screen stays black. | Display inverter isn’t working correctly. | Check for disconnected or faulty inverter cables. Or check inverter board. |
| Only one beep | At power-up | Interface board has power and is up and running |
| Only one beep and then one burp | At power-up | Interface board has power and has detected a checksum error. Unit will not work |
| Only one beep followed by 3 beeps in a row | At power-up | Interface board is up and running and has successfully communicated with all of the treadmill modules |

| SYMPTOM | PROBABLE CAUSE | CORRECTIVE ACTION |
|---|---|---|
| Channels do not change. | Key pad malfunction. | Run Key pad test in diagnostics. Replace if defective. |
| | Interface PC board defective. | Replace Interface PC board. |
| Sound does not change. | Key pad malfunction. | Run Key pad test in diagnostics. Replace if defective. |
| | Interface PC board defective. | Replace Interface PC board. |
| No sound. | Faulty headphones. | Replace headphones. |
| | Faulty headphone jack assembly. | Replace headphone jack assembly. |
| | Faulty cable to Headphone jack assembly | Replace Headphone jack cable. |
| | Air/cable setting may not be correct | Follow the set up procedures in the operators' manual. |
| Unable to receive any channels when using cable. | Air/cable setting may not be correct. | Follow the setup procedures in the operator manual. |
| | Coax Cable may be bad. | Replace Coax Cable. |
| | Coax Cable may be unplugged | Reconnect Cable. |
| Snow and noise appear on the screen. | Air/cable setting may not be correct. | Follow the setup procedures in the operator manual. |
| | Coax cable may be bad. | Replace Coax cable. |
| Screen is blank | LCD Back Light burned up. | Replace LCD/Touch Screen. |
| | Back Light power inverter bad | Replace backlight inverter |
| | LCD Screen failure | Replace LCD/Touch Screen. |
| | Problem on the single board computer | Replace Single Board Computer. |
| Screen is dark. | LCD Back Light burned up. | Replace LCD/Touch Screen. |
| | Back Light power inverter bad | Replace backlight inverter |
| Screen Does not respond to touch. | Touch screen failure. | Replace LCD/Touch Screen. |
| | Problem with Single Board Computer. | Replace Single Board Computer. |
| The wrong buttons activate when the touch screen is touched. | Touch Screen not calibrated correctly | Calibrate Touch Screen in Diagnostics. |
| | Touch Screen Damaged. | Replace LCD/Touch Screen. |
| The no buttons activate when the touch screen is touched. | Touch Screen Damaged. | Replace LCD/Touch Screen. |
| | Failure On the single board computer. | Replace the single board Computer. |
| Screen does not turn ON and no sound. | No power. | Check Wax/lift board for 12 & 5 volts DC and replace if faulty. |
| | Faulty wire harness to console. | Replace Wire Harness |
| Console does not Light up but there are auditable Beeps | Back light inverter defective. | Replace inverter. |
| | LCD defective. | Replace LCD\TOUCH screen |

# TROUBLESHOOTING GUIDE – TESTING THE INVERTER BOARD

Special Service Tools Required: Multi-meter

## CAUTION! HIGH VOLTAGE ON CONNECTORS J2 AND J3

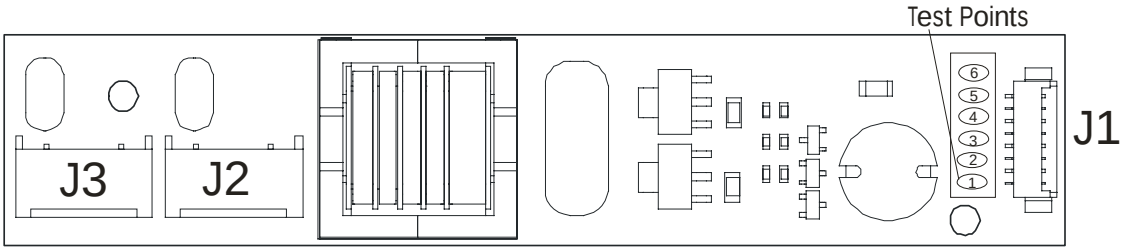


1. Remove the Entertainment System Console from the Unit.
2. Remove Rear Cover from the Console Assembly.
3. Plug in Power Supply and Remote Control to the Console
4. Press the Power On Key on the Remote Control.
5. TEST NO. 1: Place the Red Lead from the multi-meter onto Test Point 1 and the Black Lead onto Test Point 3. Voltage should be 12 Vdc (+/- .5V).
6. TEST NO. 2: Place the Red Lead from the multi-meter onto Test Point 5 and the Black Lead to Test Point 3. Voltage should be 12 Vdc (+/- .5V)

| PROBLEM | SOLUTION |
|---|---|
| No Voltage on TP1 | Replace Cable, Remote, or Main PC Board. |
| | |
| Voltage present on TP1 | Replace the Inverter Board |
| | |
| Voltage on TP1 and TP2 but NO Voltage on TP5 | Replace Cable between Inverter Board and Main PC Board |

| TEST POINT | VOLTAGE | DESCRIPTION | PIN NUMBER |
|---|---|---|---|
| TP 1 & 2 | 12 Vdc | VIN | 1 & 2 |
| TP 3 &4 | 0 Vdc | Ground | 3 & 4 |
| 5 | 12 Vdc | Enable | 5 |
| 5 | 0 Vdc | Disable | 5 |
| 6 | Not Used | Not Used | 6/7/8 |

# TROUBLESHOOTING GUIDE – TESTING THE POWER SUPPLY CABLE

Special Service Tools Required: Multi-meter

1. Unscrew the Retaining Nut securing the Power Cable Plug. Remove the Cable.

2. Using a Multi-meter, touch the Red Lead to the POSITIVE area on the Cable, which is the center of the cable. Next touch the Black Lead to the NEGATIVE area, which is the side of the inner Cable. The voltage should read 12 Vdc.

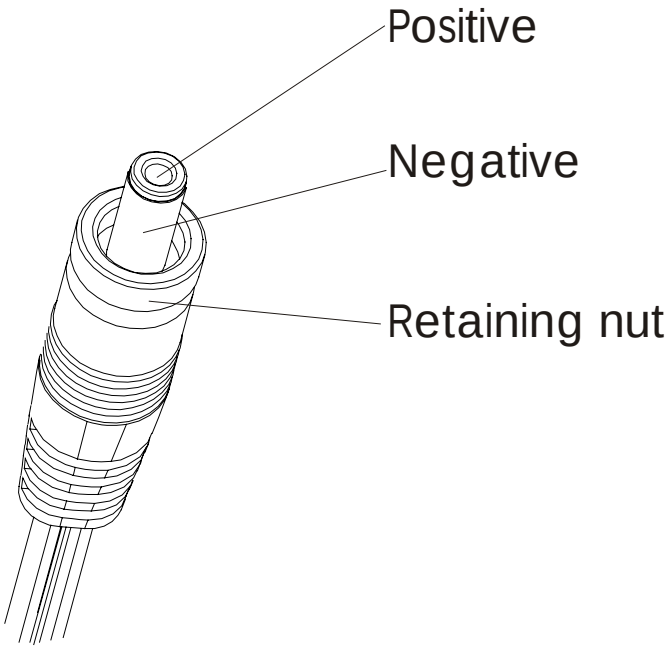

# SECTION IIB

# DIAGNOSTIC MODES FOR 97Te and 95Te LCD UNITS

Page

Welcome Screen ..... 3
Workout Selection Screen ..... 4
System Options Main Menu ..... 5
System Test Menu 1 ..... 6
System Test Menu 1 – System Comm Test ..... 7
System Test Menu 1 – Motor Modules ..... 8
System Test Menu 1 – Key Pad Test ..... 9
System Test Menu 1 – Lifepulse Test ..... 10
System Test Menu 1 – Telemetry Test ..... 11
System Test Menu 2 ..... 12
System Test Menu 2 – Smart Stop Test ..... 13
System Test Menu 2 – EEPROM Test ..... 14
Information ..... 15
Information – Information Statistics ..... 16
Information – Software Versions ..... 17
Information – Main Motor Information ..... 18
Information – Lift Motor Installation ..... 19
Information – Wax Motor Information ..... 20
Information – Information Menu ..... 21
Information – System Errors ..... 22
Information – Maintenance Information ..... 23
Information – Usage Log Report ..... 24
Configuration – Configuration Menu ..... 25
Configuration – Manager ..... 26
Configuration – Custom Message Setup ..... 27
Configuration – Configuration Menu ..... 28
Configuration – Boot Up Configuration ..... 29
Configuration – TV Controls ..... 30
Configuration – Max Volume Setup ..... 31
Configuration- Configuration Menu ..... 32
Configuration – Waxer Configuration ..... 33
Maintenance – Maintenance ..... 34

## Notes

# DISPLAY CONSOLE 97Te and 95Te LCD

## WELCOME SCREEN

**LCD Console Welcome Screen**
The Welcome Screen initially appears after Power-Up or when the bike is not in use. Touching the Screen will change the screen to the WORKOUT SELECTION screen.

# DISPLAY CONSOLE 97Te and 95Te LCD

## WORKOUT SELECTION SCREEN

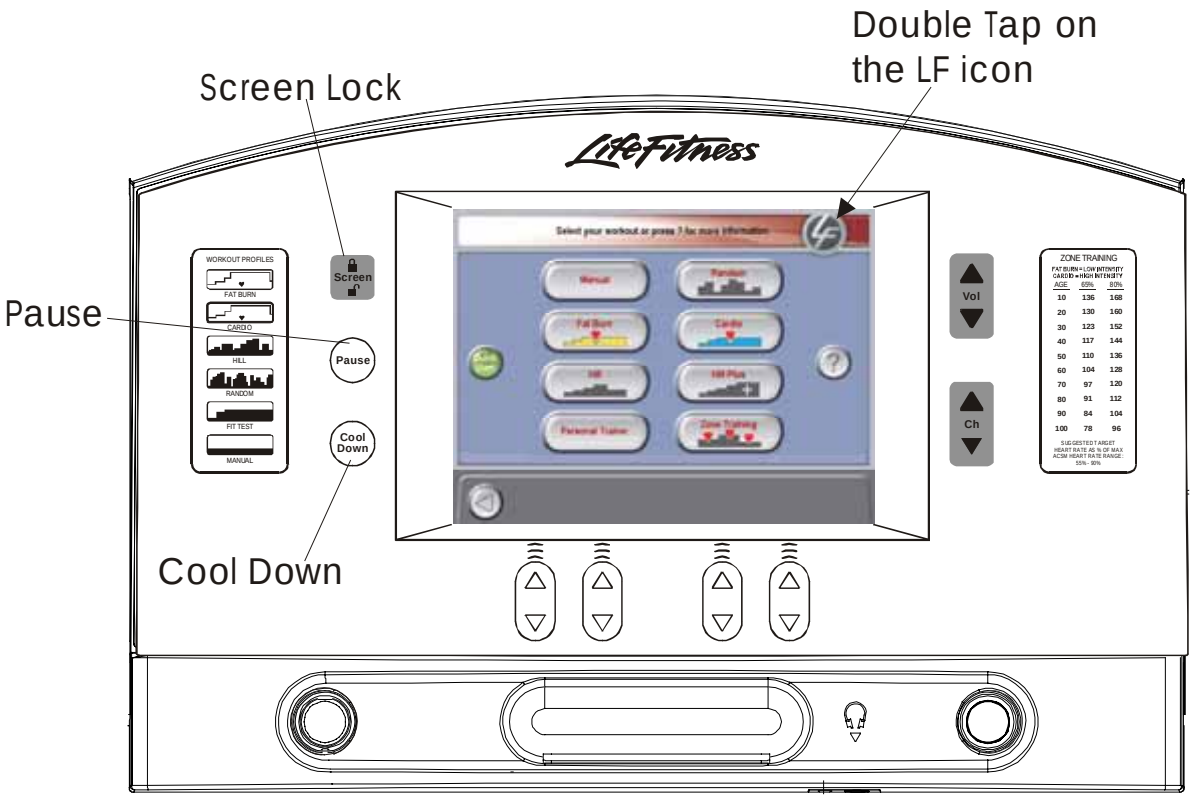

From the Workout Selection Screen you will be able to enter the Systems Option Menu. To enter, go to the Workout Selection Screen then press and hold the COOLDOWN key, and then double-touch the Life Fitness icon.

After entering the System Options the Main Menu will appear. For further information about the programs on this screen, refer to the Operators Manual.

## SYSTEMS OPTIONS MAIN MENU

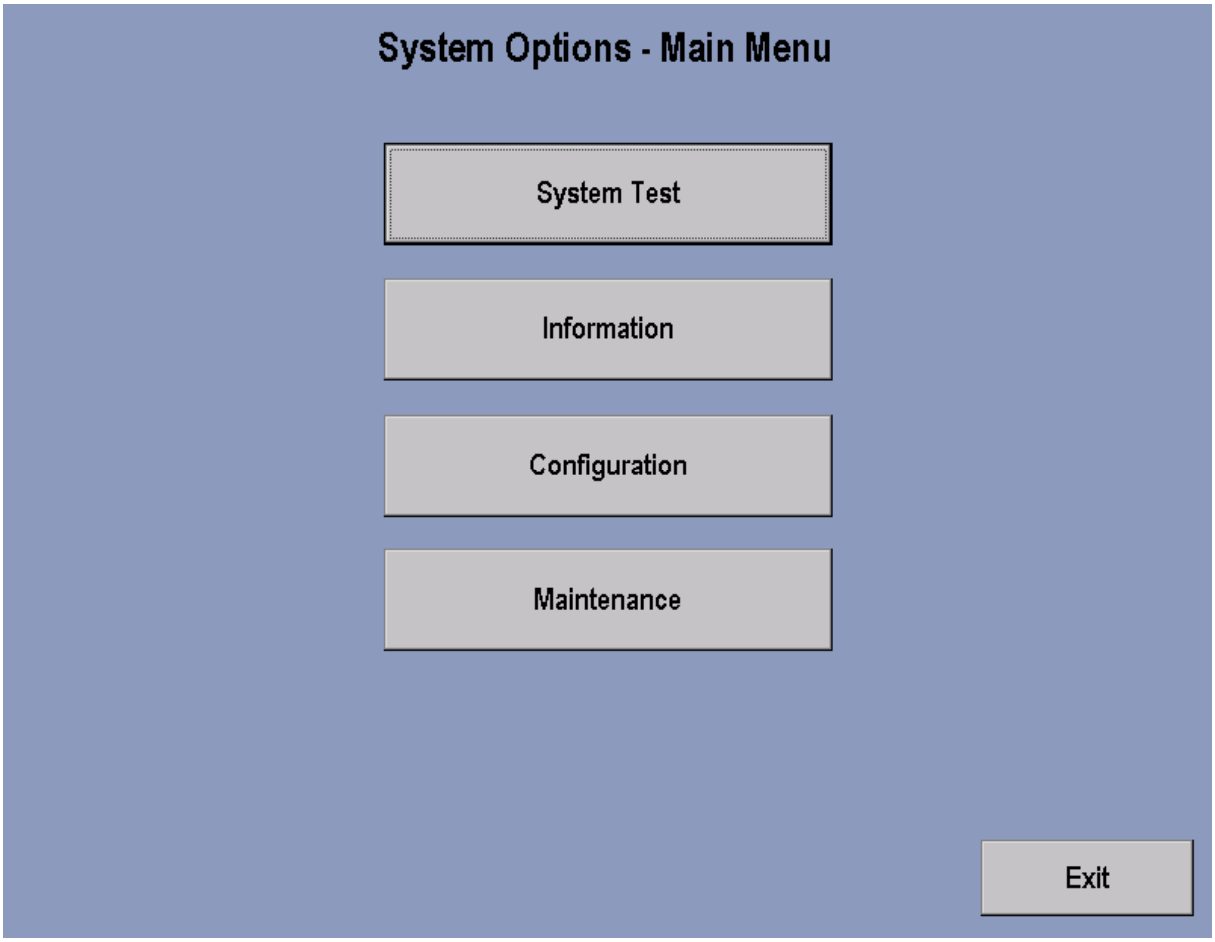


The System Options - Main Menu selections, when pressed, allows access to the System Test Menu, Information Menu, Configuration, and Maintenance. Press the System Test key to enter into System Test Menu 1.

Press the screen Exit key to return back to the Workout Selection Screen.

## SYSTEM TEST MENU 1

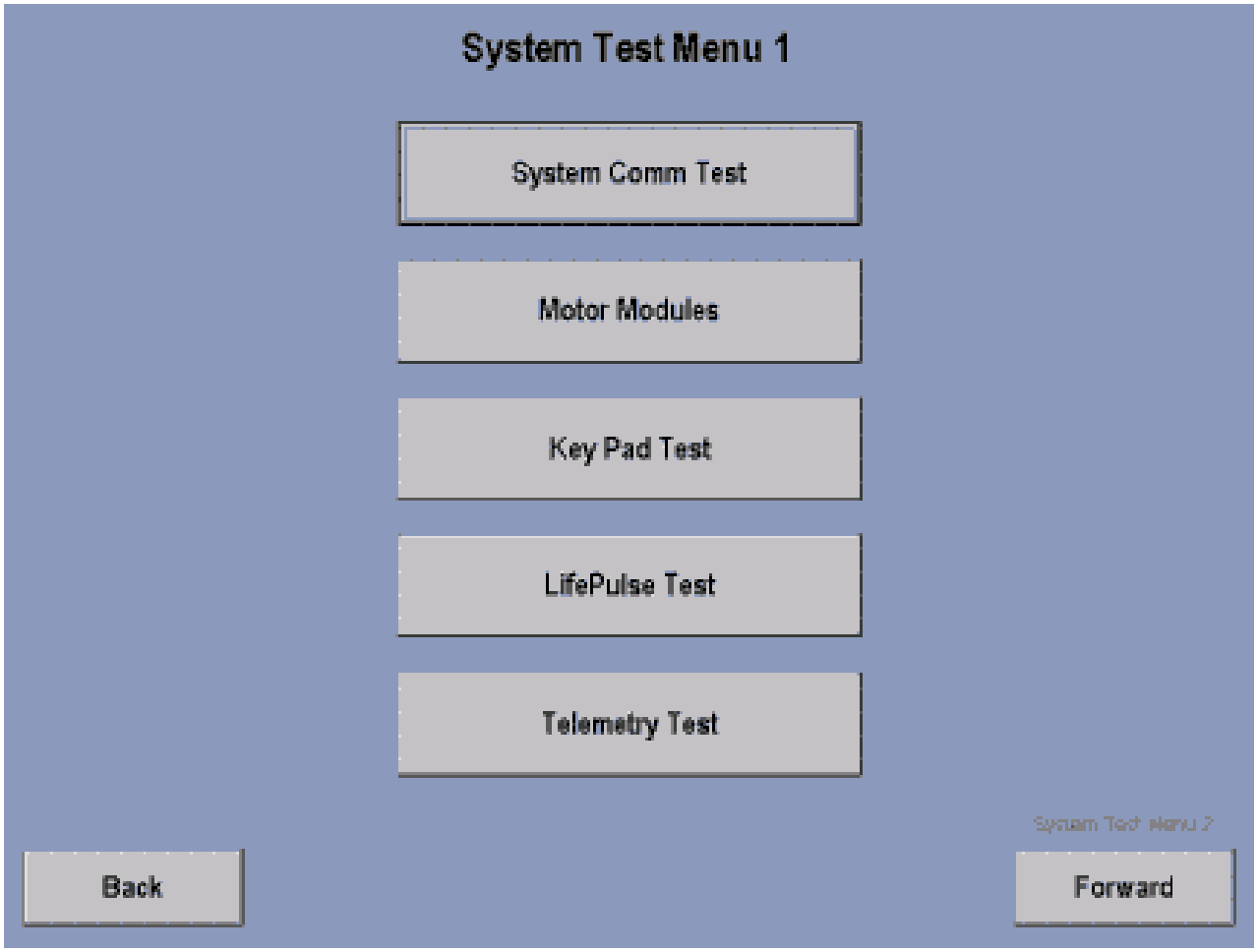


The System Test Menu 1 allows the user to access the above selections by pressing the appropriate key. To return back to the previous page, press the Back key.

NOTE: Press the Forward key will advance the user to System Test Menu 2.

## SYSTEM TEST MENU 1 – SYSTEM COMM TEST

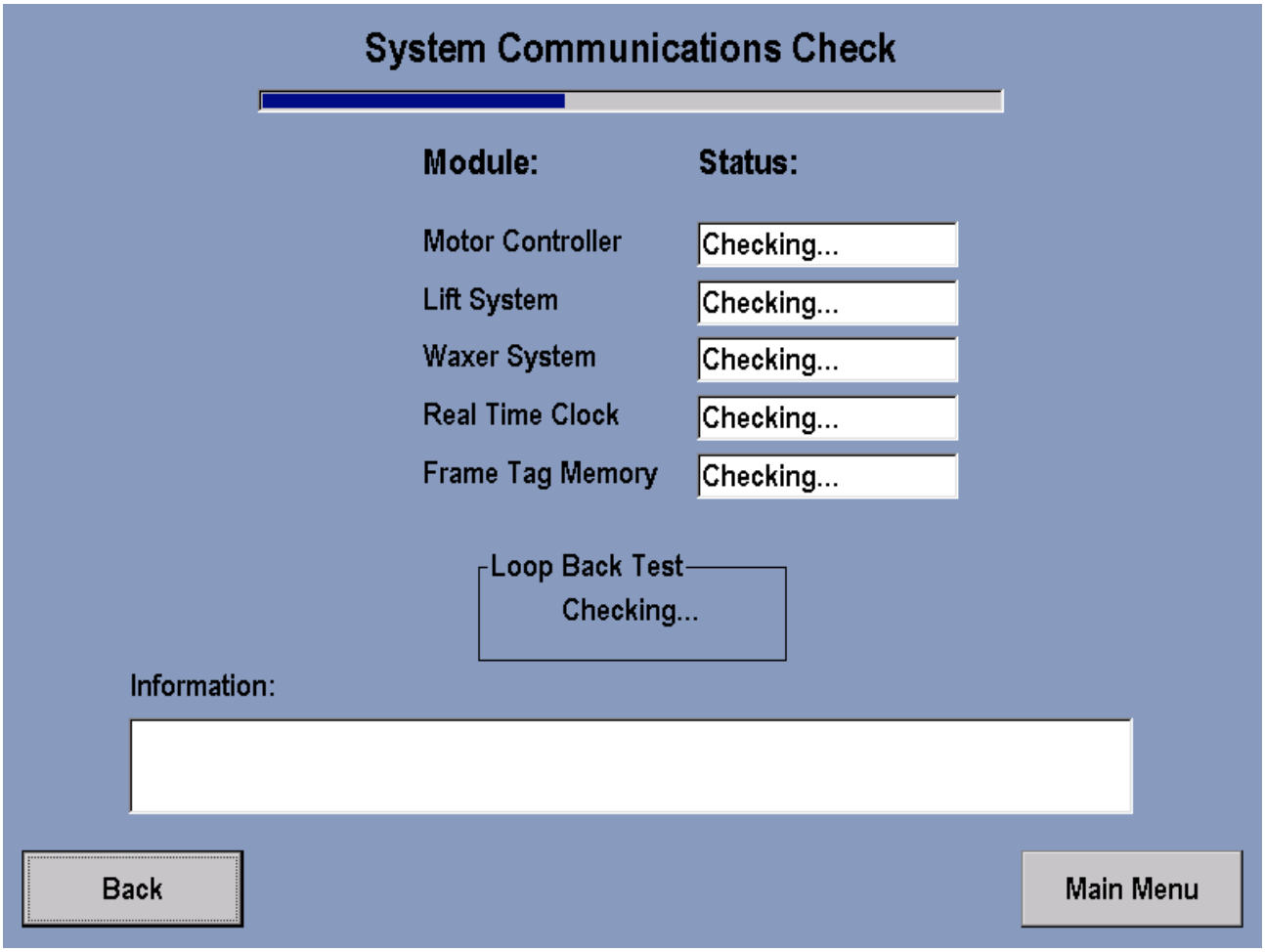


This test communicates with all of the modules within the treadmill. If a module does not respond to the console processor an ERROR message will be displayed in the information window.

To return to the previous page press the Back key. Press the Main Menu key to return back to the System Options – Main Menu Screen.

## SYSTEM TEST MENU 1 – MOTOR MODULES

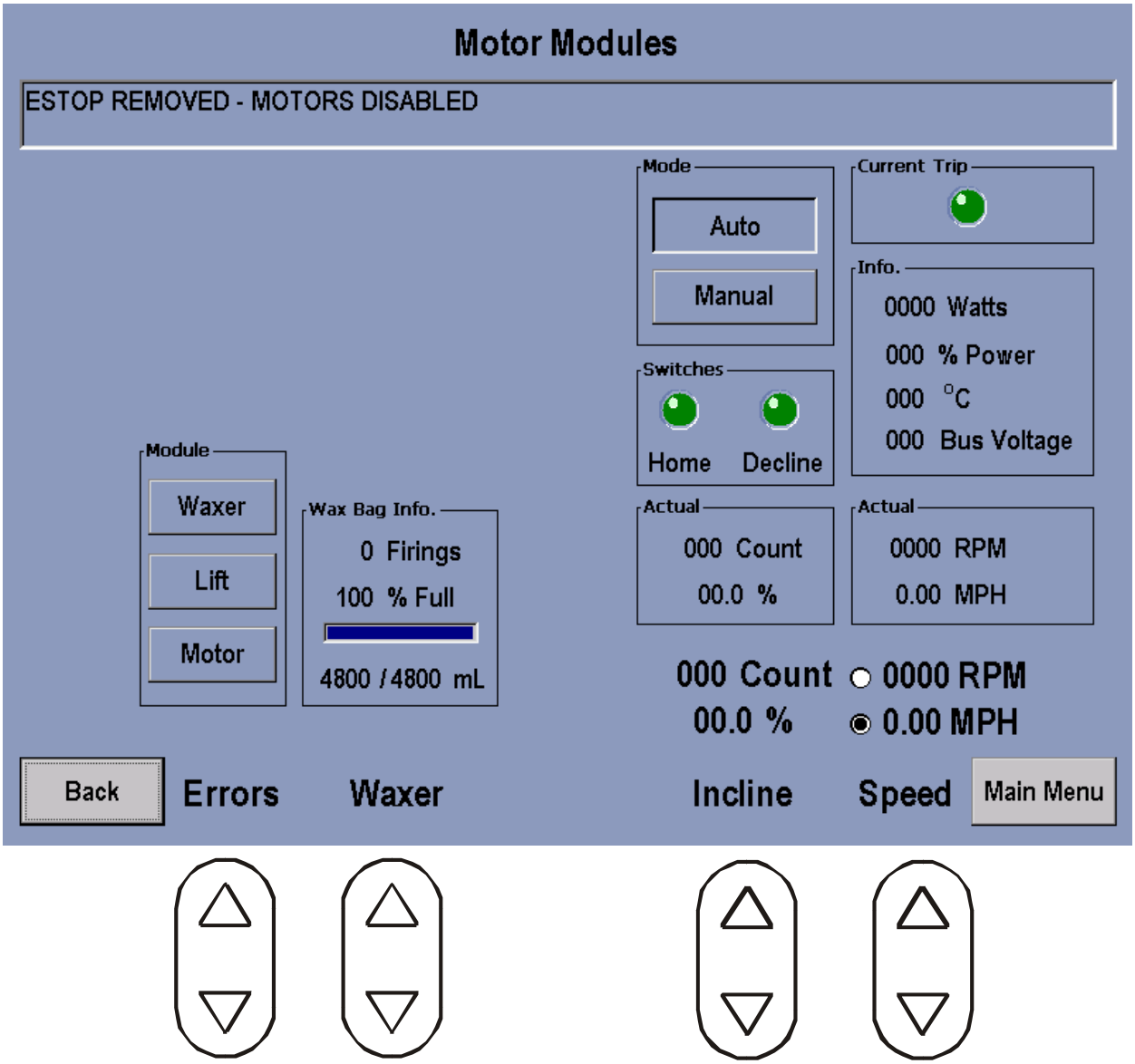


In the Motor Modules Screen all of the Motors and Switches can be tested.

**Error Section**: Upon pressing each of the modules the errors will display in the information window.
**Waxer Section:** Displays current conditions. To test the Wax Pump function, you will need to auto fire the wax pump. Press the Cool Down key once, and then press the UP or Down Arrow Key for wax module mode to test. For 97TE and 95TE Software Version 2.5 and up. For below just press Wax module mode.

**Incline Section**: Using the UP/DOWN ARROWS located under the Incline. Allows you to test the Lift Actuator

**Speed Section:** Using the UP/DOWN ARROWS tests the Drive Motor Function.

**Belt/Deck Test** results will be displayed in the info window in the Speed Section.

To return to the previous page press the Back key. Press the Main Menu key to return back to the System Options – Main Menu Screen.

## SYSTEM TEST MENU 1 – KEY PAD TEST

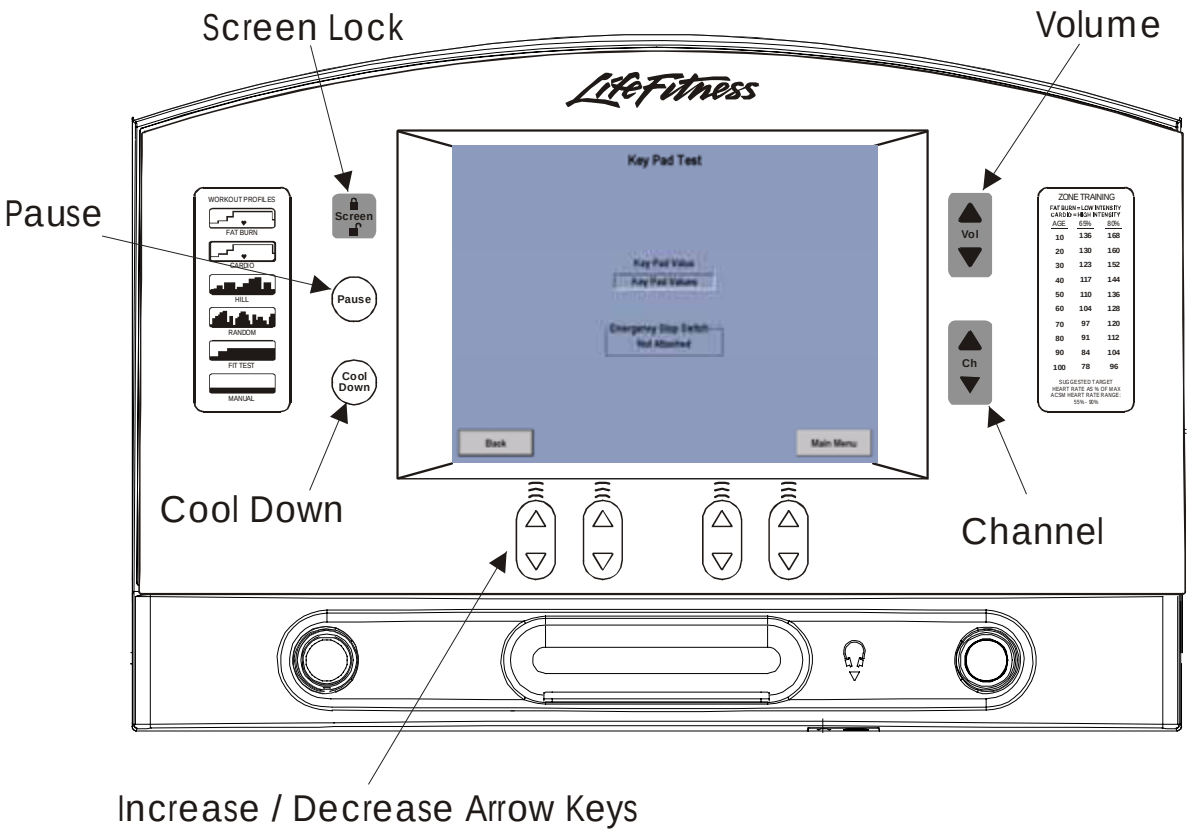


Upon pressing a Key Pad key the name of the key depressed will appear in the Key Pad Value Section of the screen.

To return to the previous page press the Back key. Press the Main Menu key to return back to the System Options – Main Menu Screen.

## SYSTEM TEST MENU 1 – LIFEPULSE TEST

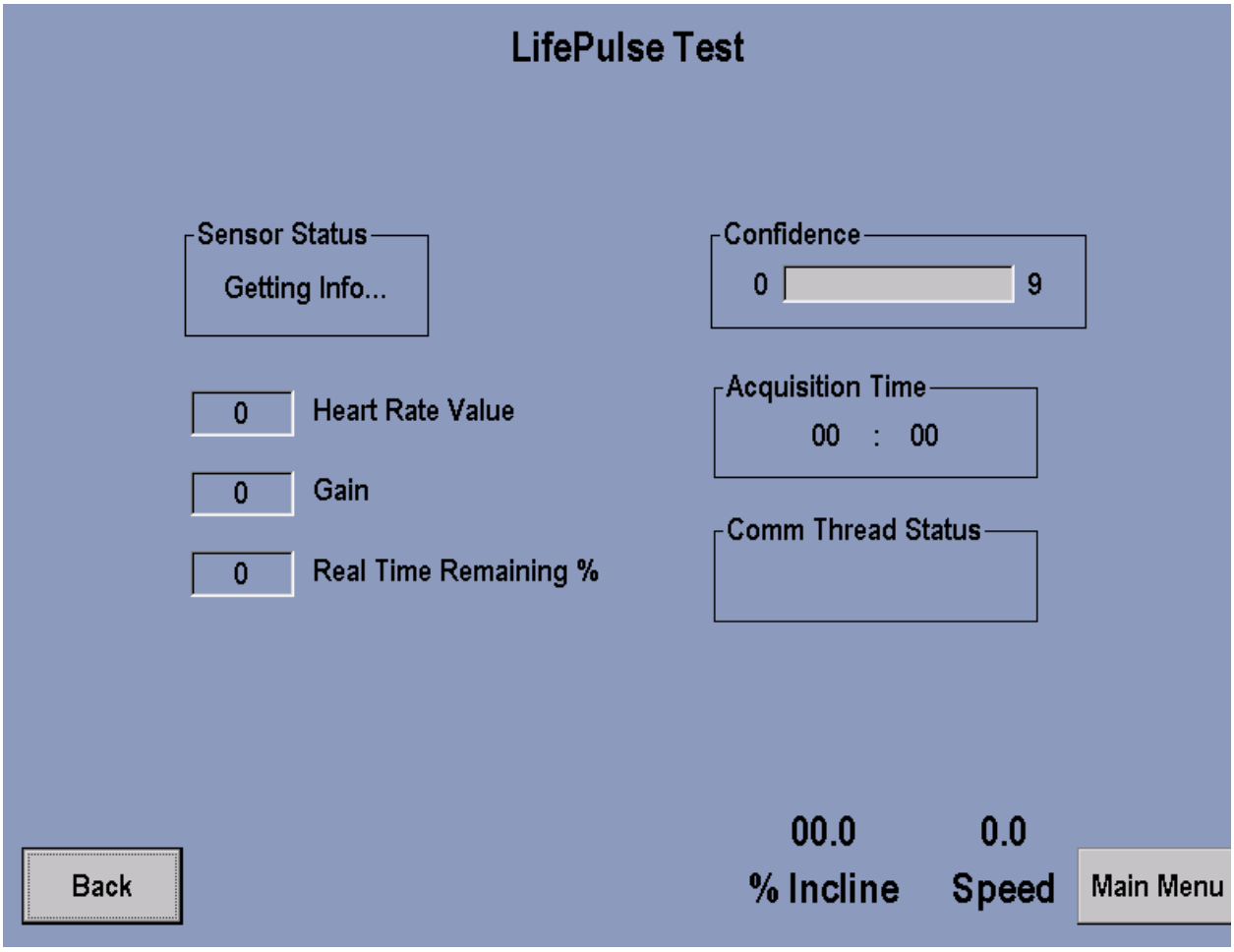


The Lifepulse™ system can be manually tested.

In the Sensor Status window the system will show when the user has placed their hands on the Lifepulse™ sensors. When the left sensor detects hands on condition, a 'Left On' will be placed in the Sensor Status window. When the right sensor detects hands on condition, a 'Right On' will be placed in the Sensor Status window.

Acquisition Time will start counting from the time when a both left and right hands on condition occurs to when the Lifepulse™ system can give the user their heart rate. This timer will stop when the heart rate is given.

The Gain value of the heart rate signal is shown. When 99 is displayed the software is in a search mode.

The Confidence level of the heart rate value is displayed. The value ranges from 0 to 9. A value of 9 is considered to be high confidence. A value of 0 is considered to be low confidence.

The speed system and incline systems can be activated in this test.

To return to the previous page press the Back key. Press the Main Menu key to return back to the System Options – Main Menu Screen.

## SYSTEM TEST MENU 1 – TELEMETRY TEST

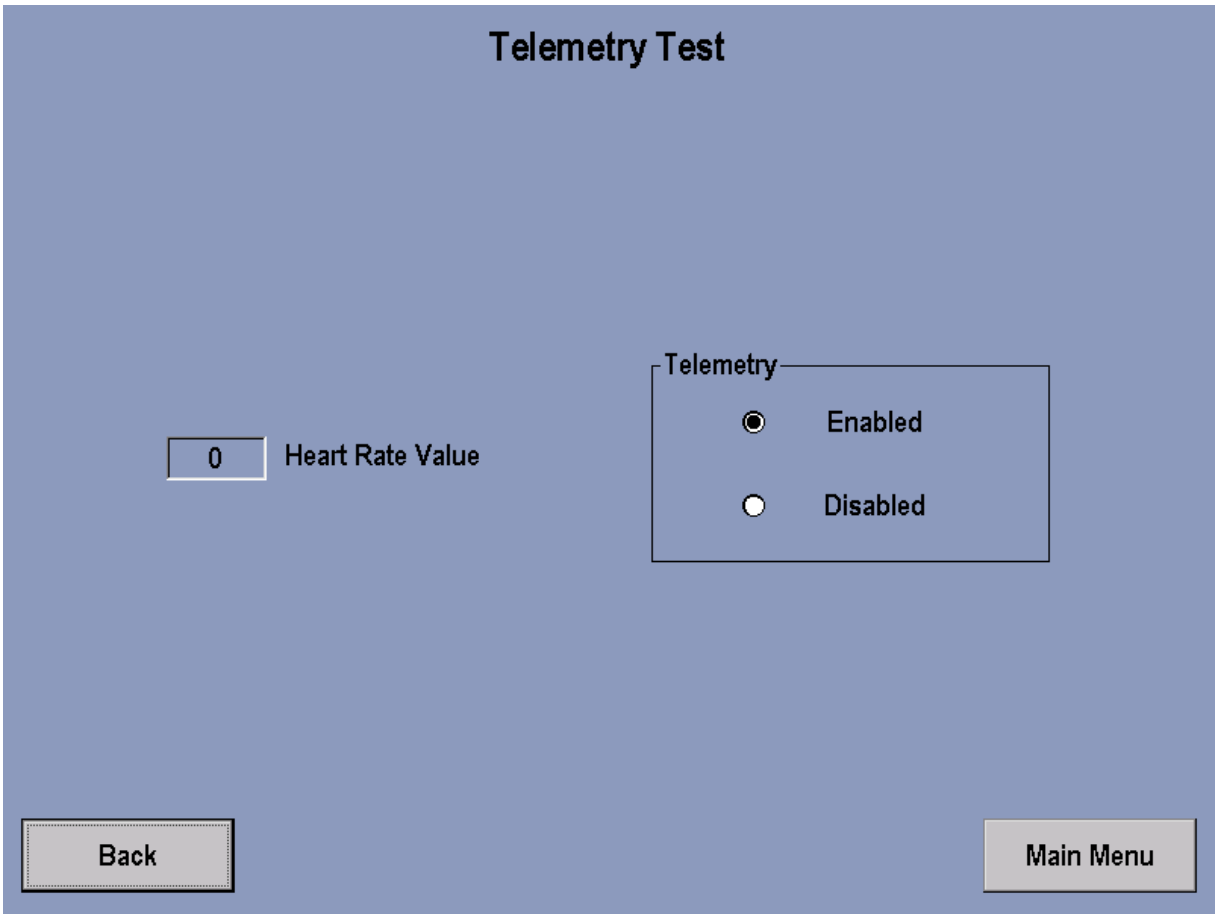


The circles in the Telemetry Box indicate whether Telemetry is Enabled or Disabled. Touching the appropriate circle can enable or disable Telemetry. The Heart rate value window will display the users Heart Rate when Telemetry is enabled.

To return to the previous page press the Back key. Press the Main Menu key to return back to the System Options – Main Menu Screen.

## SYSTEM TEST MENU 2

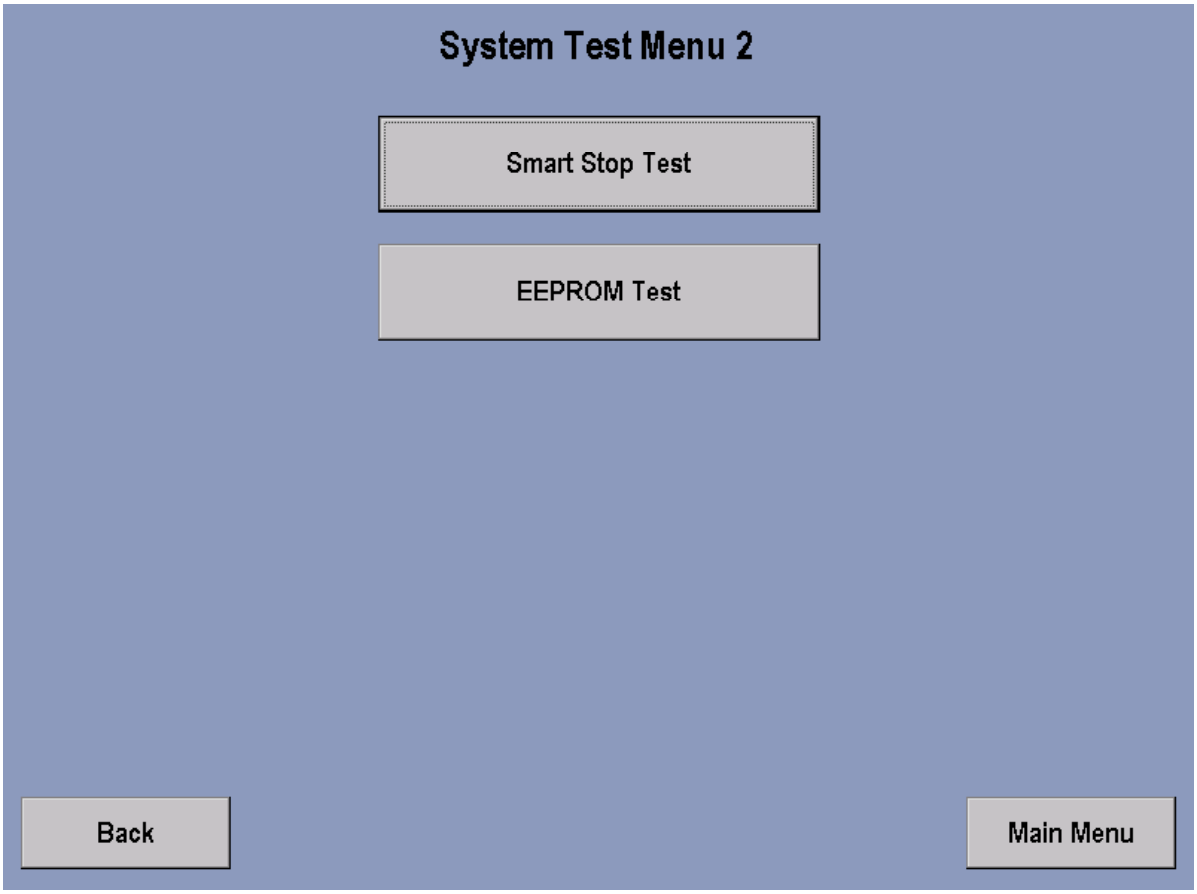


To access System Test Menu 2, you must press the Forward key in the lower right corner of System Test Menu 1.

System Test Menu 2 allows you to test the Smart Stop and EEPROMS

To return to the previous page press the Back key. Press the Main Menu key to return back to the System Options – Main Menu Screen.

## SYSTEM TEST MENU 2 - SMART STOP TEST

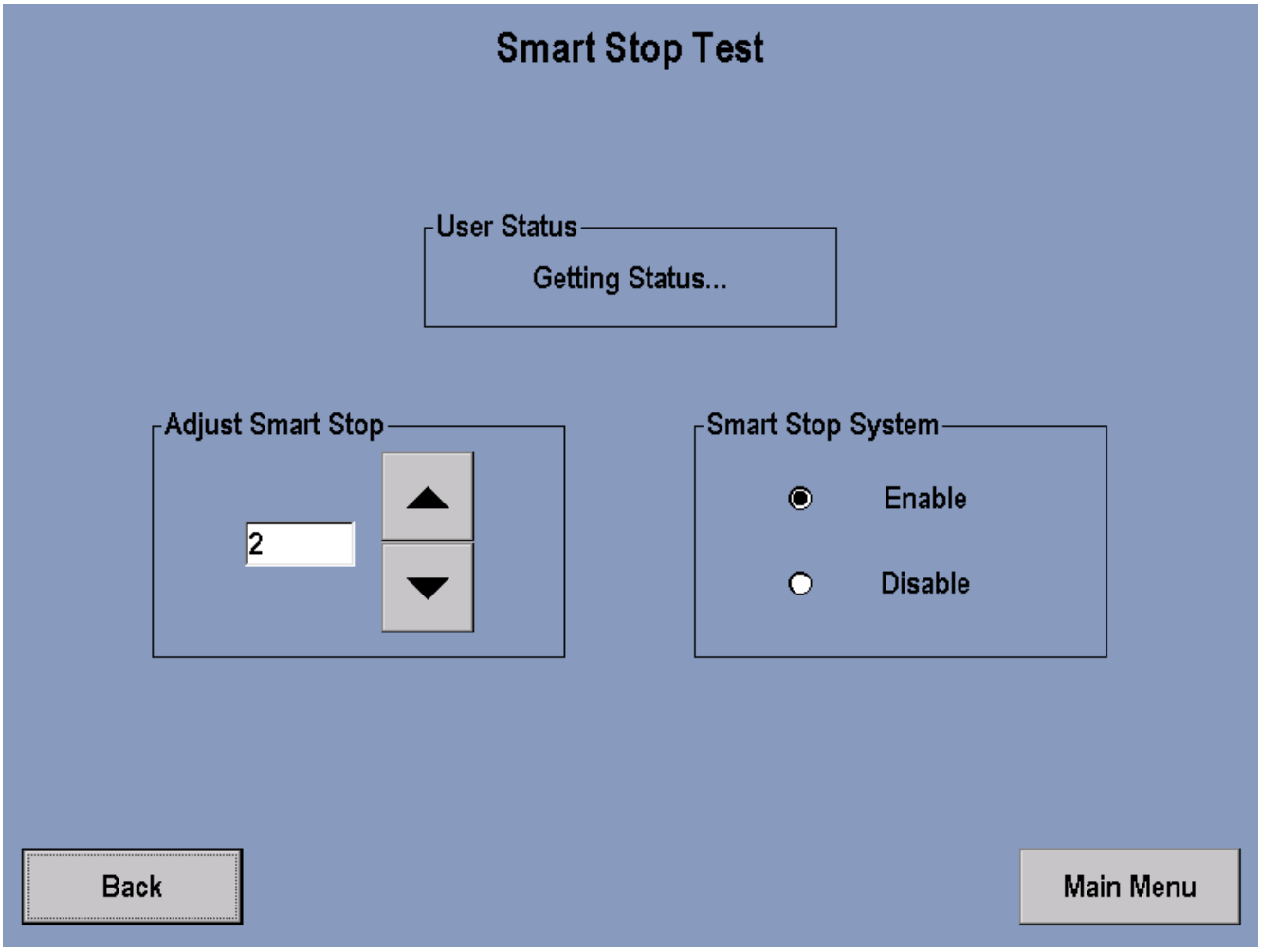


This test, if the Smart Stop System detects a user it will be displayed in the **User Status Window** detected. If the Smart Stop PCB is not plugged in. A message will be displayed in the User Status window as Smart Stop Unplugged.

To return to the previous page press the Back key. Press the Main Menu key to return back to the System Options – Main Menu Screen.

## SYSTEM TEST MENU 2 – EEPROM TEST

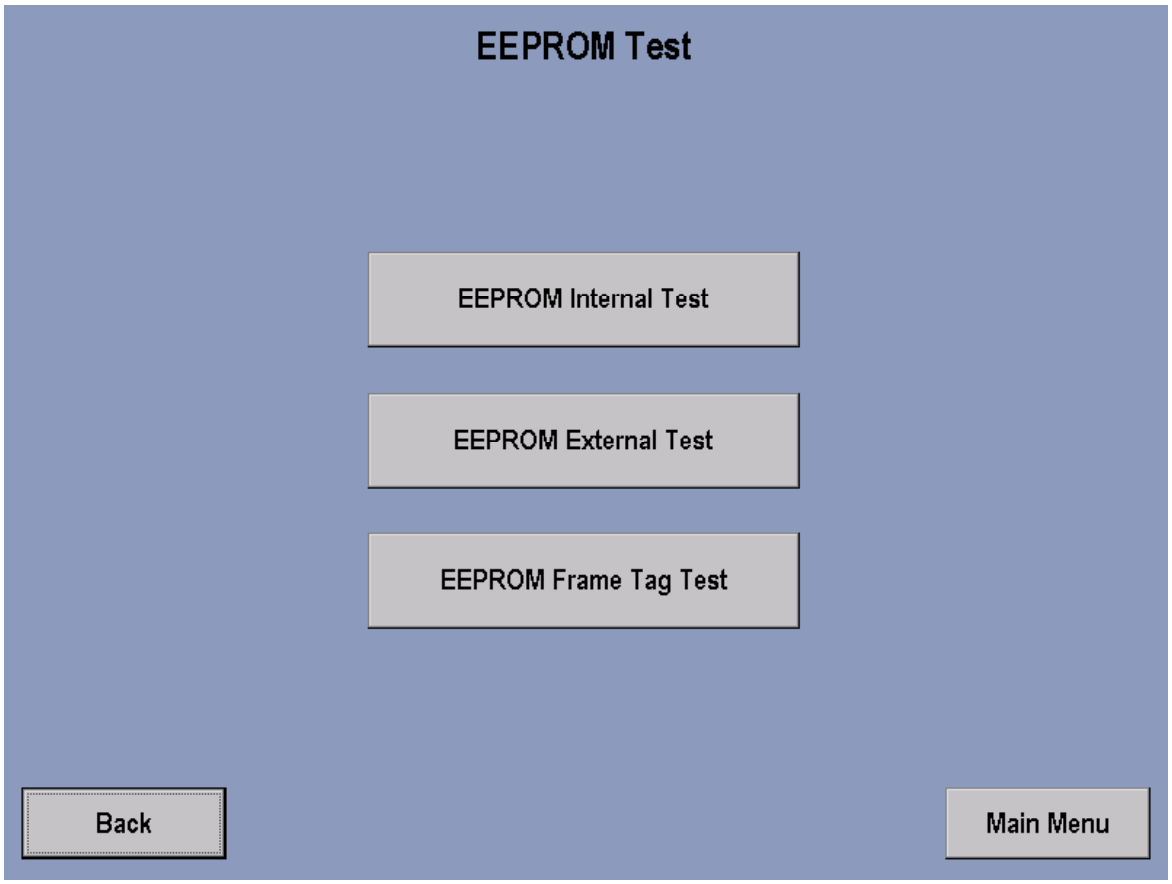


EEPROM Internal Test - checks the Single Board Computer.

EEPROM External Test - checks the interface Board.

EEPROM Frame Tag Test - checks the Frame Tag Board

To return to the previous page press the Back key. Press the Main Menu key to return back to the System Options – Main Menu Screen.

## INFORMATION – INFORMATION MENU

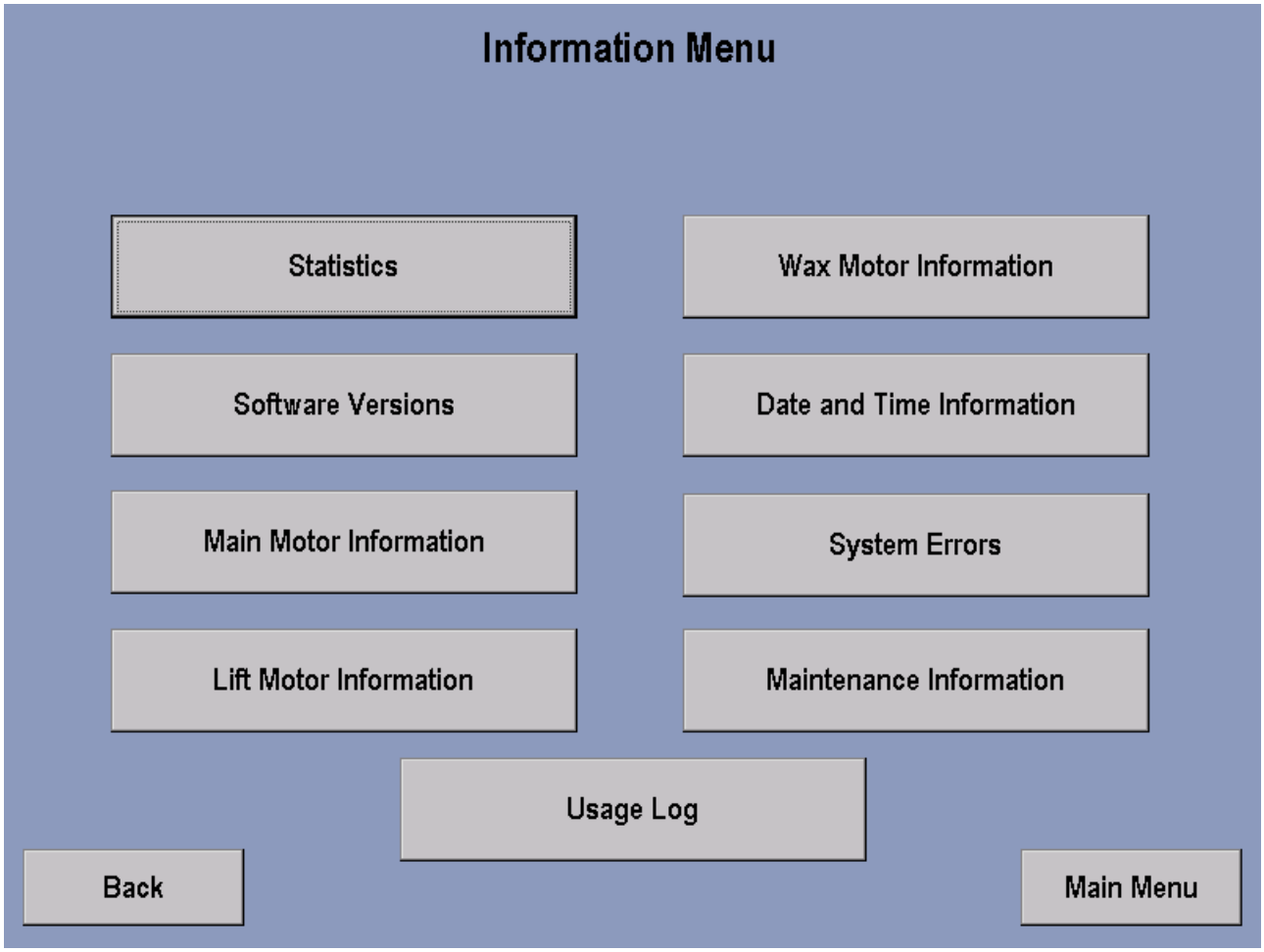


To access the INFORMATION MENU go back to the Systems Option Main Menu and select the Information Menu key on the screen. The Information Menu provides with information pertaining the key selections above.

To return to the previous page press the Back key.  Press the Main Menu key to return back to the System Options – Main Menu Screen.

## INFORMATION – INFORMATION STATISTICS

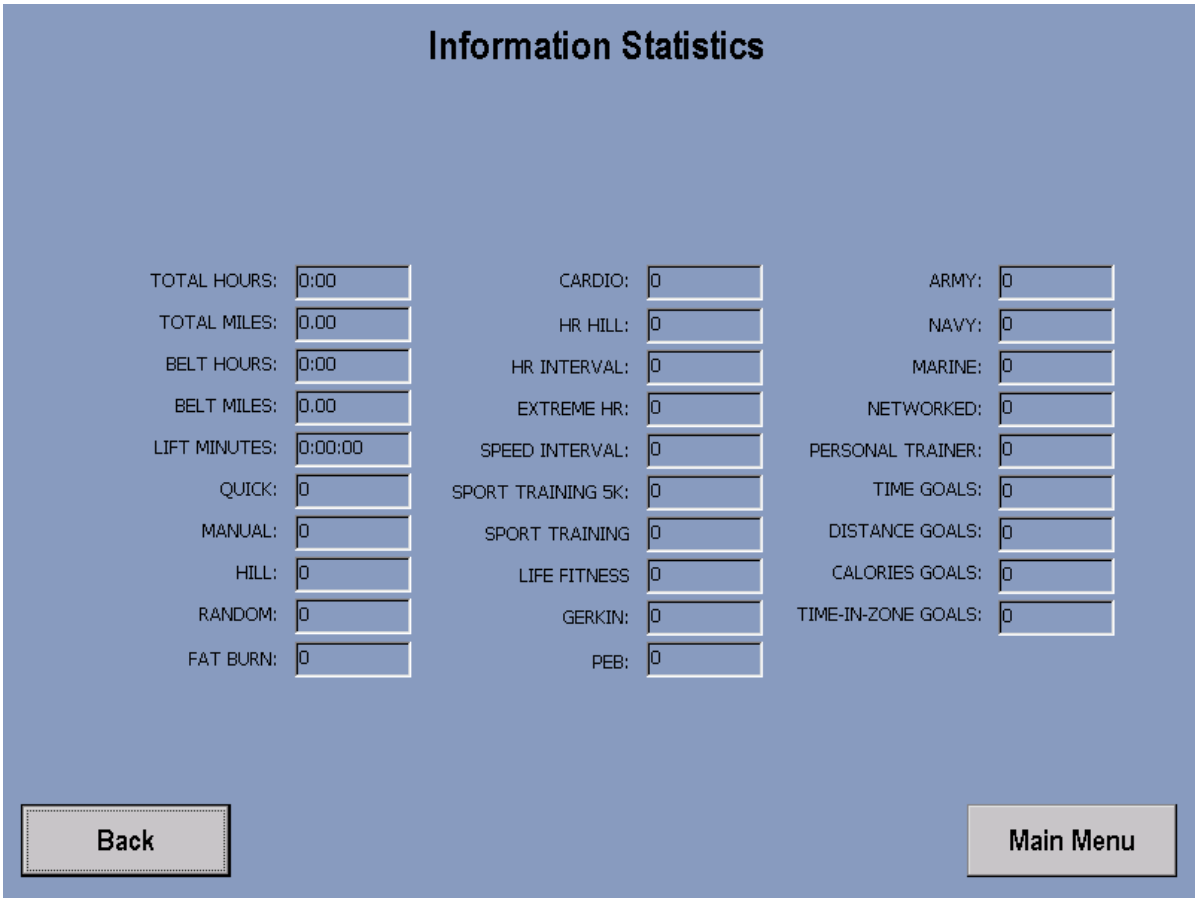


Entry to this screen allows to user to view statistics such as: total hours of use on the unit and hours of use per program used along with other information.

To return to the previous page press the Back key. Press the Main Menu key to return back to the System Options – Main Menu Screen.

## INFORMATION - SOFTWARE VERSIONS

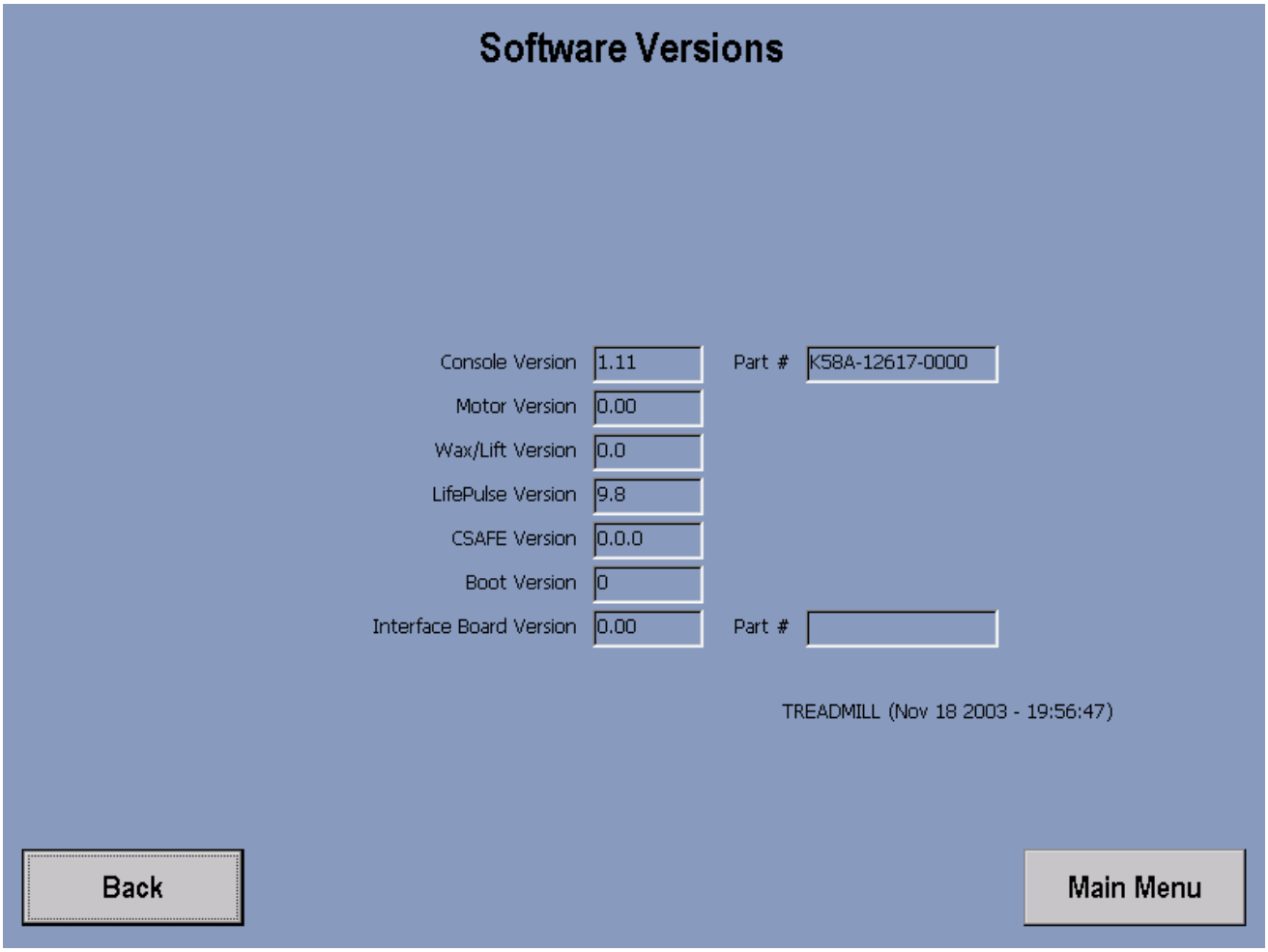


**Note: Values shown are for reference only.**

This screen indicates the current software programs loaded into the unit along with its corresponding Life Fitness part number if applicable.

To return to the previous page press the Back key. Press the Main Menu key to return back to the System Options – Main Menu Screen.

## INFORMATION - MAIN MOTOR INFORMATION

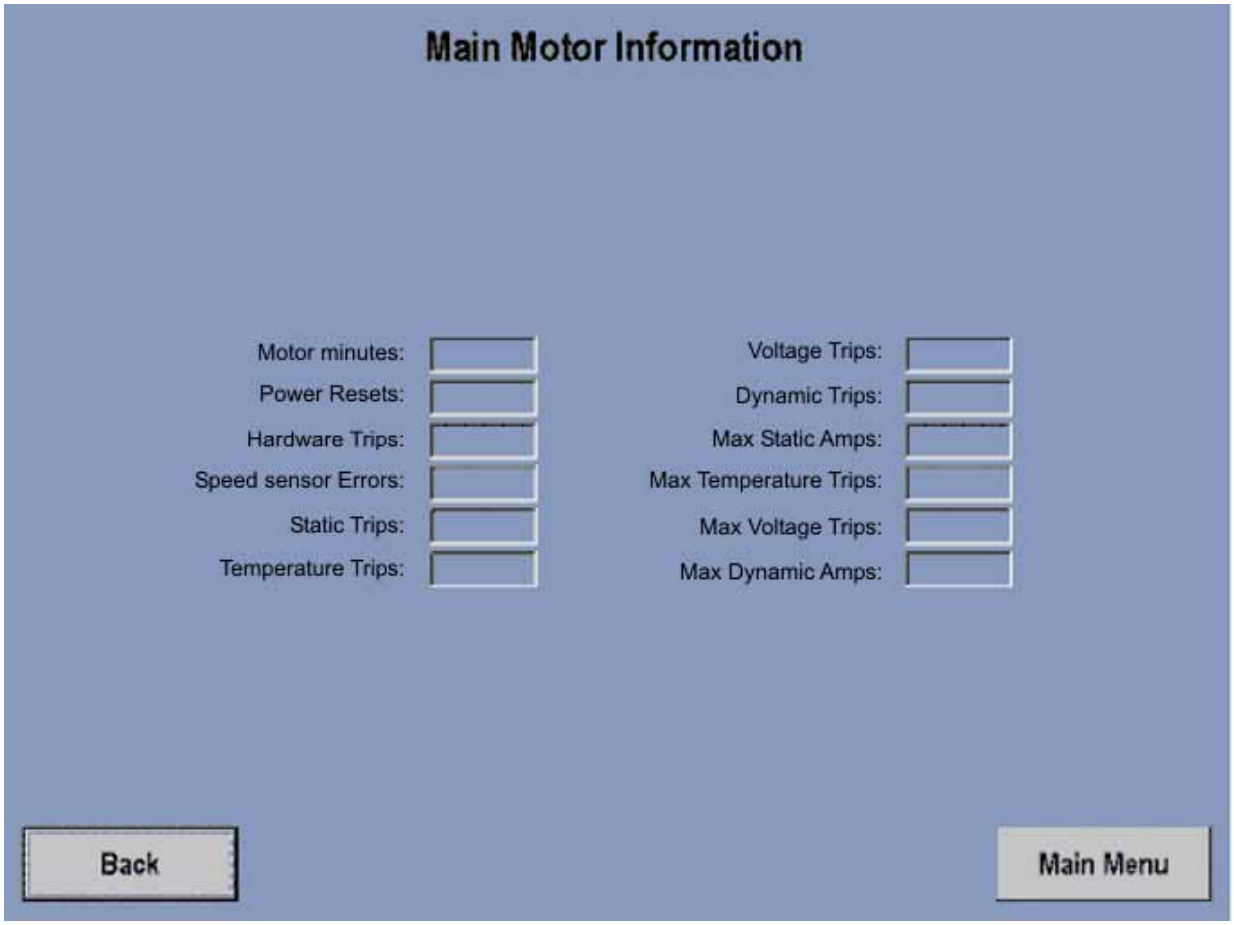


This menu indicates the current information about the main motor and motor controller.

To return to the previous page press the Back key.  Press the Main Menu key to return back to the System Options – Main Menu Screen.

## INFORMATION - LIFT MOTOR INSTALLATION

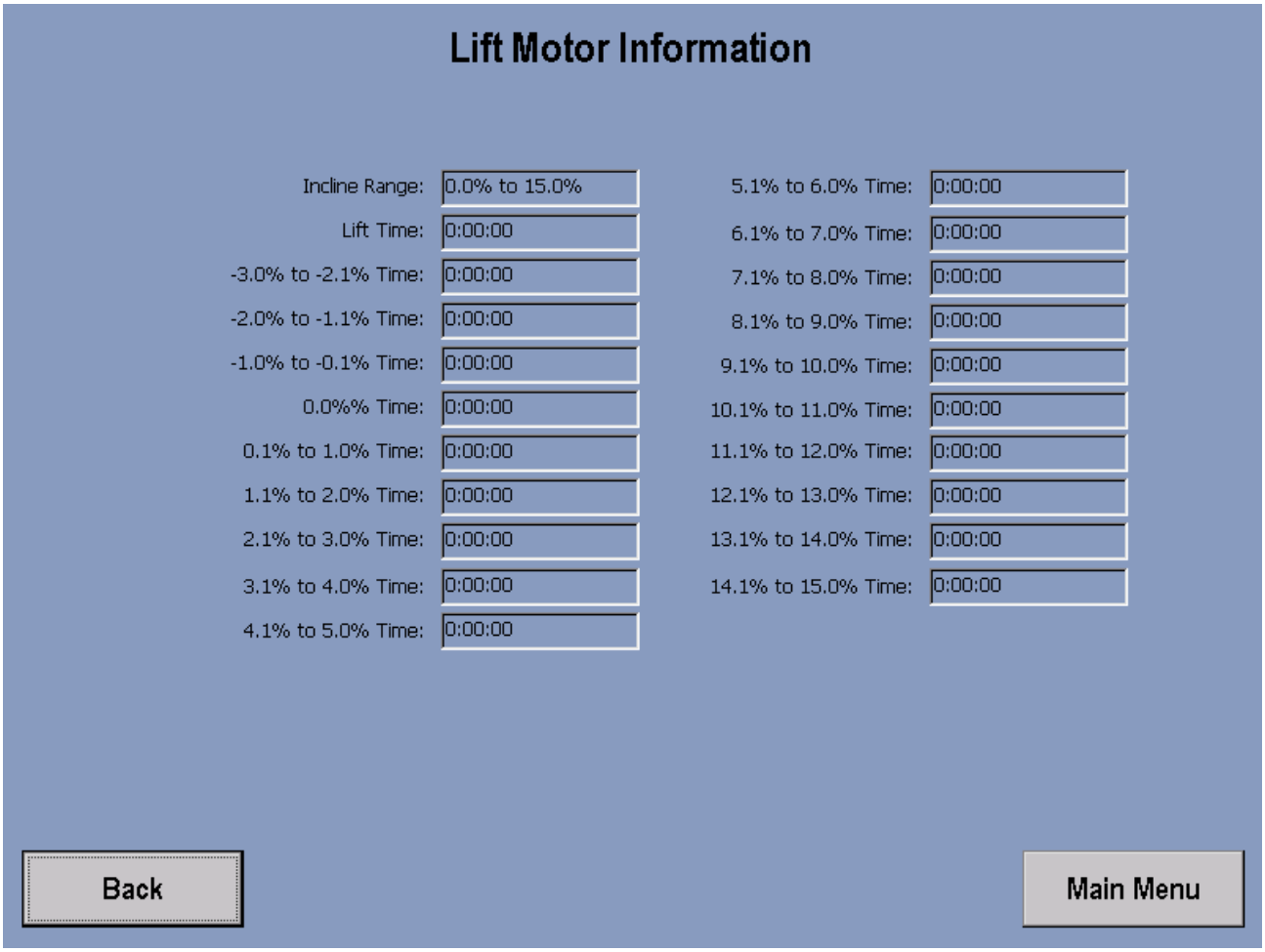


This menu indicates the current information about the lift motor.

To return to the previous page press the Back key. Press the Main Menu key to return back to the System Options – Main Menu Screen.

## INFORMATION - WAX MOTOR INFORMATION

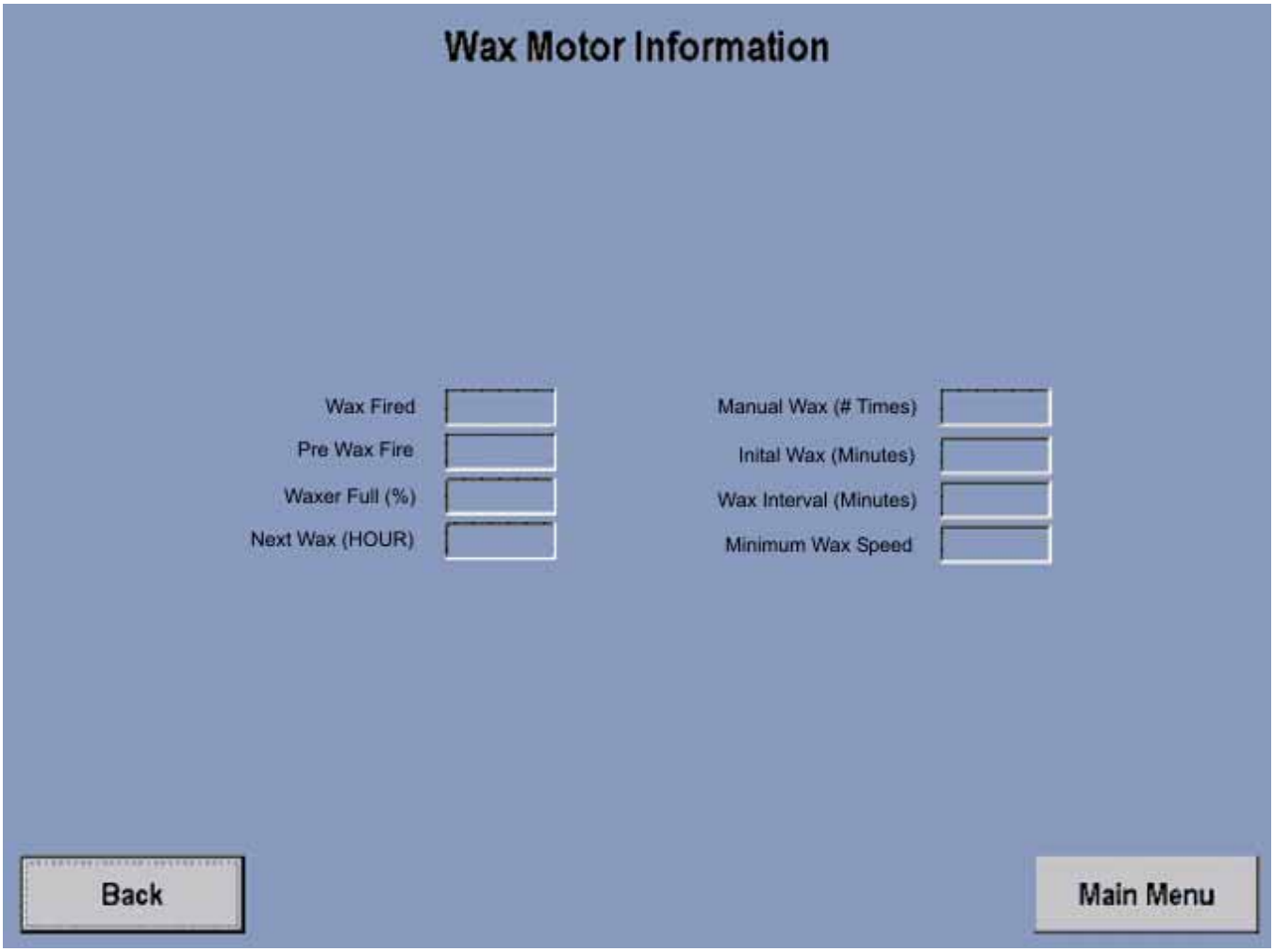


This menu indicates the current information about the wax motor.

To return to the previous page press the Back key. Press the Main Menu key to return back to the System Options – Main Menu Screen.

## INFORMATION – INFORMATION MENU

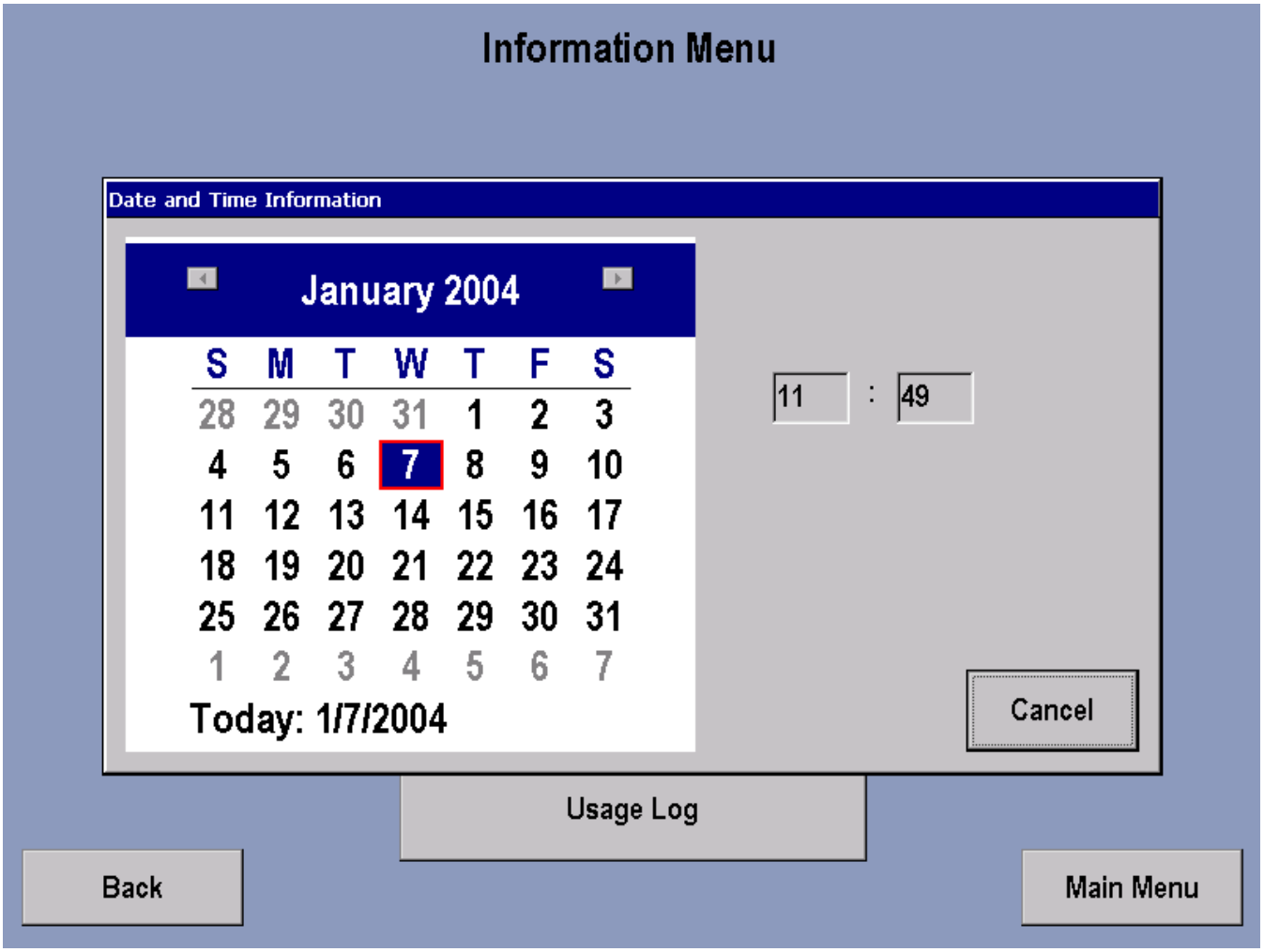


This menu indicates the current information about the real time clock.

To return to the previous page press the Back key. Press the Main Menu key to return back to the System Options – Main Menu Screen.

## INFORMATION - SYSTEM ERRORS

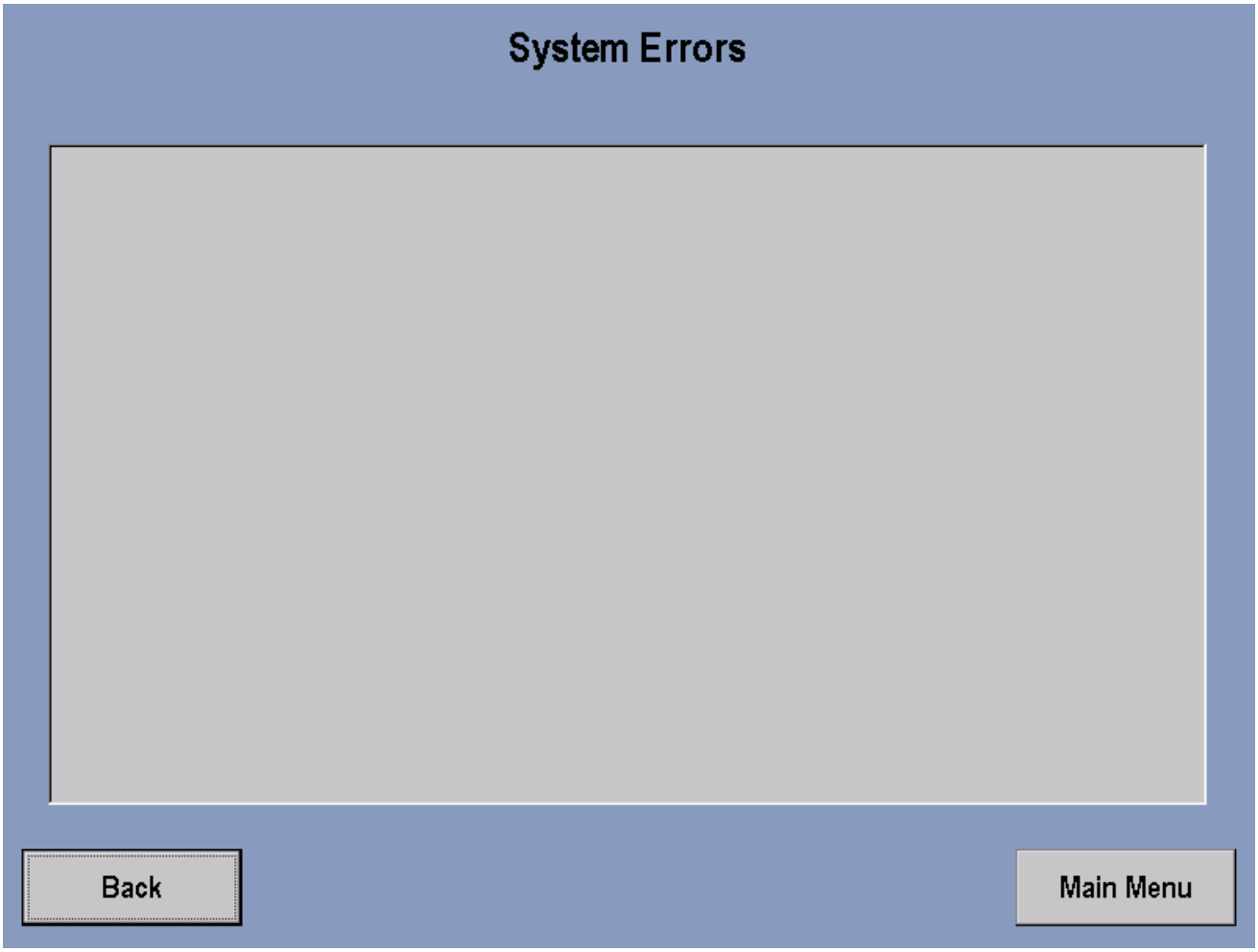


This screen allows the user to view system errors that have been logged into the unit's memory. The most recent error will be displayed first and then subsequent errors.

To return to the previous page press the Back key.  Press the Main Menu key to return back to the System Options – Main Menu Screen.

## INFORMATION - MAINTENANCE INFORMATION

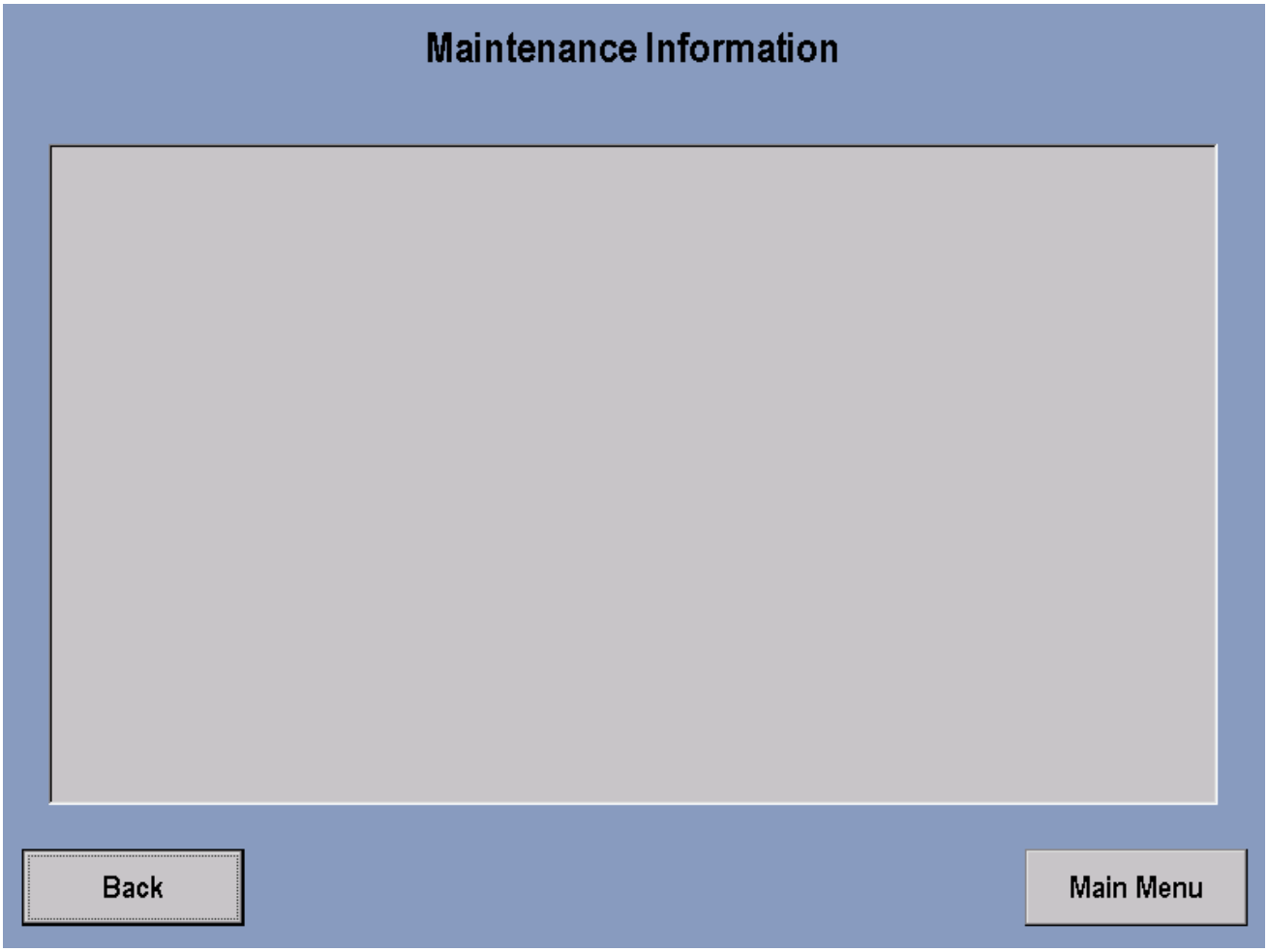


This screen allows the user to see the last 12 logged system repairs. The repair information will be displayed from the most recently logged to the oldest.

To return to the previous page press the Back key.  Press the Main Menu key to return back to the System Options – Main Menu Screen.

## INFORMATION - USAGE LOG REPORT

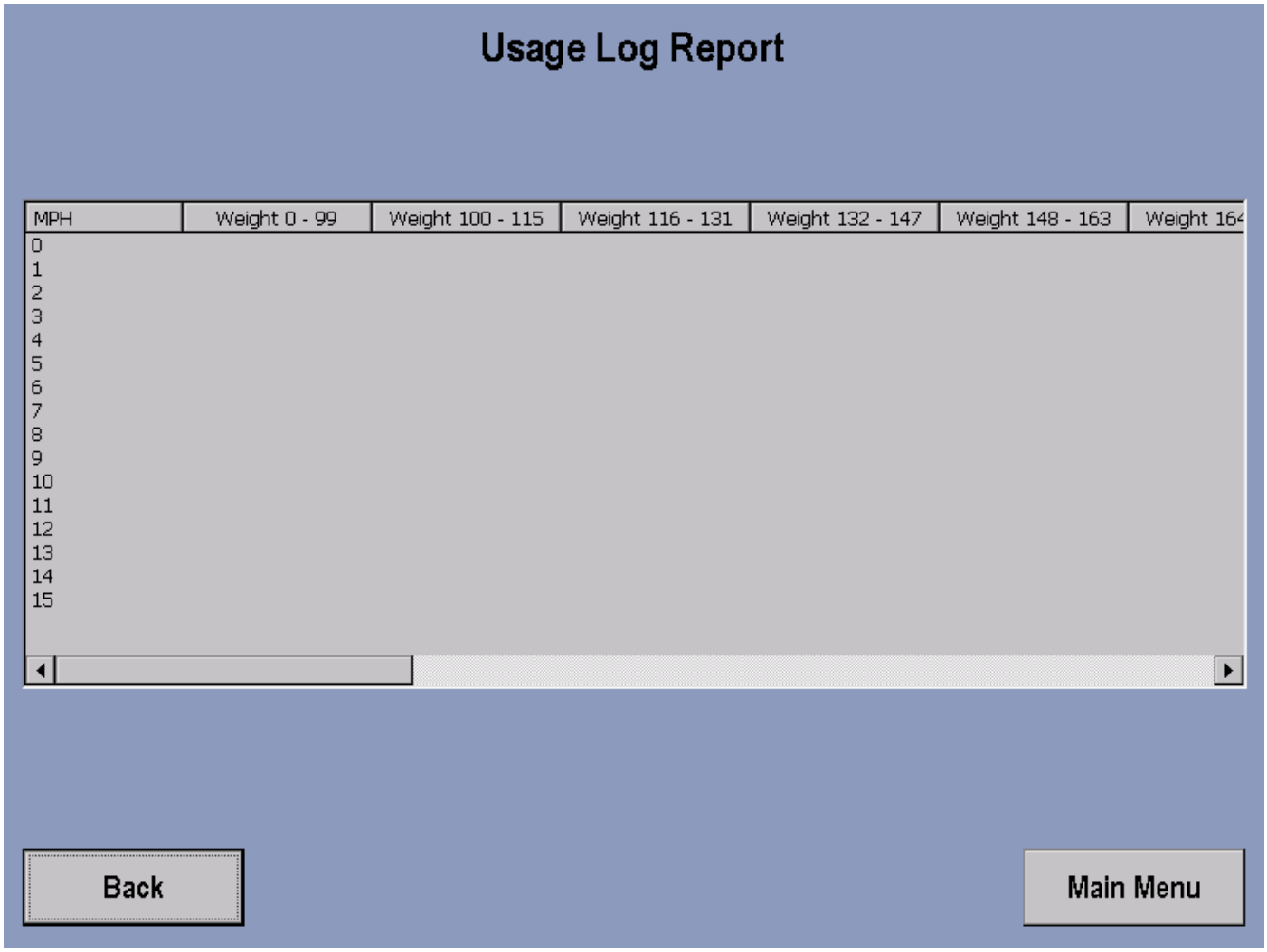


This screen allows the user to view detailed information in relation to RPMs used at different levels.

To return to the previous page press the Back key. Press the Main Menu key to return back to the System Options – Main Menu Screen.

## CONFIGURATION - CONFIGURATION MENU

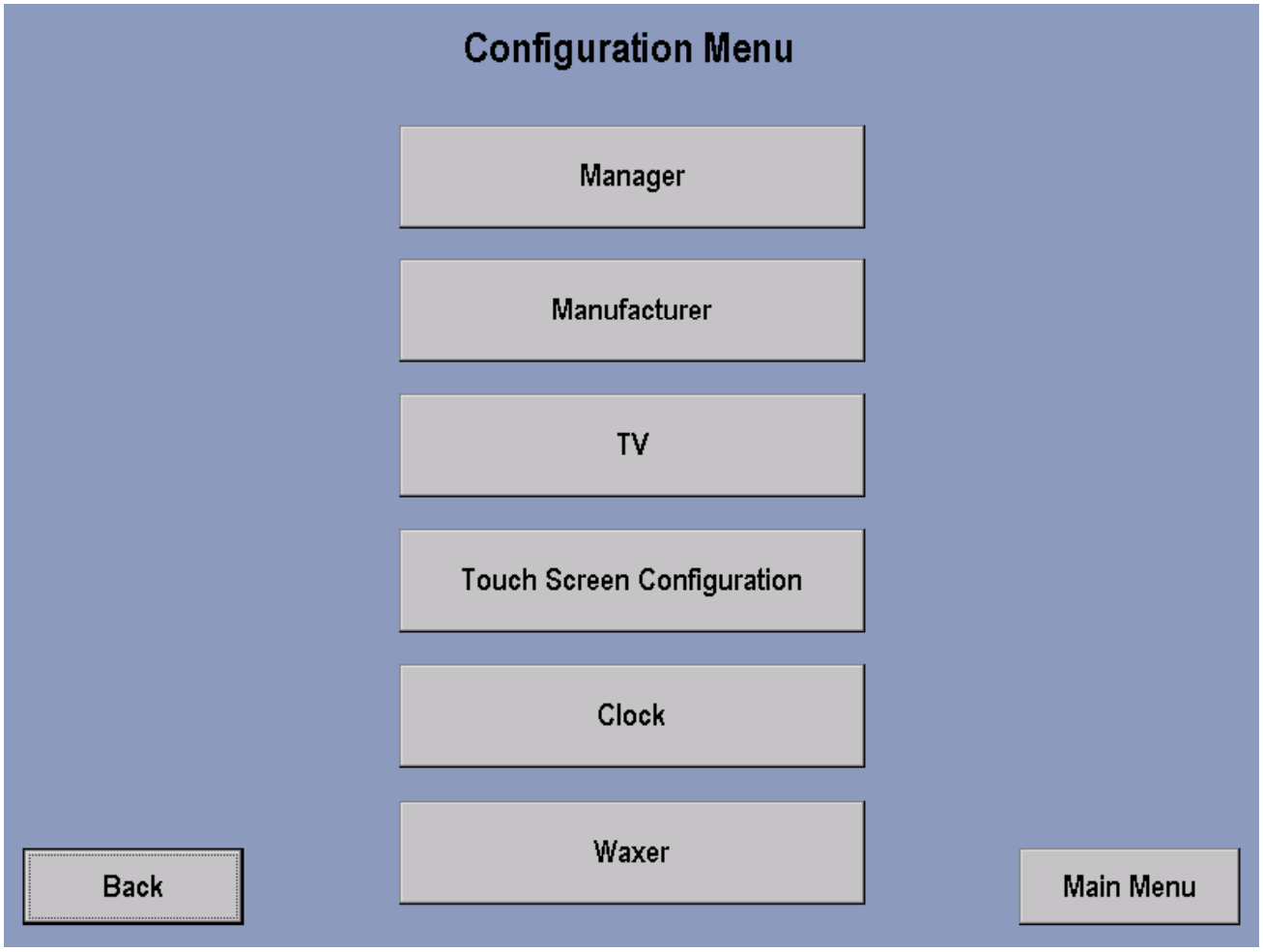


To access the CONFIGURATION MENU go back to the Systems Option Man Menu and press the CONFIGURATION key. This screen allows the user to access as listed above by pressing the appropriate key.

To return to the previous page press the Back key. Press the Main Menu key to return back to the System Options – Main Menu Screen.

## CONFIGURATION - MANAGER

### Manager's Configuration 1, 2, & 3

There are three Manager screens. Two Manager's Configuration 1 screens and a Manager's Configuration 2 screen, which all can be accessed for proper settings.

The first Manager's Configuration 1 screen displays is intended to display current settings such as: English or Metric, Maximum and Minimum Speed, Workout Duration Configuration, and Stand By Configuration.

The second Manager's Configuration 2 screen allows the manager to actually set the defaults for language, units (English or Metric), telemetry, pause time, maximum workout duration, wax reminder, smart stop, accel rate, maximum speed, minimum speed, and decel rate.

To make settings, simply select appropriate buttons and use the arrow keys to modify variable default values.

Select RESET to return all values to there original factory settings.

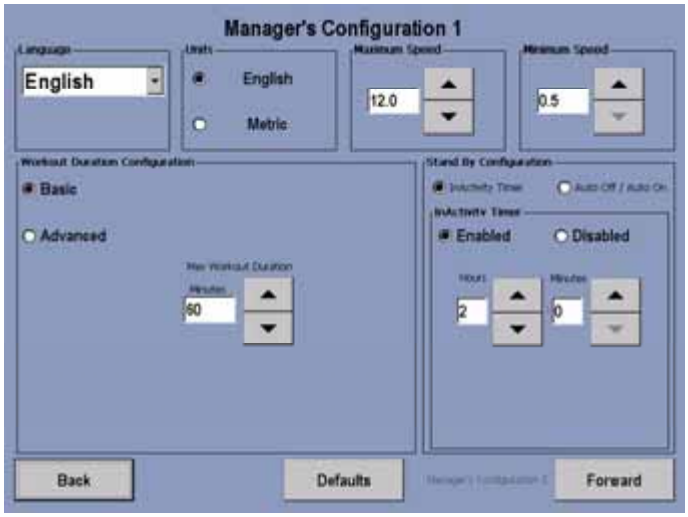


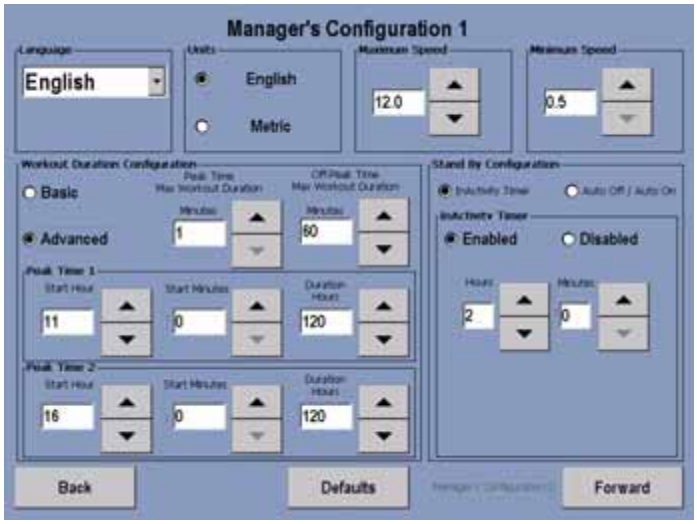


Manager's Configuration 2 allows the manager to activate or deactivate an operating system for maintenance purposes.

To return to the previous page press the Back key. Press the Main Menu key to return back to the System Options – Main Menu Screen.

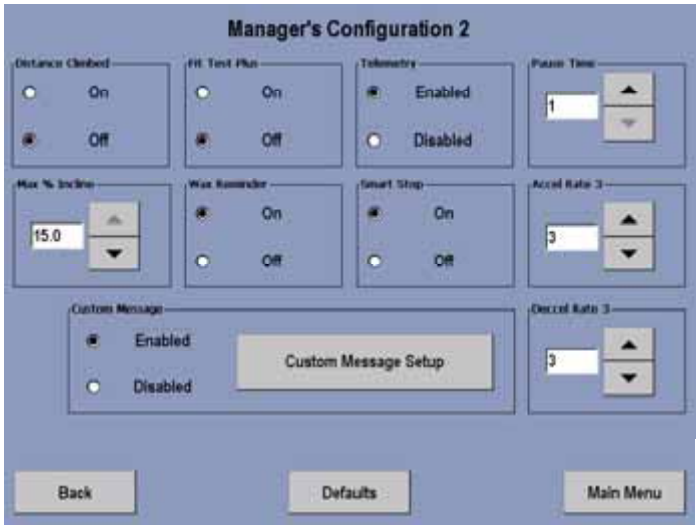

## CONFIGURATION - CUSTOM MESSAGE SETUP

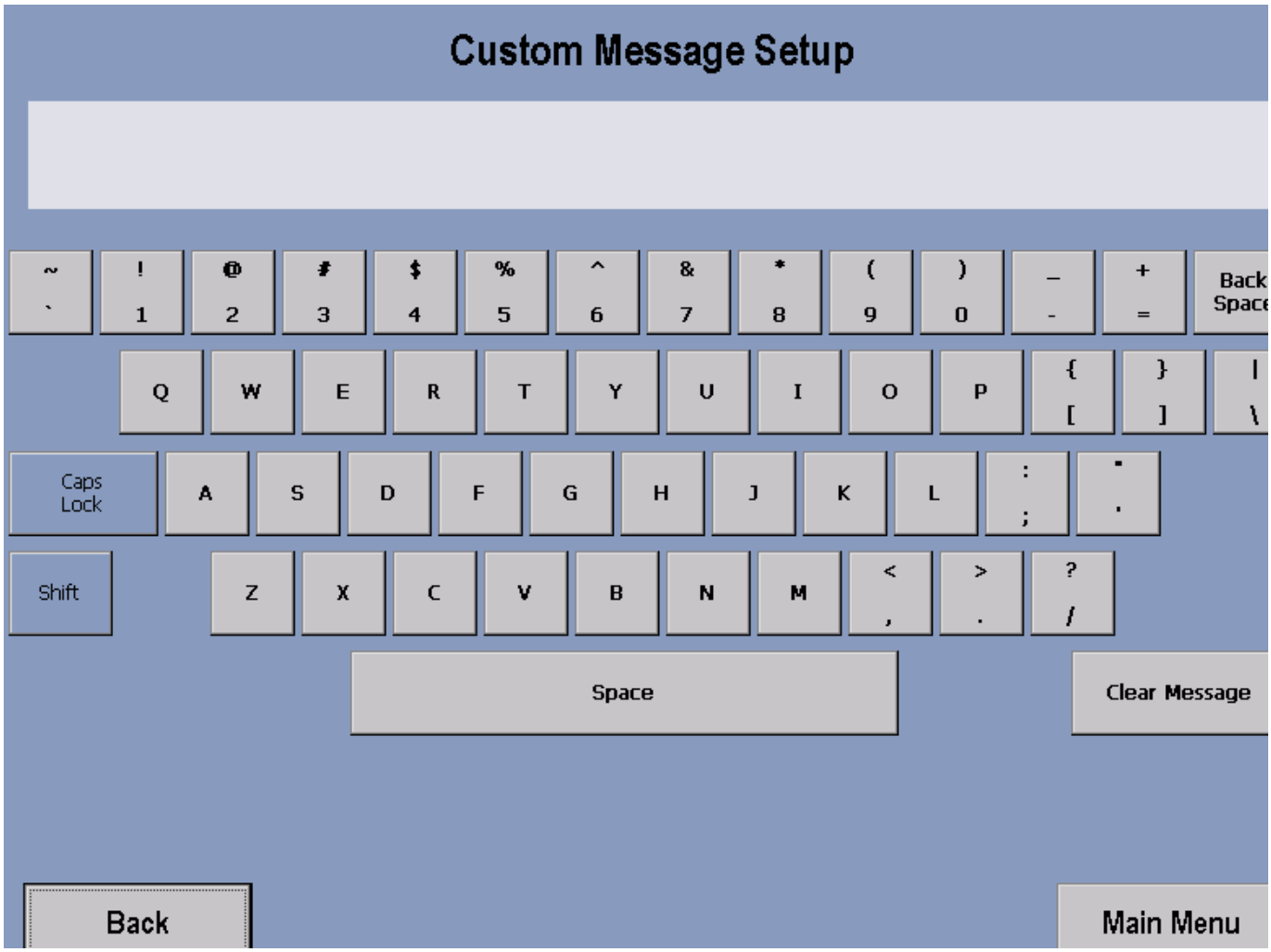


This configuration allows for a custom message to be displayed across the Welcome Screen. Creating/changing a Custom Message—after entering the Manager's Configuration, check to make sure that Custom Message is enabled, and then select Custom Message Setup. Upon entering the setup screen, a message can be entered using the on-screen keyboard. Use the Shift button to input special characters and capital letters. The message will scroll across the top of the screen as the message is being inputted, giving real time feedback. Accepting a Custom Message—To accept the Custom Message, simply select the Main Menu button.

Erasing a Custom Message—to erase a Custom Message, enter the Custom Message Setup screen. Then select Clear Message and then Main Menu.

To return to the previous page press the Back key. Press the Main Menu key to return back to the System Options – Main Menu Screen.

## CONFIGURATION - CONFIGURATION MENU

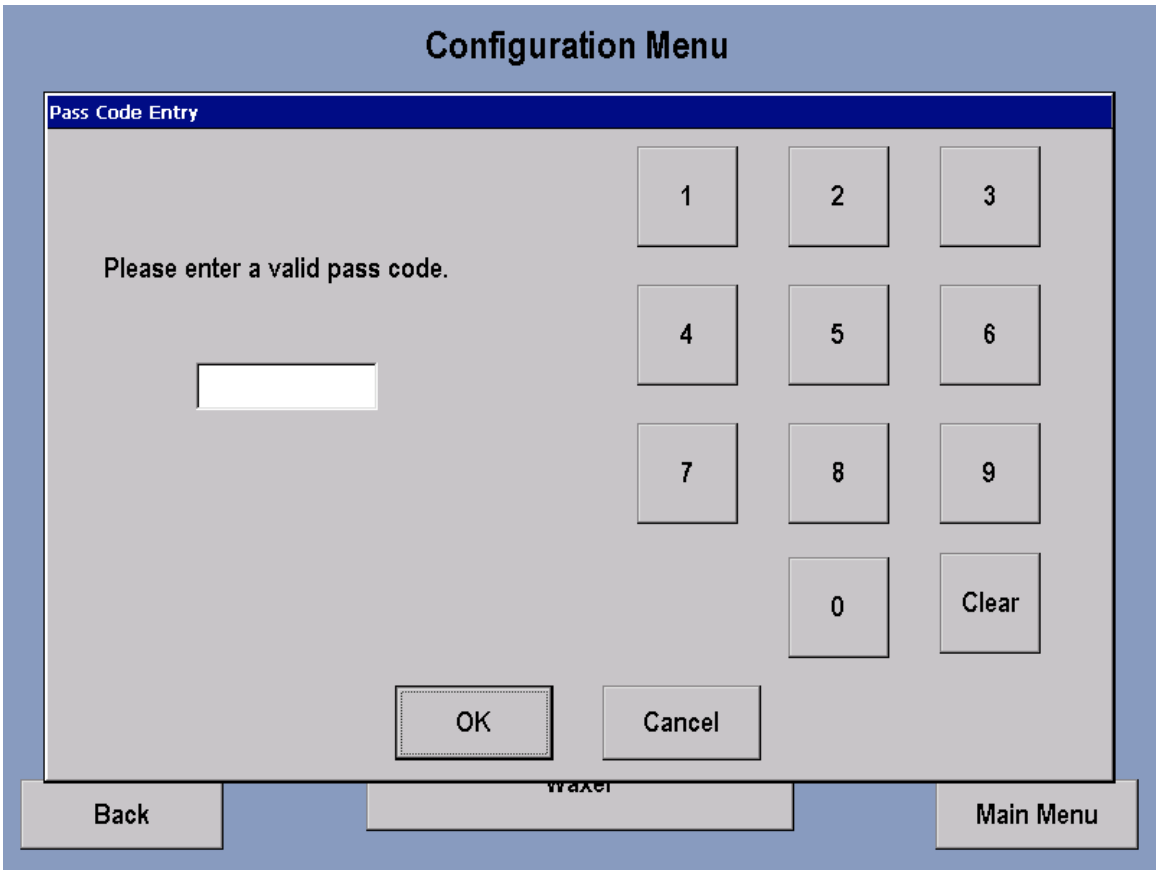


Access to this screen will only be available to Life Fitness certified technicians.

To return to the previous page press the Back key. Press the Main Menu key to return back to the System Options – Main Menu Screen.

## CONFIGURATION - BOOT UP CONFIGURATION

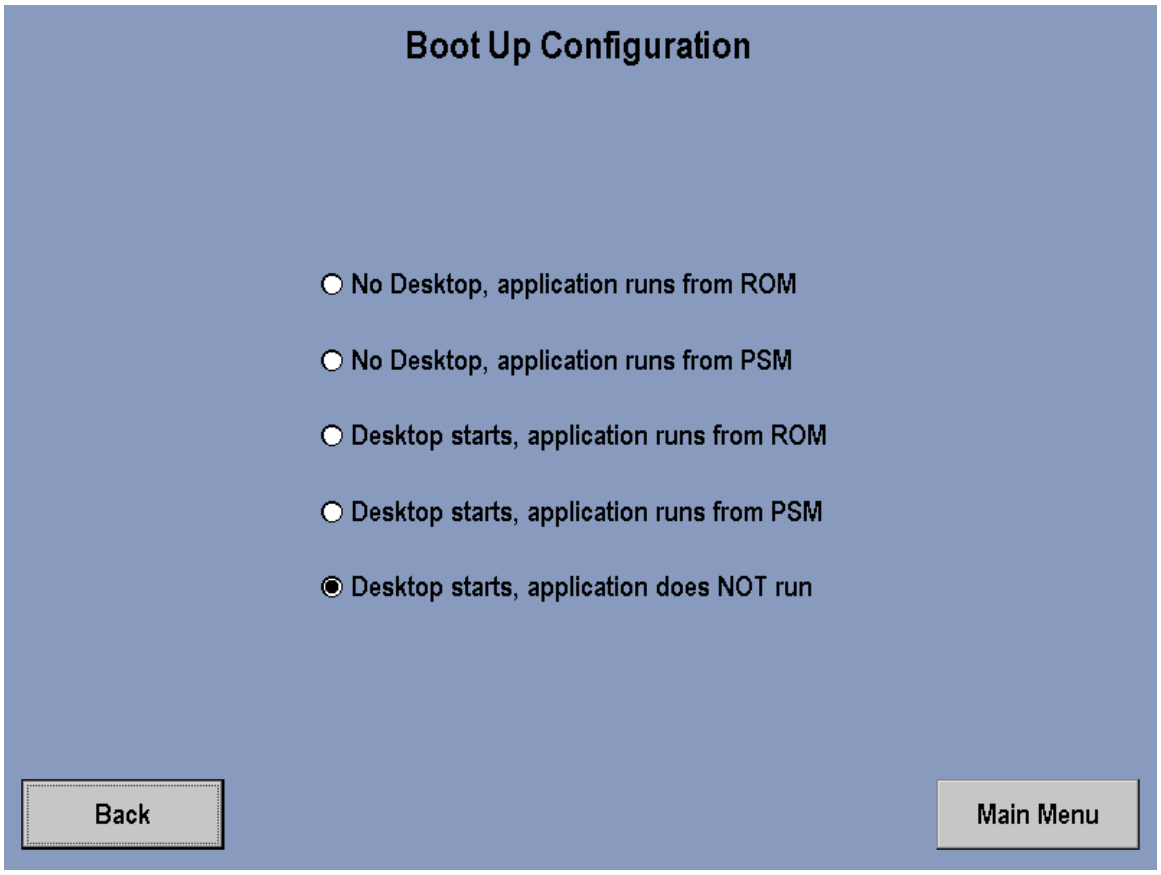

## CONFIGURATION - TV CONTROLS

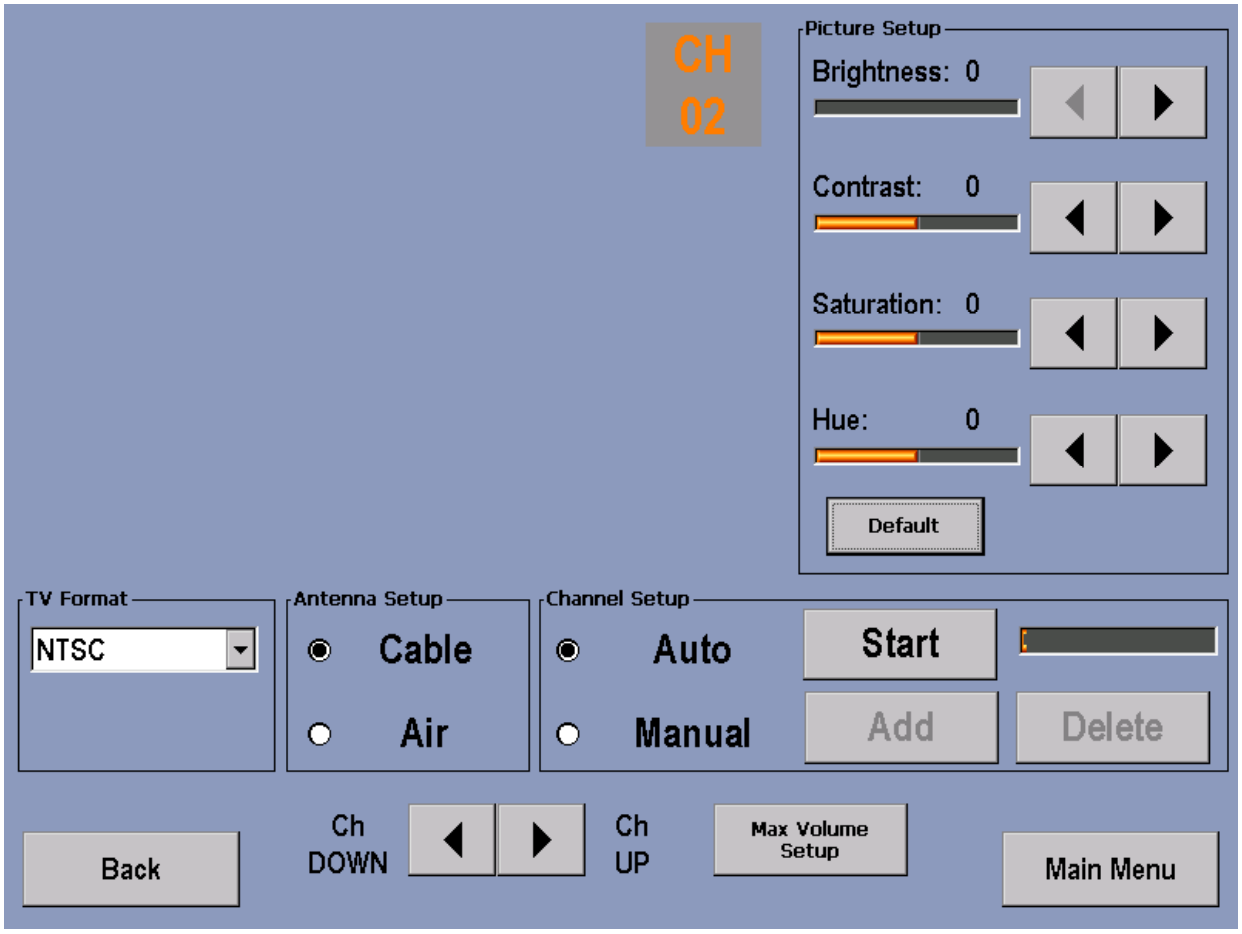


This screen brings up the TV screen and allows adjustment of brightness, contrast, saturation and hue. Also allows the choice of TV format, antenna setup and channel setup. To Set up channels: Select Auto in Channel Setup and then press Start.

To delete an unwanted channel: Select Manual in Channel Setup window, then press Manual, then use the channel controls on the Control Panel to choose the channel to be deleted, press Delete and then press Auto to return Channel Setup to Auto.

To restore a channel: Press the Manual key in Channel Setup, use the the channel controls to choose the channel to be restored, press the Add key and the press Auto to return Channel Setup to Auto.

To Adjust Picture Setup: Brightness, Contrast, Saturation and Hue can be adjusted by using the corresponding arrow buttons. To return to the unit default settings, press Default key. The default settings are: Brightness-180, Contrast-71, Saturation-64 and Hue-0.

Press the Max Volume Setup key to adjust volume.

To return to the previous page press the Back key. Press the Main Menu key to return back to the System Options – Main Menu Screen.

## CONFIGURATION - MAX VOLUME SETUP

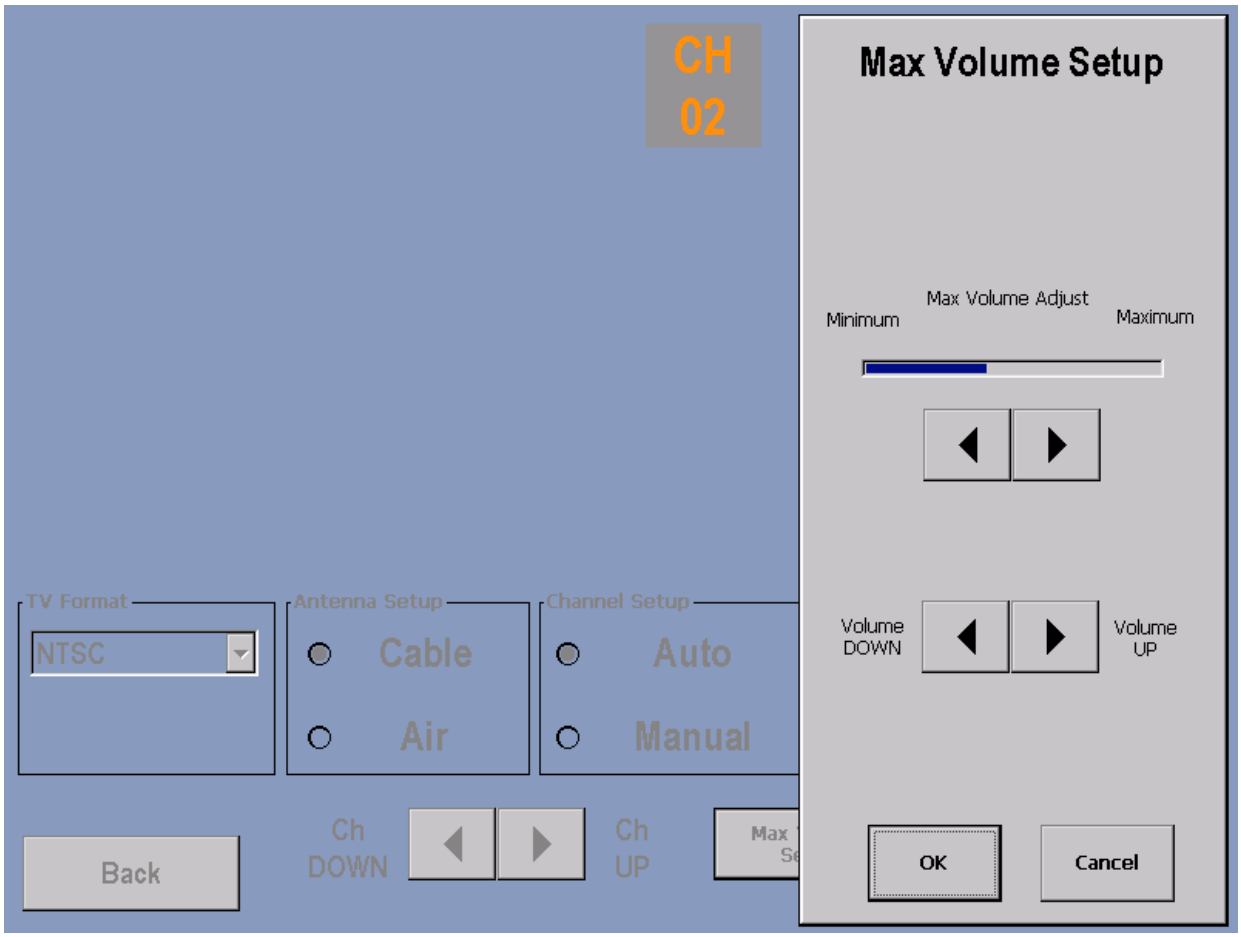


Entry to this screen allows the user to adjust Volume by using the Arrow keys.

Note: Headphones must be used for this function.

The upper set of arrows adjusts the volume capacity higher or lower, allowing clubs to compensate for average noise levels within the club. The maximum volume returns to this default after each workout.
The Volume Down, Volume Up arrows control the volume of the unit for the current usage. After each session ends, the unit resets to mid-range volume corresponding to the maximum volume setup.

To return to the previous page press the Back key. Press the Main Menu key to return back to the System Options – Main Menu Screen.

## CONFIGURATION - CONFIGURATION MENU

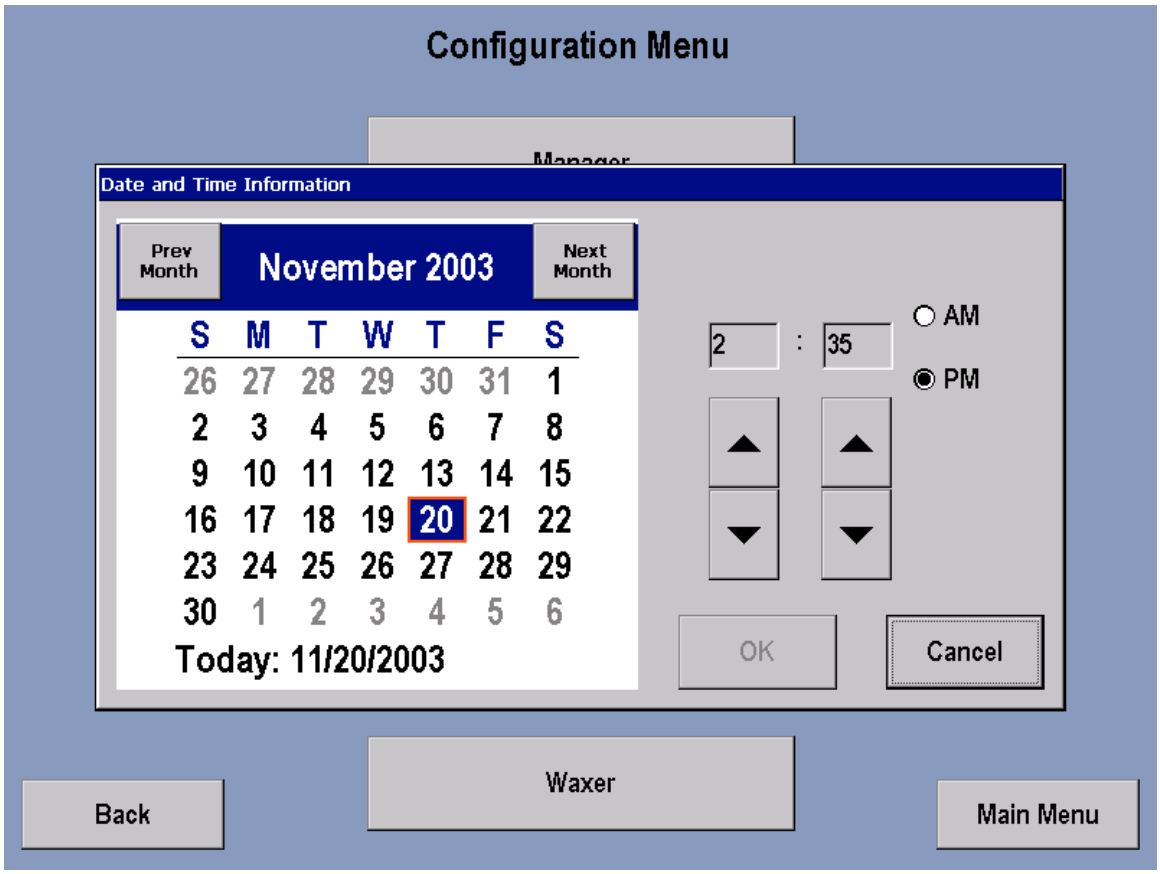


Use the up and down arrows keys to make appropriate settings.

To return to the previous page press the Back key. Press the Main Menu key to return back to the System Options – Main Menu Screen.

## CONFIGURATION - WAXER CONFIGURATION

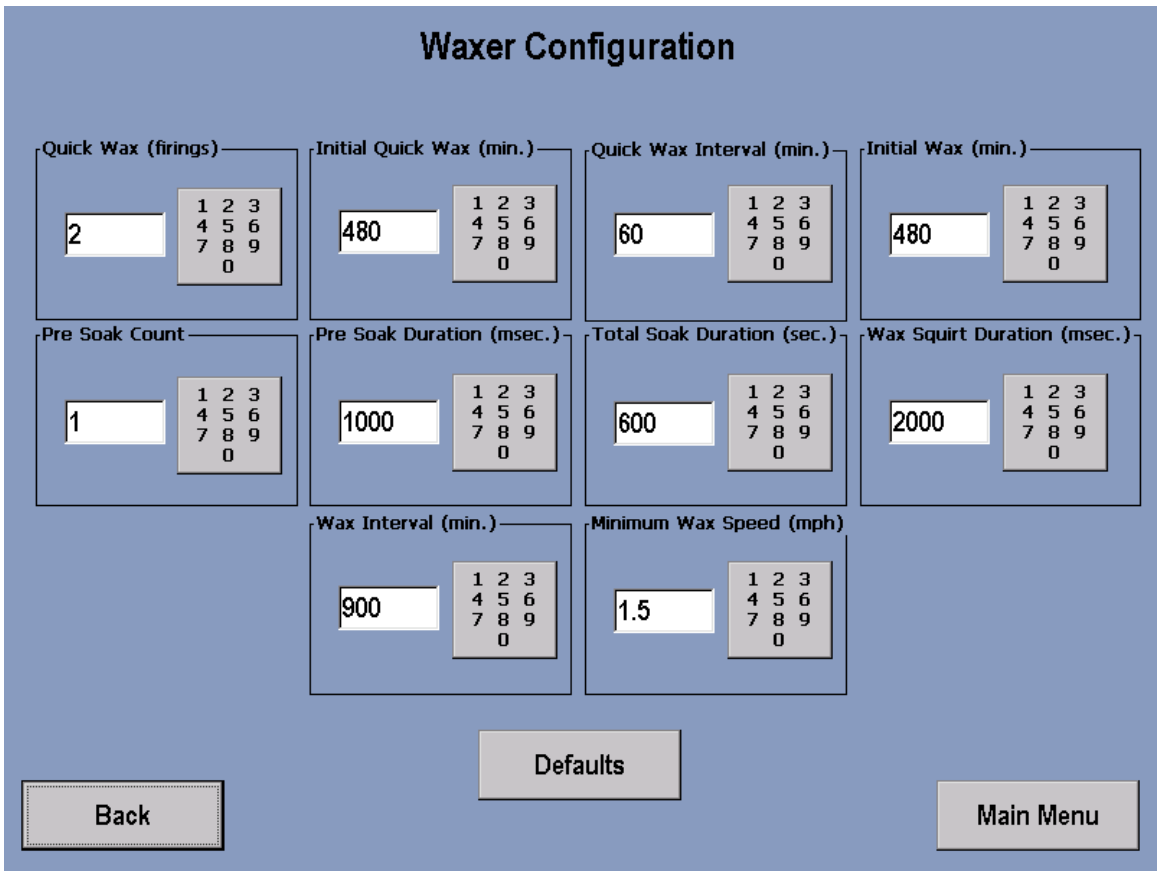


This screen menu allows the user to make wax configuration settings.

To return to the previous page press the Back key. Press the Main Menu key to return back to the System Options – Main Menu Screen.

## MAINTENANCE - MAINTENANCE

To access the Maintenance menu, you must go back to the System Options – Main Menu and select the Maintenance key.

To return to the previous page press the Back key. Press the Main Menu key to return back to the System Options – Main Menu Screen.

# SECTION IIA

# DIAGNOSTIC MODES FOR LED UNITS

**Page**

Display Consoles ..... 3
Initial Setting Of Real Time Clock ..... 5
Diagnostic Entry ..... 6
Maintenance Configuration-Quick Entry Reference ..... 7
Diagnostics: Sub-Categories ..... 8
Diagnostics: System Communication (Comm) Test ..... 9
Diagnostics: System Test Menu ..... 11
Diagnostics: System Test – Speed Automatic Mode ..... 12
Diagnostics: System Test – Speed Manual Mode ..... 13
Diagnostics: System Test – Controller Errors Mode ..... 14
Diagnostics: System Test – Incline Automatic Mode ..... 15
Diagnostics: System Test – Incline Manual Mode ..... 16
Diagnostics: System Test – Incline Error Mode ..... 17
Diagnostics: System Test – Waxer Automatic Mode ..... 18
Diagnostics: System Test – Waxer Manual Mode ..... 19
Diagnostics: System Test – Waxer Error Mode ..... 20
Diagnostics: System Test – Belt / Deck Mode ..... 21
Diagnostics: System Test – Life Pulse Mode ..... 22
Diagnostics: System Test – Telemetry Mode ..... 23
Diagnostics: System Test – Smart Stop Mode ..... 24
Diagnostics: System Test – Display Test Mode ..... 25
Diagnostics: System Test – Real Time Clock Mode ..... 26
Diagnostics: System Test – Frame Tag EEPROM Mode ..... 27
Diagnostics: System Test – Display Console EEPROM Test Mode ..... 28
Diagnostics: System Test – Lifecenter Test Mode ..... 29
Diagnostics: System Test – C-Safe Test Mode ..... 30
Diagnostics: Information Menu ..... 31
Diagnostics: Information – System Statistics Mode ..... 32
Diagnostics: Information – Software Version Mode ..... 33
Diagnostics: Information – Main Motor Info Mode ..... 34
Diagnostics: Information – Lift Motor Info Mode ..... 35
Diagnostics: Information – Wax Motor Info Mode ..... 36
Diagnostics: Information – Clock Info Mode ..... 37
Diagnostics: Information – System Error Mode ..... 38
Diagnostics: Information – Maintenance Info Mode ..... 39
Diagnostics: Maintenance Menu ..... 40
Diagnostics: Configuration Menu ..... 41
Diagnostics: Configuration – Manager Configuration Mode ..... 42
Diagnostics: Configuration – Manufacturer Configuration Mode ..... 44
Diagnostics: Configuration – Clock Configuration Mode ..... 45
Notes ..... 46

## Notes

# DISPLAY CONSOLES

Use the following to aid you in control and message locations:

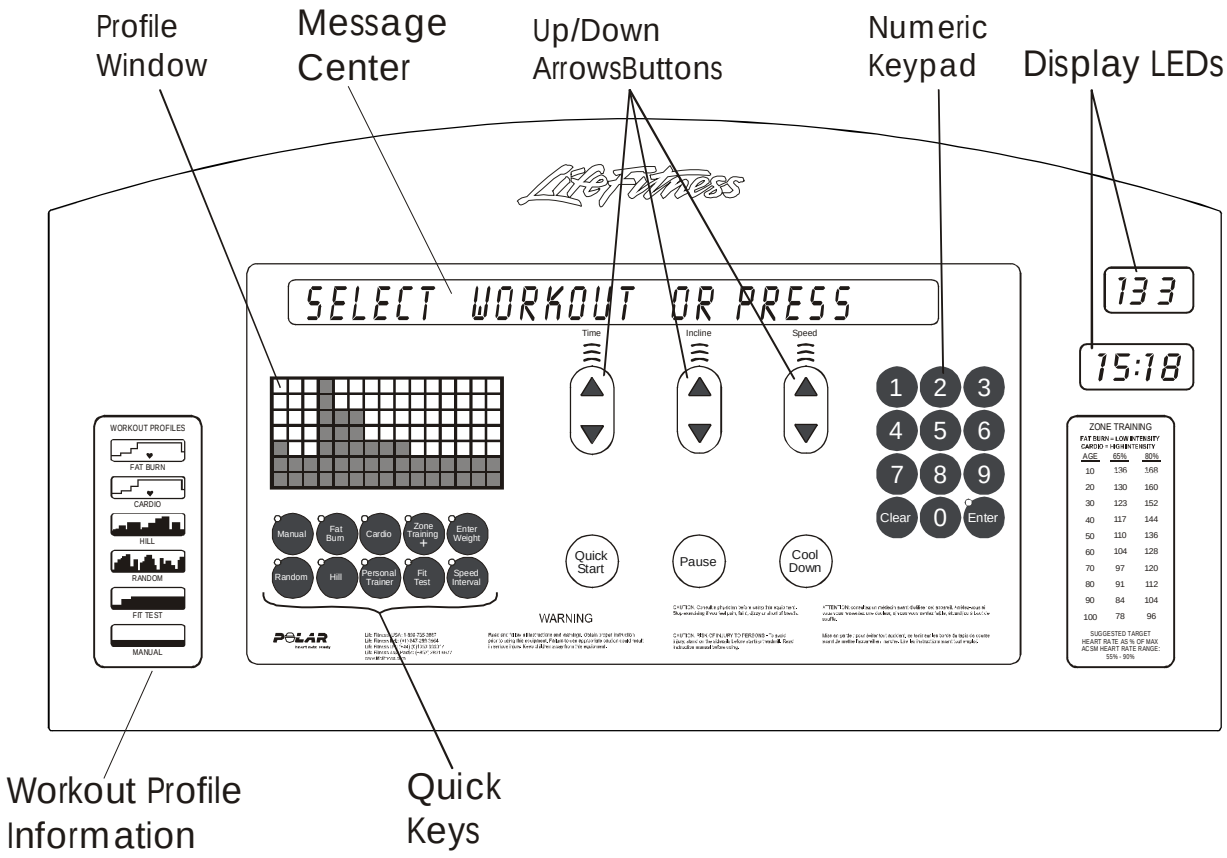

## DISPLAY CONSOLES - Continued

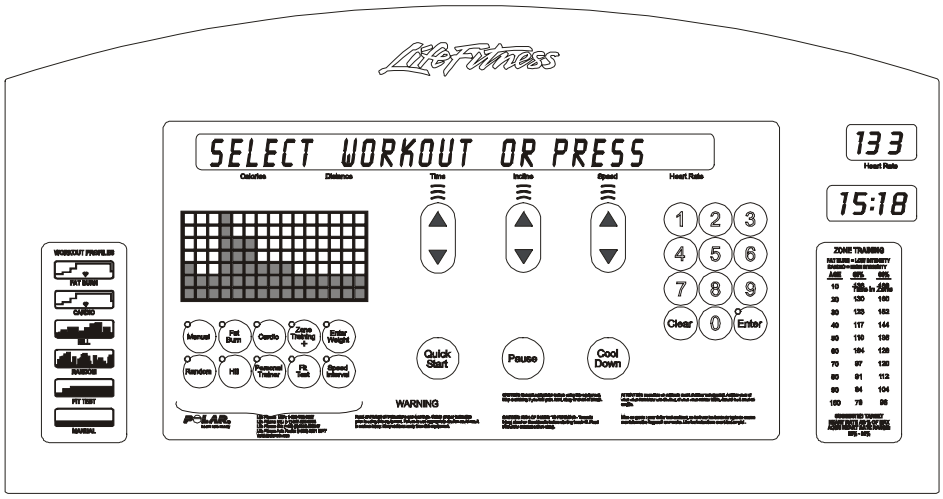


97Ti Treadmill

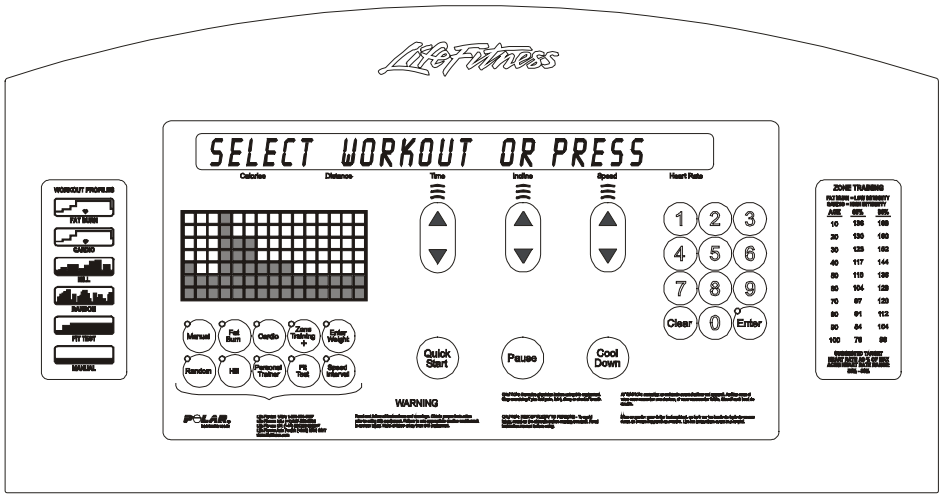


95Ti Treadmill

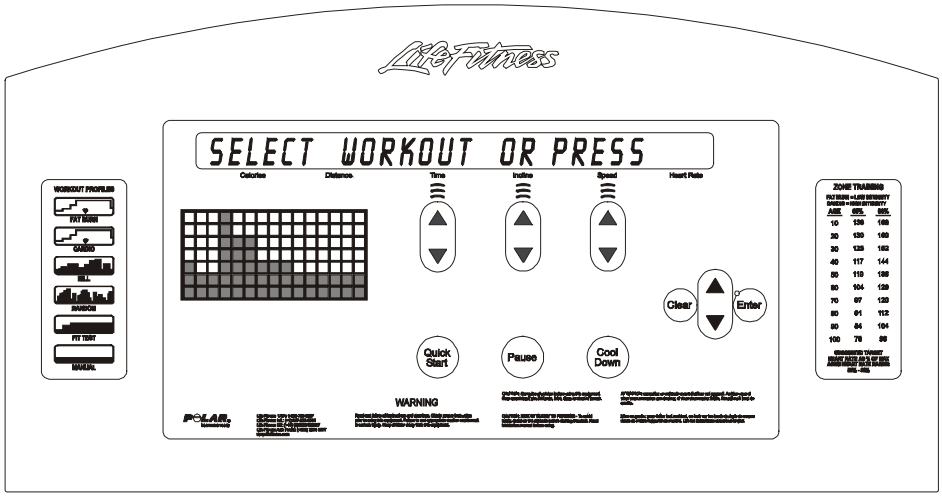


93T Treadmill

# INITIAL SETTING OF THE REAL TIME CLOCK

As part of the initial installation of the treadmill, the real time clock may be configured to the local time. Initially the real time clock is set to Greenwich meantime (GMT) which is the mean solar time for the meridian at Greenwich, England, used as a basis for calculating time throughout most of the world. Upon powering up the unit the following message will be displayed:

WOULD YOU LIKE TO CHANGE THE CLOCK FROM GMT TO LOCAL TIME

Calories Distance Time Incline Speed

IF YES PRESS ENTER

Calories Distance Time Incline Speed

IF NO PRESS CLEAR

Calories Distance Time Incline Speed

If the user wants to set the real time clock to the local time, the user must press the ‘ENTER’ key.
The user will be asked to set the display mode. The two display modes are 12-hour mode with AM/PM or 24 hour mode with no am/pm. displayed. The message will be:

CHOOSE CLOCK DISPLAY MODE BY USING ARROW KEYS

Calories Distance Time Incline Speed

By pressing any of the arrow keys, the user toggles between the two modes. Once the mode is set, press the ‘ENTER’ key to continue.
After the display mode is set the user will now be asked to set the local time. The following message will appear:

“CLOCK SET TO GMT”,
“USE ARROW KEYS TO ”
“CHANGE SYSTEM CLOCK”,
“TIME KEYS - HOURS”,
“INCLINE KEYS-MINUTES”,
“SPEED KEYS – SECONDS”

By pressing the specific arrow key, the user can set the real time clock to the local time.
After setting the local time, press the ‘CLEAR’ key to exit the real time clock setting mode.
The message “UPDATING CLOCK” will appear in the message center. The unit will then continue with the normal powering up sequence.

If the user does not want to set up the real time clock at this time, a ‘CLEAR’ key can be pressed to clear the initial message. The unit will continue with it’s normal powering up sequence. The unit will ask a total of 5 times upon powering up if the real time clock wants to be set. After the 5th time the message will no longer appear. Refer to clock configuration to change the clock settings.

# DIAGNOSTIC ENTRY

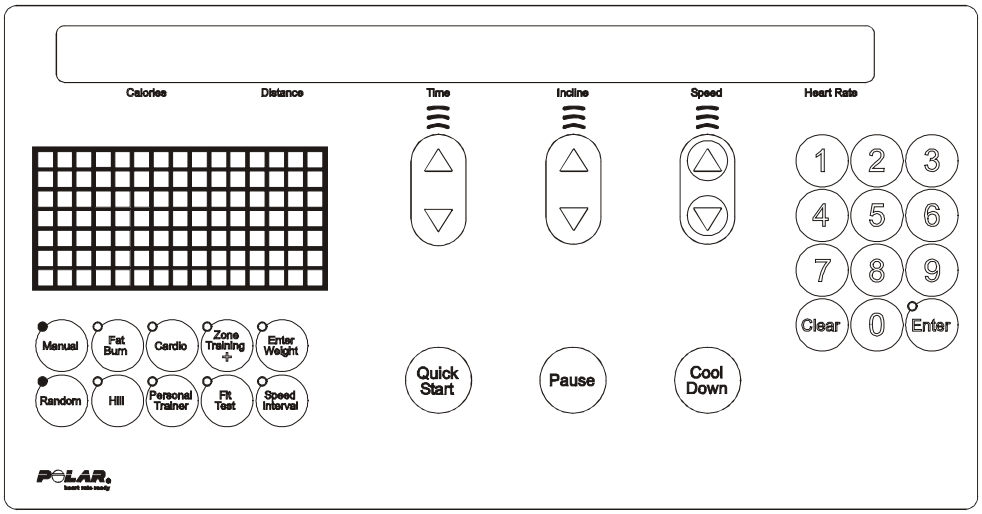


Diagnostics is entered by three methods:

1. Hold down the PAUSE Key until the SERVICE MENU appears, and press the STOP Button.
2. Hold down the PAUSE Key until the SERVICE MENU appears, and press CLEAR Key twice
3. Hold down the PAUSE Key when power is applied.

The unit will take approx. 3 to 4 seconds to enter Diagnostics.

On entry to this state, the message:

SERVICE MENU

Calories Distance Time Incline Speed

Followed by:

USE ARROW KEY TO SCROLL THROUGH LIST

Calories Distance Time Incline Speed

Using any of the arrow keys will allow you to scroll through the four main categories.

SYSTEM TEST

Calories Distance Time Incline Speed

INFORMATION

Calories Distance Time Incline Speed

MAINTENANCE

Calories Distance Time Incline Speed

CONFIGURATION

Calories Distance Time Incline Speed

# MAINTENANCE CONFIGURATION – QUICK ENTRY REFERENCE

Diagnostic selections can also be made by pressing a combination of program keys. The following is the list of diagnostic tests and their program key combination. All blank fields in the chart are considered “OFF” for that program key.

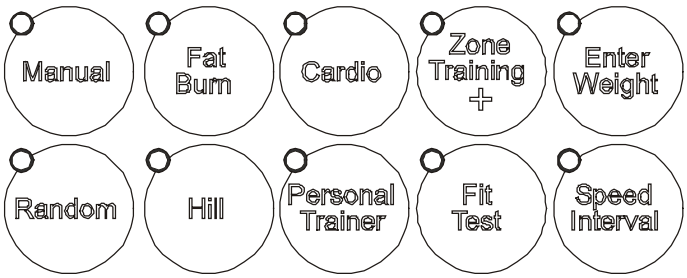


| DIAGNOSTIC TESTS | MANUAL | FAT BURN | CARDIO | RANDOM | HILL | CUSTOM/ PERSONAL TRAINER | FIT TEST | ZONE TRAINING | SPEED INTERVAL | ENTER WEIGHT |
|---|---|---|---|---|---|---|---|---|---|---|
| **SYSTEM TESTS** | | | | | | | | | | |
| BELT/DECK TEST | | | | | | ON | | | | |
| LIFEPULSE TEST | | ON | | | | | | | | |
| TELEMETRY TEST | | | ON | | | | | | | |
| SMART STOP TEST | | ON | | | ON | | | | | |
| DISPLAY TEST | ON | ON | ON | ON | ON | ON | ON | ON | ON | ON |
| COMM TEST | | | | ON | | | ON | | | |
| TAG EEPROM TEST | | | | | ON | | ON | | | |
| CONSOLE EEPROM TEST | | ON | | | | | ON | | | |
| LIFECENTER TEST | | ON | | | | ON | | | | |
| C-SAFE TEST | | | ON | | | ON | | | | |
| SPEED AUTO | | | | ON | | | | | | |
| SPEED MANUAL | ON | | | ON | | | | | | |
| SPEED ERROR | | | | ON | | ON | | | | |
| INCLINE AUTO | | | | | ON | | | | | |
| INCLINE MANUAL | ON | | | | ON | | | | | |
| INCLINE ERROR | | | | | ON | ON | | | | |
| WAXER AUTO | | | | | | | ON | | | |
| WAXER MANUAL | ON | | | | | | ON | | | |
| WAXER ERROR | | | | | | ON | ON | | | |
| **INFORMATION** | | | | | | | | | | |
| STATISTICS | | ON | ON | | | | | | | |
| SOFTWARE VERSION | | ON | | ON | | | | | | |
| CLOCK INFO | ON | | | | | ON | | | | |
| MAINTENANCE INFO | ON | | ON | | | | | | | |
| MAIN MOTOR INFO | | | ON | ON | | | | | | |
| INCLINE MOTOR INFO | | | ON | | ON | | | | | |
| WAX MOTOR INFO | | | ON | | | | ON | | | |
| SYSTEM ERROR INFO | ON | ON | | | | | | | | |
| **MAINTENANCE** | | | | | | | | | | |
| MAINTENANCE MENU | ON | | | | | | | | | |

# DIAGNOSTICS: SUB-CATEGORIES

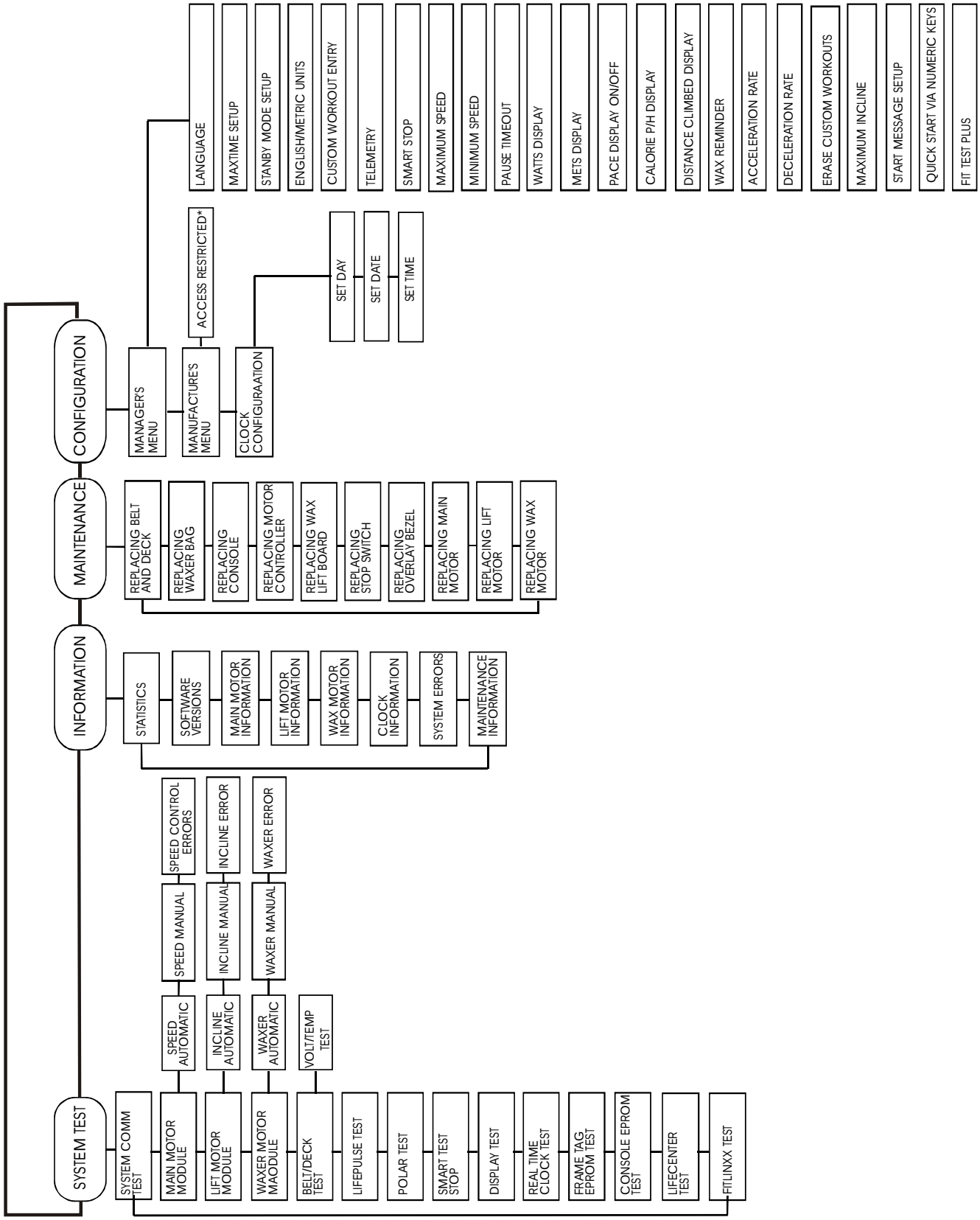

# DIAGNOSTICS: SYSTEM COMMUNICATION(COMM) TEST

Upon entry into this category, a SYSTEM COMMUNICATION (COMM) TEST will be performed automatically.

This test will attempt to communicate with all of the modules within the treadmill unit. If a module does not respond to the console processor an ERROR message will be displayed.

If all the modules communicate, the message is:

SYSTEM COMM OK

Calories Distance Time Incline Speed

If the motor controller module does not communicate, the initial message will display:

MOTOR CONTROLLER COMM BAD

Calories Distance Time Incline Speed

If the harness is disconnected the message is:

CHECK HARNESS BETWEEN LIFT AND CONTROLLER-P9/P3

Calories Distance Time Incline Speed

CHECK POWER TO THE MOTOR CONTROLLER

Calories Distance Time Incline Speed

If the motor controller has no power, the message is:

If the wax/lift board module does not communicate, the message is:

CHECK POWER TO WAX/LIFT BOARD

Calories Distance Time Incline Speed

If both the motor controller module and the wax/lift board module do not communicate, the message is:

BOTH LIFT AND CONTROLLER COMM BAD

Calories Distance Time Incline Speed

If the wax/lift and motor controller has no power, the message is:

CHECK POWER ON LIFT AND CONTROLLER

Calories Distance Time Incline Speed

If the main harness from the console to the wax/lift board is disconnected, the message is:

CHECK HARNESS BETWEEN CONSOLE AND LIFT - P1/P1

Calories Distance Time Incline Speed

# DIAGNOSTICS: SYSTEM COMMUNICATION(COMM) TEST

If both the motor controller module and the wax/lift board module do communicate, but the console cannot perform a loop-back test, the message is:

| SYSTEM | CONFIGURED | TWO | WIRE |
|---|---|---|---|
| Calories | Distance | Time | Incline | Speed |

If SYSTEM COMM OK is displayed it will advance to the **system test** category.

Press the ‘CLEAR’ key to return to the MAIN DIAGNOSTIC CATEGORIES.
Press the ‘ENTER’ key to advance to the SYSTEM TEST SUB-CATEGORIES.

# DIAGNOSTICS: SYSTEM TEST MENU

Upon entry the, the message is:

"USE ARROW KEYS TO SCROLL THROUGH THE LIST"

Using any of the arrow keys will allow you to scroll through the thirteen system tests.

SYSTEM TEST
MAIN MOTOR TEST
LIFT MOTOR TEST
WAXER MOTOR TEST
BELT/DECK TEST
LIFEPULSE TEST
TELEMETRY TEST
SMART STOP TEST
DISPLAY TEST
REAL TIME CLOCK TEST
FRAME TAG EEPROM TEST
CONSOLE EEPROM TEST
LIFECENTER TEST
C-SAFE TEST

Press the 'ENTER' key to access the sub-category.

# DIAGNOSTICS: SYSTEM TEST – SPEED AUTOMATIC MODE

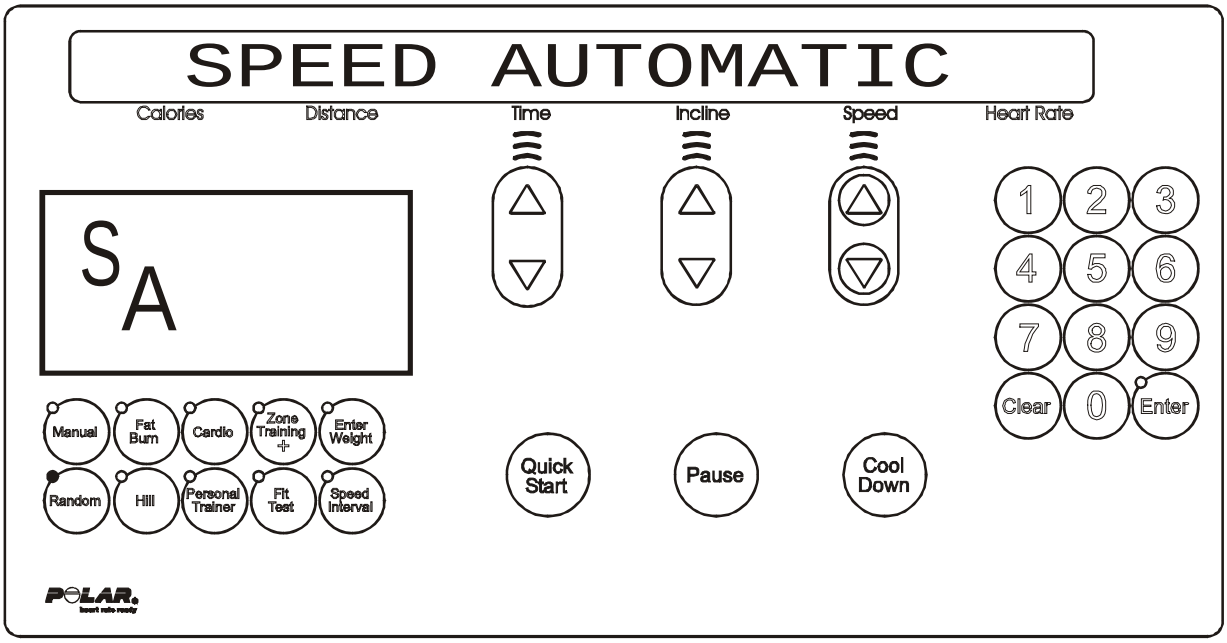


Upon entry into this test the letters SA (speed automatic) will be in the profile window. This test allows the user to test the main drive motor and controller controlling the target speed. The user can select a target speed by using the speed arrow keys. The actual speed as calculated by the speed feedback sensor is shown in the actual portion of the message center.

The incline system can be activated in this test as well. However, the display will only show the target incline for two seconds while the incline keys are being pressed. It will then return to showing the speed information.

Press the ‘CLEAR’ key to exit the Speed Automatic test and return to the System Test Menu.
Press the ‘ENTER’ key to advance to the Speed Manual test.

# DIAGNOSTICS: SYSTEM TEST – SPEED MANUAL MODE

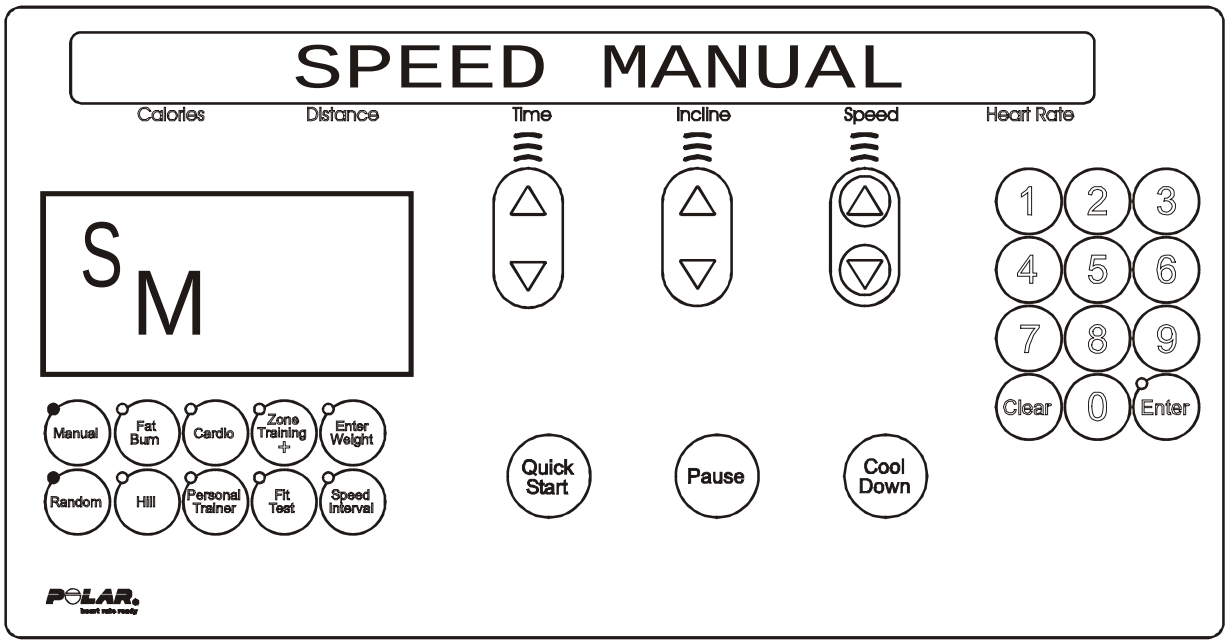


Upon entry into this test the letters SM (Speed Manual) will be in the profile window. This test allows the user to test the main drive motor and controller controlling the motor rpm. The user can select a target motor rpm by using the speed arrow keys. The actual motor rpm as calculated by the speed feedback sensor is shown in the actual portion of the message center.

The incline system can be activated in this test as well. However, the display will only show the target incline for two seconds while the incline keys are being pressed. It will then return to showing the speed information.

Press the ‘CLEAR’ key to exit the Speed Manual test and return to the Speed Automatic test.
Press the ‘ENTER’ key to advance to the Controller Errors test.

# DIAGNOSTICS: SYSTEM TEST – CONTROLLER ERRORS MODE

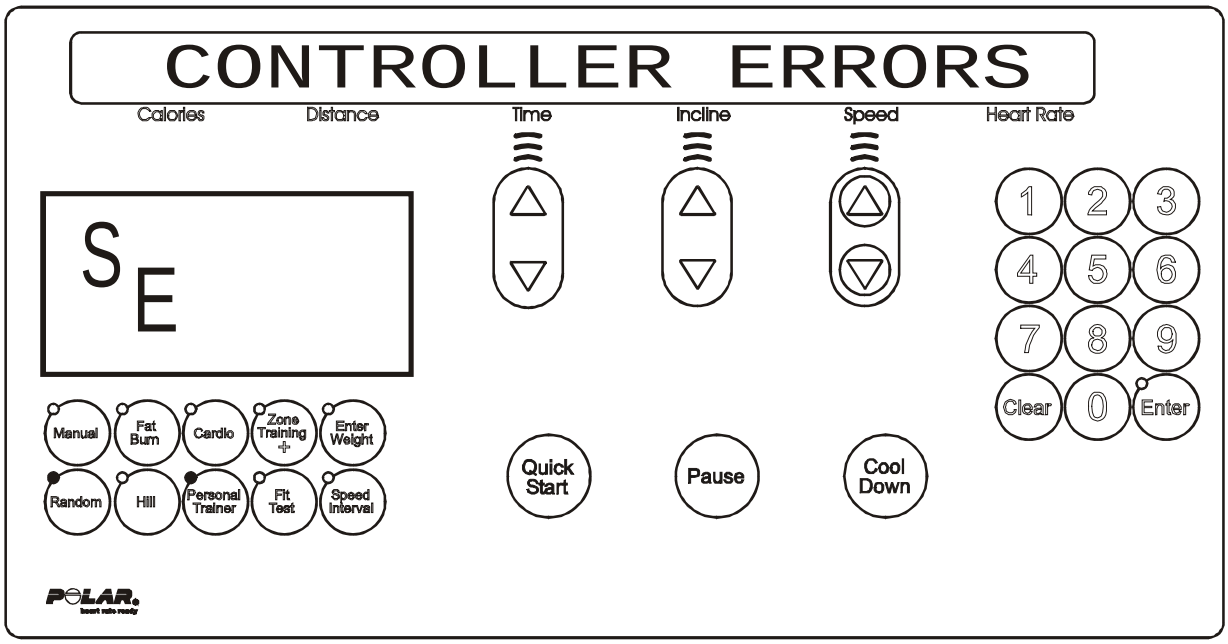


Upon entry into this test the letters SE (speed errors) will be in the profile window. This test allows seeing the current motor controller error conditions that are being displayed on the motor controller display. The following is a list of the current motor error conditions. If an error is displayed, refer to the troubleshooting section for corrective action.

## CURRENT MOTOR ERROR CONDITIONS

POWER UP RESET ERROR
STATIC CURRENT TRIP
MAX TEMPERATURE TRIP
MAXIMUM VOLTAGE TRIP
DYNAMIC CURRENT TRIP
FAULT LINE 1 ERROR
SCI ERROR
SPEED SENSOR ERROR

Press the ‘CLEAR’ key to exit the Speed Controller Errors test and return to the Speed Manual test.

# DIAGNOSTICS: SYSTEM TEST – INCLINE AUTOMATIC MODE

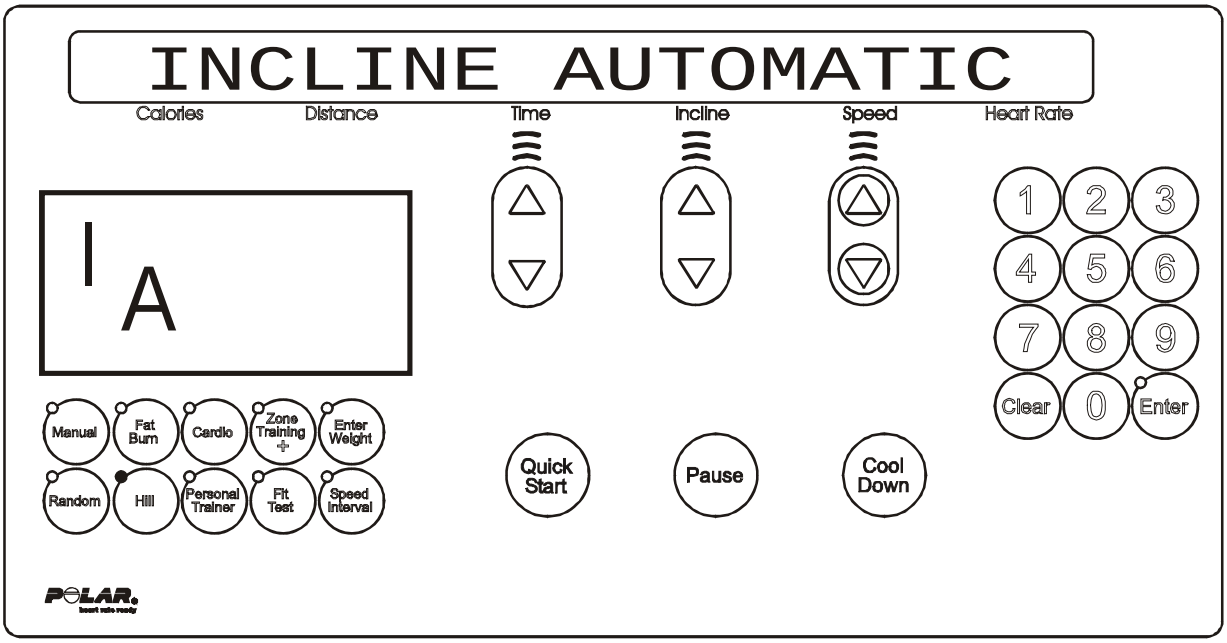


Upon entry into this test the letters IA (incline automatic) will appear in the profile window. This test allows the user to test the lift motor and switches controlling the target incline. The user can select a target incline by using the incline arrow keys. The actual incline as calculated by the time count, is shown in the incline portion of the message center.

For non-decline units: The state of the level switch will be displayed in the profile window. A zero “0” displayed in the profile window shows the level switch in the closed position. As the unit is inclined the zero “0” displayed should disappear to indicate that the level switch is functioning.

For decline units: The state of the level switch will be displayed in the profile window. A zero “0” displayed in the profile window shows the level switch in the closed position. As the unit is inclined the zero “0” displayed should disappear to indicate that the level switch is functioning.

The speed system can be activated in this test as well. However, the display will only show the target speed for two seconds while the speed keys are being pressed. It will then return to showing the incline information.

Press the ‘CLEAR’ key to exit the Incline Automatic test and return to the System Test Menu.
Press the ‘ENTER’ key to advance to the Incline Manual test.

# DIAGNOSTICS: SYSTEM TEST – INCLINE MANUAL MODE

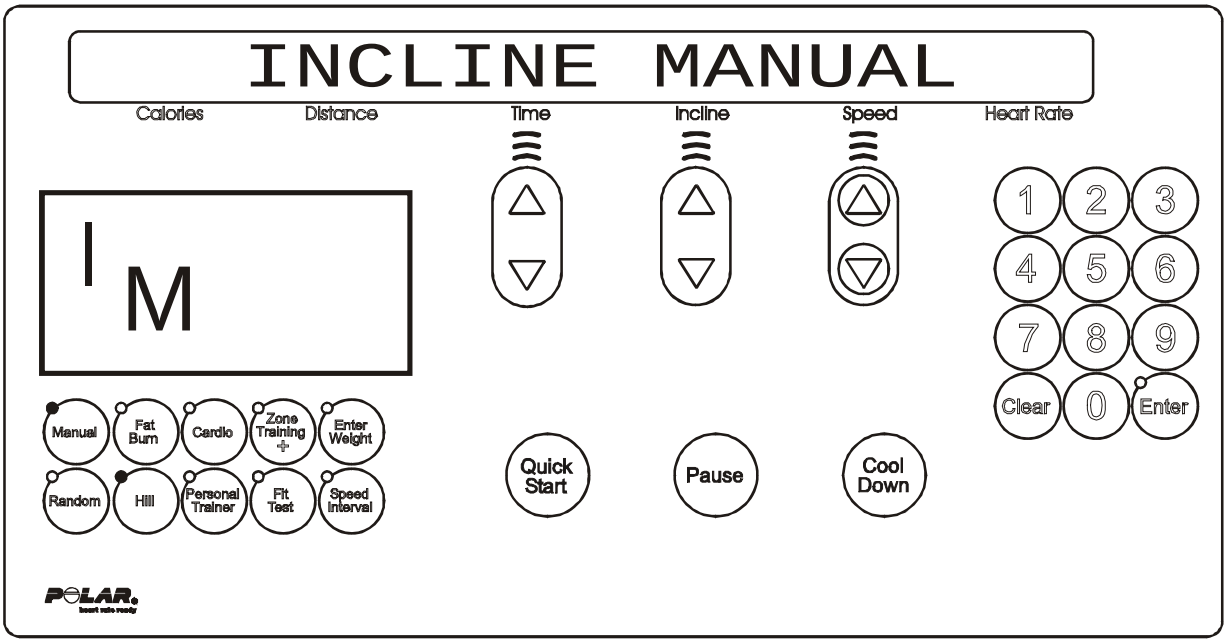


Upon entry into this test the letters IM (incline manual) will be in the profile window. This test allows the user to bypass the electromechanical switches that normally control the target incline. The user moves incline by pressing the incline arrow keys. The actual incline is calculated by the time count is shown in the actual portion of the message center. The state of the level and negative incline switches will be displayed in the profile window.

For non-decline units: The state of the level switch will be displayed in the profile window. A zero “0” displayed in the profile window shows the level switch in the closed position. As the unit is inclined the zero “0” displayed should disappear to indicate that the level switch is functioning.

For decline units: The state of the level and negative incline switches will be displayed in the profile window. A zero “0” displayed in the profile window shows the level switch in the closed position. As the unit is declined the zero “0” displayed should disappear and a “–4” should appear in the profile window. This verifies that the negative switch is functioning (the “–4” will only appear in incline manual mode).

The speed system can be activated in this test as well. However, the display will only show the target speed for two seconds while the speed keys are being pressed. It will then return to show the incline information.

Press the ‘CLEAR’ key to exit the Incline Manual test and return to the Incline Automatic test.
Press the ‘ENTER’ key to advance to the Incline Errors test.

# DIAGNOSTICS: SYSTEM TEST – INCLINE ERROR MODE

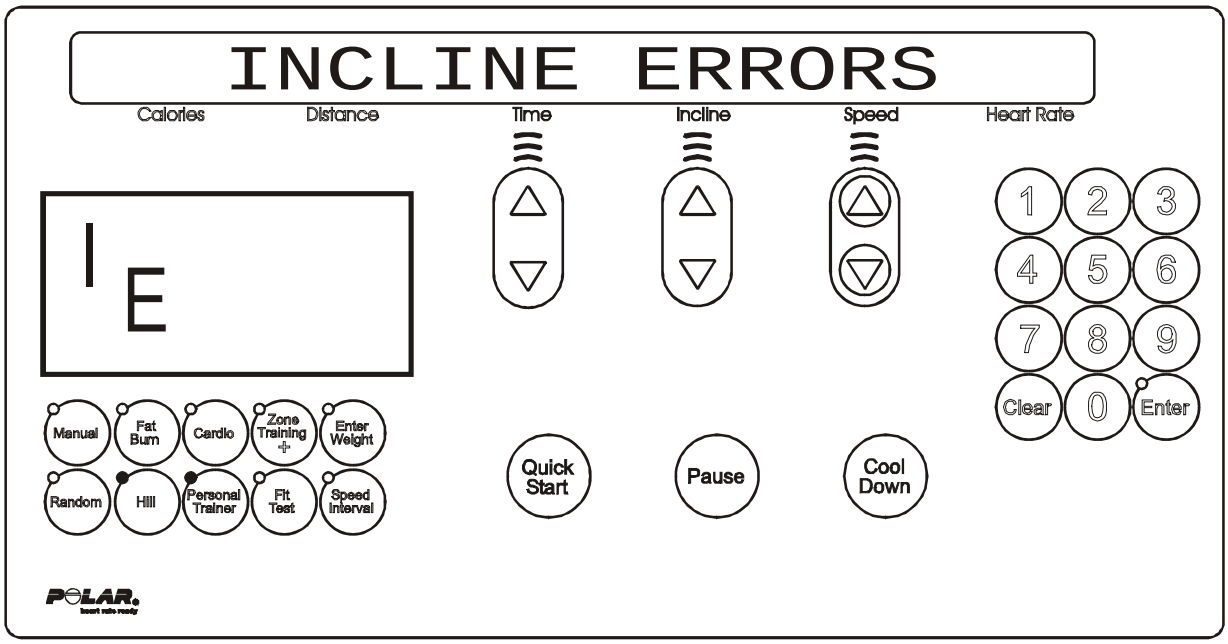


Upon entry into this test the letters IE (incline errors) will be in the profile window. This test allows seeing the current lift motor error conditions. The following is a list of the current lift motor error conditions. If an error is displayed, refer to the troubleshooting section for corrective action.

**CURRENT LIFT MOTOR ERROR CONDITIONS**

INCLINE TIMEOUT ERROR
HOME SWITCH ERROR
NEGATIVE SWITCH ERROR
NO AC POWER ERROR

Press the ‘CLEAR’ key to exit the Incline Errors test and return to the Incline Manual test.

# DIAGNOSTICS: SYSTEM TEST – WAXER AUTOMATIC MODE

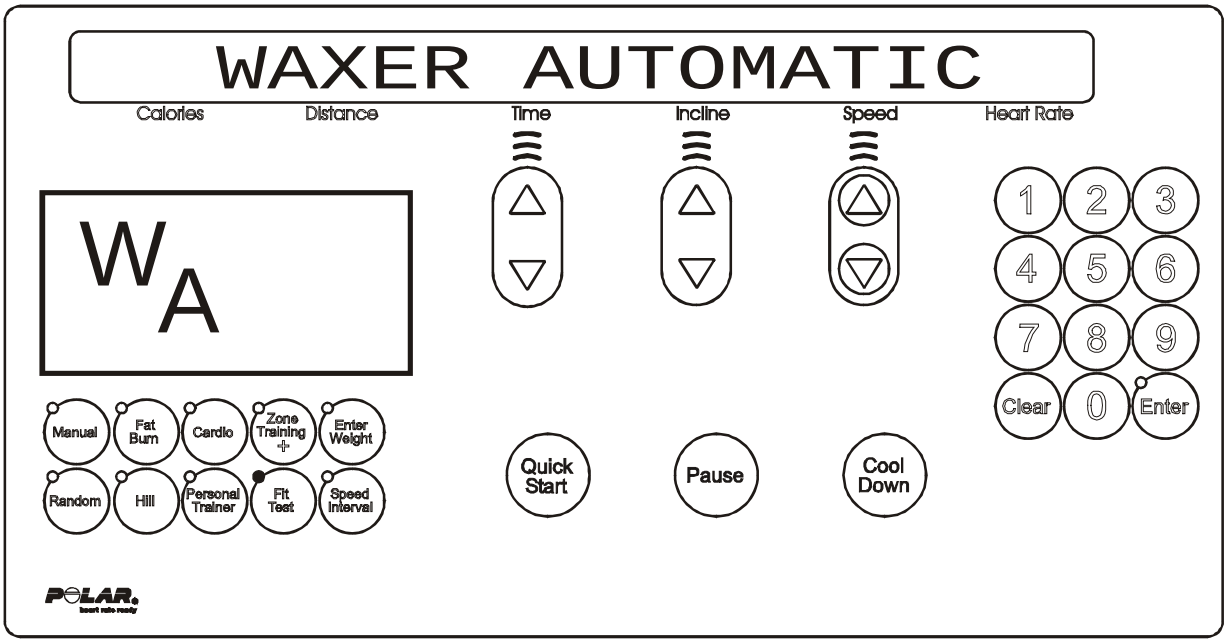


Upon entry into this test the letters WA (waxer automatic) will be in the profile window. This test allows the user to see information concerning the wax motor. The wax information will scroll automatically every 3 seconds.

If an error is displayed, refer to the troubleshooting section for corrective action.

| **ERROR CONDITION** | **DISPLAYED INFORMATION** |
|---|---|
| WAXER UNPLUGGED | WAXER FIRED – XXX<br>WAXER - XX/100 FULL<br>MANUAL WAX- XX TIMES<br>NEXT WAX - XX HOURS<br>INITIAL WAX- XX MINS<br>WAX INTERVAL XX MINS<br>MIN WAX SPEED- X.X |

The speed system and incline systems can be activated in this test as well. However, the display will only show the target speed or incline for two seconds while the speed/incline keys are being pressed. It will then return to showing the waxer information.

Press the ‘CLEAR’ key to exit the Waxer Automatic test and return to the System Test Menu.
Press the ‘ENTER’ key to advance to the Waxer Manual test.

# DIAGNOSTICS: SYSTEM TEST – WAXER MANUAL MODE

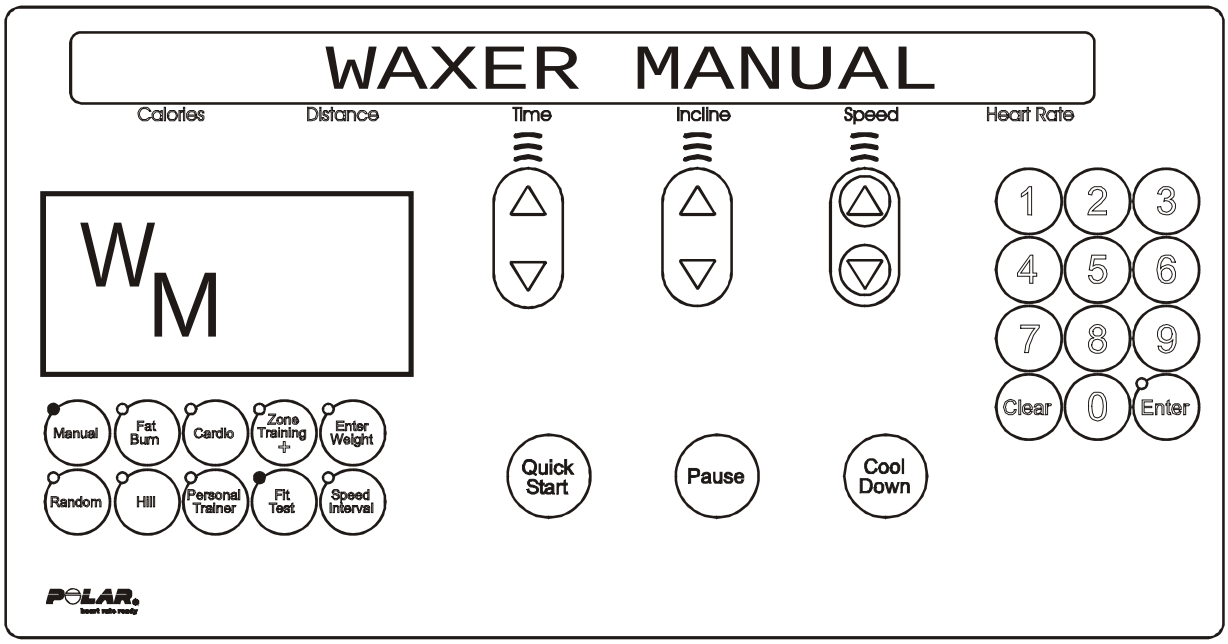


Upon entry into this test the letters WM (waxer manual) will be in the profile window. This test allows the user to manually fire the wax system. It allows the user to see information concerning the wax motor as well. The wax information will scroll automatically every 3 seconds.

If an error is displayed refer to the troubleshooting section for corrective action.

| **ERROR CONDITION** | **DISPLAYED INFORMATION** | **WAXER FIRE TEST** |
|---|---|---|
| WAXER UNPLUGGED | WAXER FIRED – XXX<br>WAXER - XX/100 FULL<br>MANUAL WAX- XX TIMES<br>NEXT WAX - XX HOURS<br>INITIAL WAX- XX MINS<br>WAX INTERVAL XX MINS<br>MIN WAX SPEED- X.X | TO FIRE WAXER PRESS THE QUICK START KEY |

The speed system and incline systems can be activated in this test as well. However, the display will only show the target speed or incline for two seconds while the speed/incline keys are being pressed. It will then return to showing the waxer information.

Press the ‘CLEAR’ key to exit the Waxer Manual test and return to the Waxer Automatic test.
Press the ‘ENTER’ key to advance to the Waxer Errors test.

# DIAGNOSTICS: SYSTEM TEST – WAXER ERROR MODE

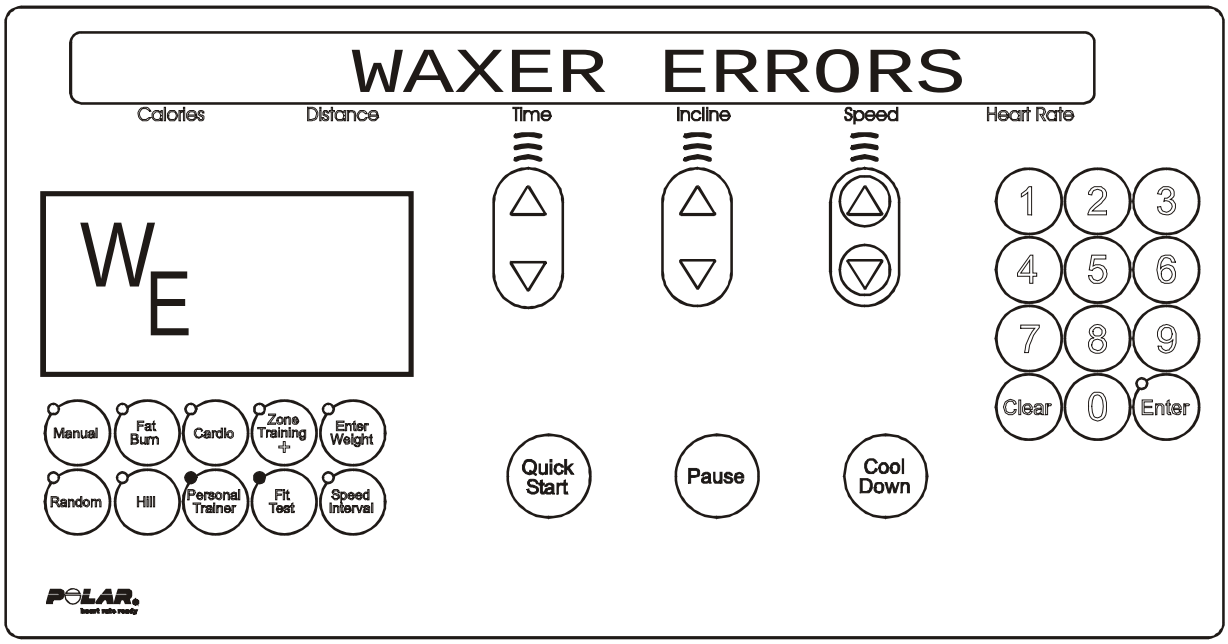


Upon entry into this test the letter WE (waxer errors) will be in the profile window. This test allows you to see the current wax motor error conditions.

The following is a list of the current waxer motor error conditions. If an error has occurred, refer to your troubleshooting section for corrective action.

## WAXER MOTOR ERROR CONDITIONS

WAXER UNPLUGGED
WAXER NO AC POWER

Press the ‘CLEAR’ key to exit the Waxer Errors test and return to the Waxer Manual test.

# DIAGNOSTICS: SYSTEM TEST – BELT / DECK MODE

This test allows the user to test the belt and deck condition. This test acts as a wattage meter. It will give the user the percentage of power, wattage, bus voltage, and temperature readings.

The following messages will scroll:

The initial information displayed will be:

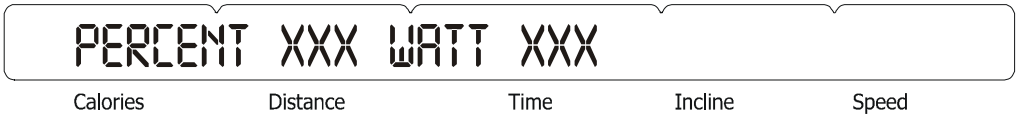


Where **XXX** will indicate real values.
PERCENT is the percentage of available power. It will range from 0 to 100%.
WATT is the wattage measured by the motor controller to move the belt ranging from 340 to 1200 watts.

By pressing the '**COOL-DOWN**' key, the display will toggle to the information displayed below.

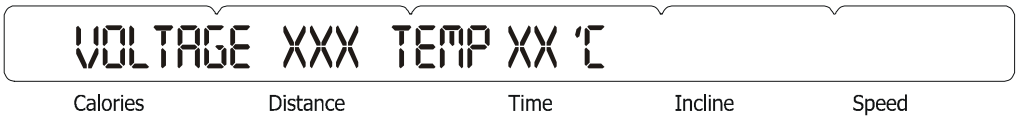


Where **XXX** will indicate real values.
VOLTAGE is the bus voltage of the motor controller. It is not the input line voltage.
TEMP is the temperature measure of the motor controller heat sink in Celsius.

The display will lock on the current information if the 'PAUSE' key is pressed.

The speed system and incline systems can be activated in this test. However, the display will only show the target speed or incline for two seconds while the speed/incline keys are being pressed. It will then return to showing the belt/deck information.

**To test if the belt and deck need replacement:** Using the 'SPEED' Up Arrow Key, walk on the unit at 3.5 mph for a minimum of 1 minute. Then run on the unit at 7.0 mph for a minimum of 1 minute. If the voltage is higher than 1100 watts, replace the belt and either flip or replace the deck.

Press the 'CLEAR' key to exit the Belt/Deck test and return to the System Test Menu.

# DIAGNOSTICS: SYSTEM TEST – LIFEPULSE™ MODE

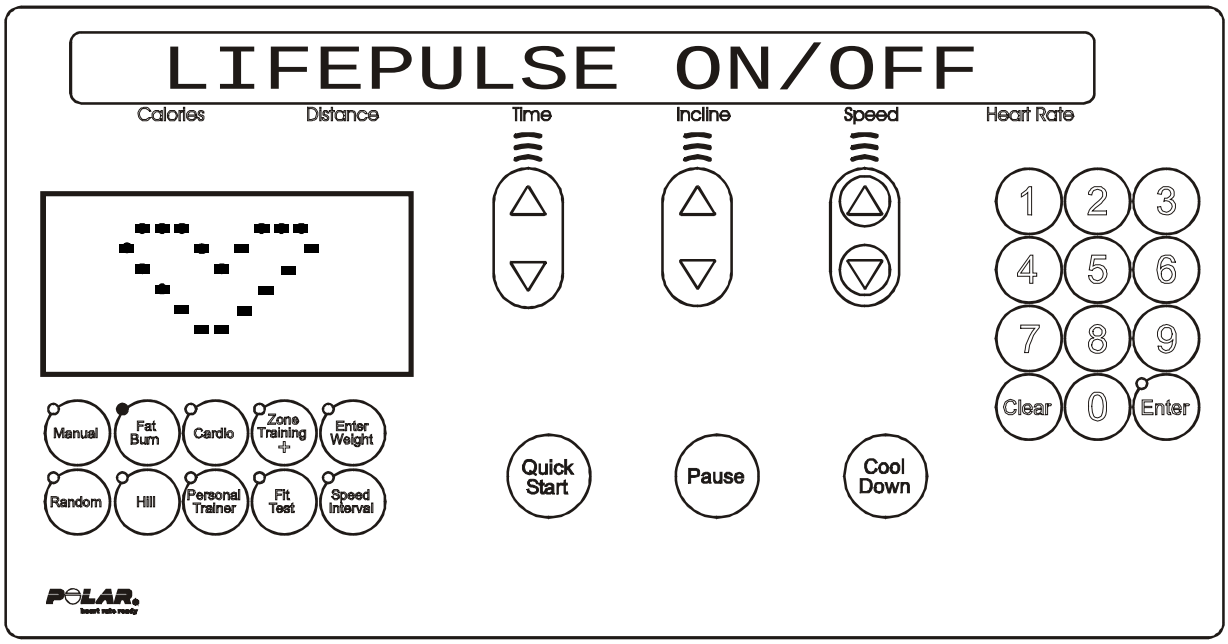


Upon initial entry to this test, a message concerning the configuration of the Lifepulse™ system On/Off will occur. This test will allow the user to test the Lifepulse™ heart rate system.

Following this message, the Lifepulse™ system can be manually tested. A heart will be in the profile window. The system will show when the user has placed their hands on the Lifepulse™ sensors. When the left sensor detects hands on condition, a ‘L’ will be placed in the profile window with the heart. When the right sensor detects hands on condition, a ‘R’ will be placed in the profile window with the heart.

A timer will start counting from the time when a both left and right hands on condition occurs to when the Lifepulse™ system can give the user their heart rate. This timer will stop when the heart rate is given.

The gain value of the heart rate signal is shown. The confidence level of the heart rate value is displayed. The value ranges from 0 to 9. A value of 9 is considered to be high confidence. A value of 0 is considered to be low confidence.

The speed system and incline systems can be activated in this test. However, the display will only show the target speed or incline for two seconds while the speed/incline keys are being pressed. It will then return to showing the Lifepulse™ information.

Press the ‘CLEAR’ key to exit the Lifepulse™ test and return to the System Test Menu.

# DIAGNOSTICS: SYSTEM TEST – TELEMETRY MODE

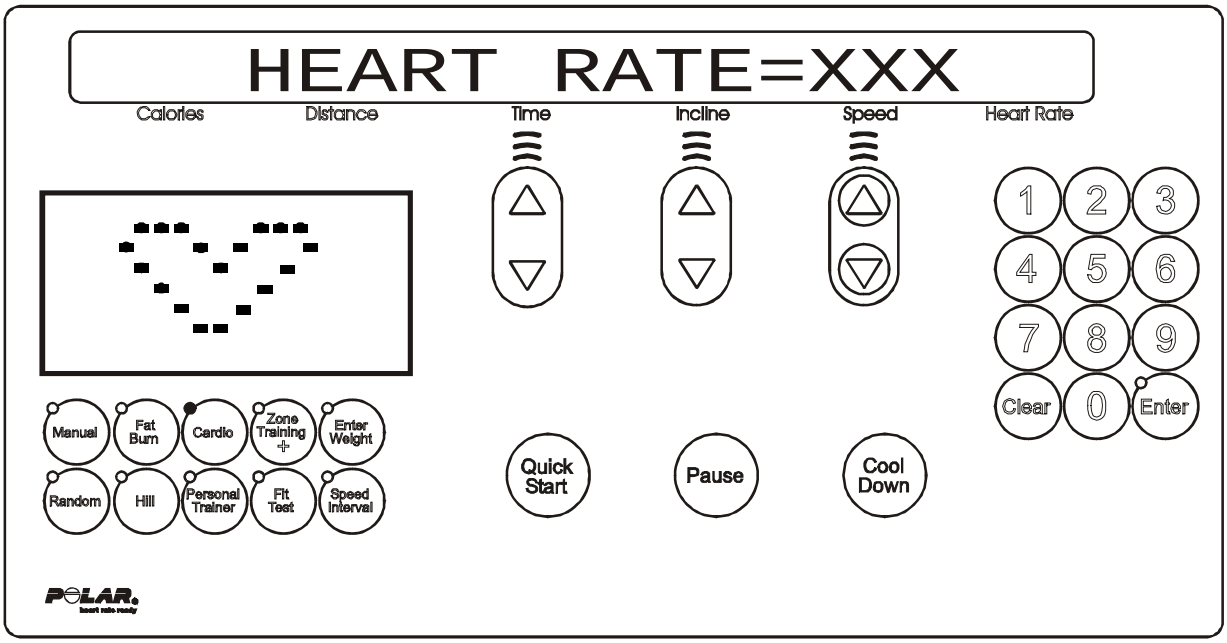


Upon initial entry to this test, a message concerning the telemetry system on/off will occur. This test will allow the user to test the telemetry heart rate system. If the telemetry heart rate system is OFF, no heart rate value will be given.

If the system is enabled, a telemetry heart rate signal can be provided and a heart rate value will be shown. The signal will also generate the ‘ENTER’ led to flash at the heart rate pulse frequency.

Press the ‘CLEAR’ key to exit the Telemetry Heart Rate test and return to the System Test Menu.

# DIAGNOSTICS: SYSTEM TEST – SMART STOP MODE

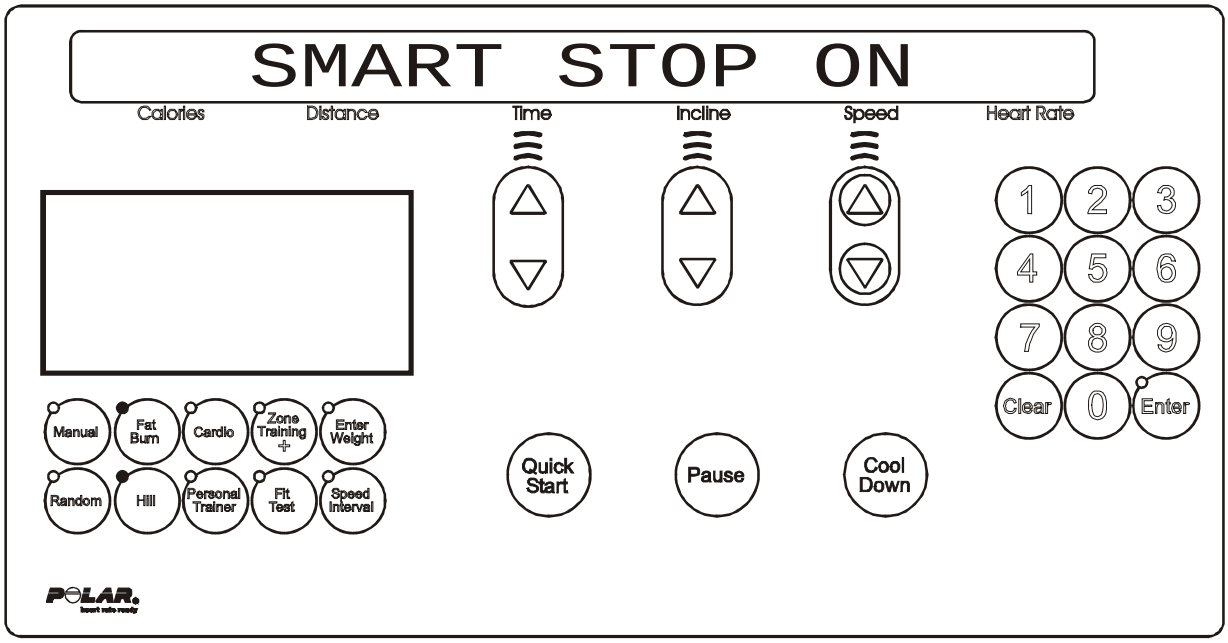


Upon entry into the test, if the smart stop PCB is not plugged in, a message will be displayed “Smart Stop Unplugged”. This test will allow the user to test the Smart Stop System. If the smart stop system detects a user it will scroll the profile window from empty to full depending on the percentage of detection that is occurring. Other smart stop information will scroll automatically every 3 seconds.

The following is a list of the current information that can be seen. If an error has occurred, refer to the troubleshooting section for corrective action.

| **ERROR CONDITION** | **DISPLAYED INFORMATION** |
|---|---|
| SMART STOP UNPLUGGED | SMART STOP ON<br>SMART STOP OFF<br>USER DETECTED<br>USER NOT DETECTED<br>SMART STOP ADJUST-XX |

The smart stop system can be turned ON/OFF in this test. When the message “SMART STOP ON” is placed on the message center, an arrow key will toggle it to “SMART STOP OFF”.

The display can be put into a locked mode by pressing the ‘PAUSE’ key. This will prohibit the scrolling of the smart stop information.

Pressing the ‘CLEAR’ key to exit the smart stop test and return to the System Test Menu.

# DIAGNOSTICS: SYSTEM TEST – DIPLAY TEST MODE

This test will light each individual segment per character until complete. It will then light each character separately until all characters have been lit. Each individual led will be tested also. If the ‘PAUSE’ key is pressed, the sequence will halt and remain there until the ‘PAUSE’ is pressed again.

Pressing the ‘PAUSE’ key can LOCK the display. This will prohibit the scrolling of the LED’s.
Pressing the ‘CLEAR’ key to exit the Walking Led test and return to the Keypad test.

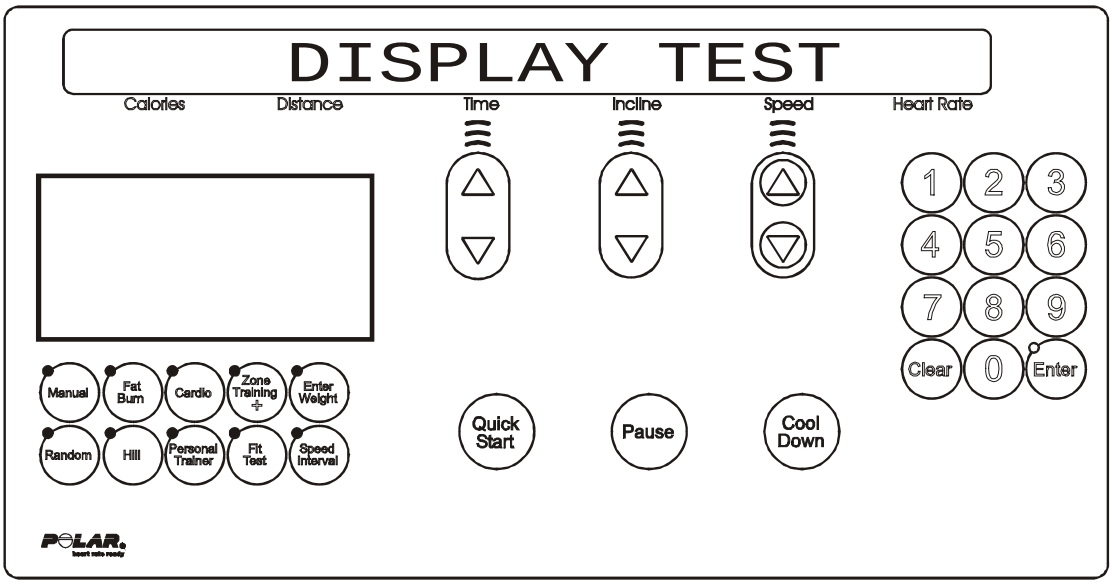


Upon entry to this test, all lights will be turned ON. This test will allow the user to test the display console.

Pressing keys will result in a beep sound and, for all but the ‘ENTER’ and ‘CLEAR’ keys, a character will be repeated across the message center display.

| KEYS | DISPLAYED CHARACTER | KEYS | DISPLAYED CHARACTER |
|---|---|---|---|
| 0 | ‘0’ | FIT TEST | ‘L’ |
| 1 | ‘1’ | TIME UP | ‘N’ |
| 2 | ‘2’ | INCLINE UP | ‘P’ |
| 3 | ‘3’ | SPEED UP | ‘Q’ |
| 4 | ‘4’ | TIME DOWN | ‘R’ |
| 5 | ‘5’ | INCLINE DOWN | ‘T’ |
| 6 | ‘6’ | SPEED DOWN | ‘U’ |
| 7 | ‘7’ | QUICK | ‘V’ |
| 8 | ‘8’ | PAUSE | ‘W’ |
| 9 | ‘9’ | COOL DOWN | ‘X’ |
| MANUAL | ‘C’ | STOP | ‘Y’ |
| FAT BURN | ‘D’ | DOWN | ‘Z’ |
| CARDIO | ‘E’ | UP | ‘S’ |
| RANDOM | ‘H’ | ZONE TRAINING + | ‘F’ |
| HILL | ‘J’ | SPEED INTERVAL | ‘M’ |
| PERSONAL TRAINER | ‘K’ | ENTER WEIGHT | ‘G’ |

Pulling the Emergency Stop switch will result in the message:
‘REPLACE EMERGENCY STOP SWITCH’.

Pressing the ‘CLEAR’ key to exit the Display test and return to the System Test Menu.
Pressing the ‘ENTER’ key will advance to Walking Led test.

# DIAGNOSTICS: SYSTEM TEST – REAL TIME CLOCK MODE

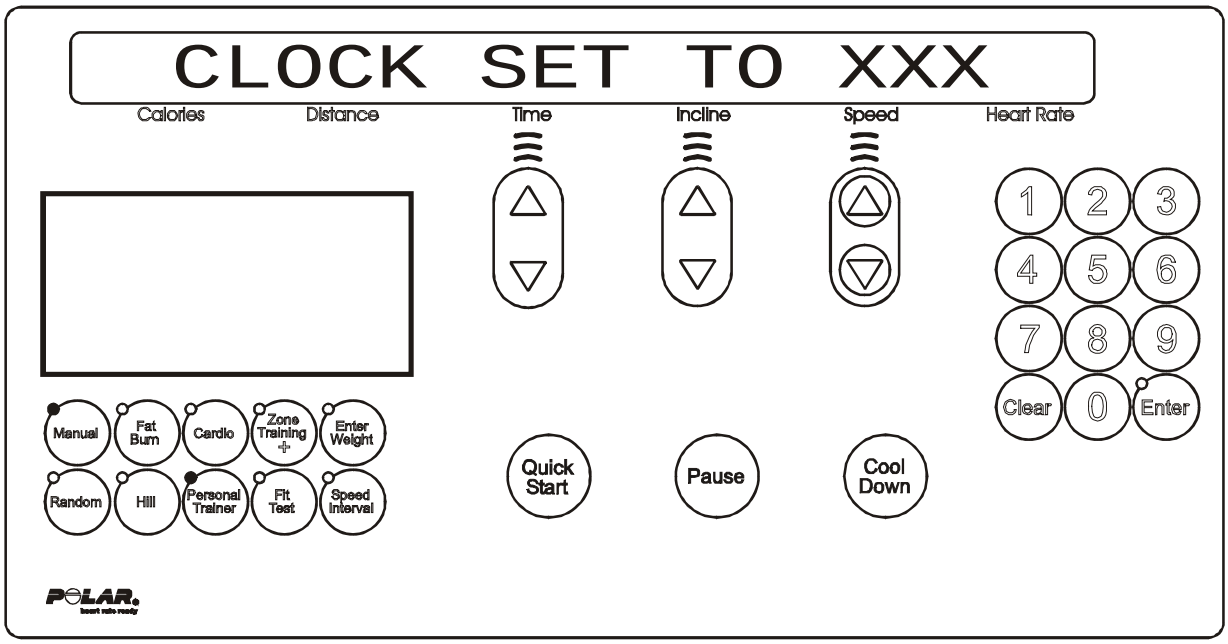


This test allows the user to see the current time set on the frame tag real time clock. If the communication is bad or the frame tag is unplugged the following messages will appear. Refer to the troubleshooting section for corrective action.

FRAME CLOCK COMM BAD
FRAME TAG UNPLUGGED

If there are no errors, a message concerning whether the clock is set the local time or default “Greenwich Mean Time”. Either message may appear:
“CLOCK SET TO LOCAL” or
“CLOCK SET TO GMT”

The message will be followed by the current real time clock information.
Press the ‘CLEAR’ key to exit the Frame Tag Real Time Clock test and return to the System Test Menu.

# DIAGNOSTICS: SYSTEM TEST – FRAME TAG EEPROM MODE

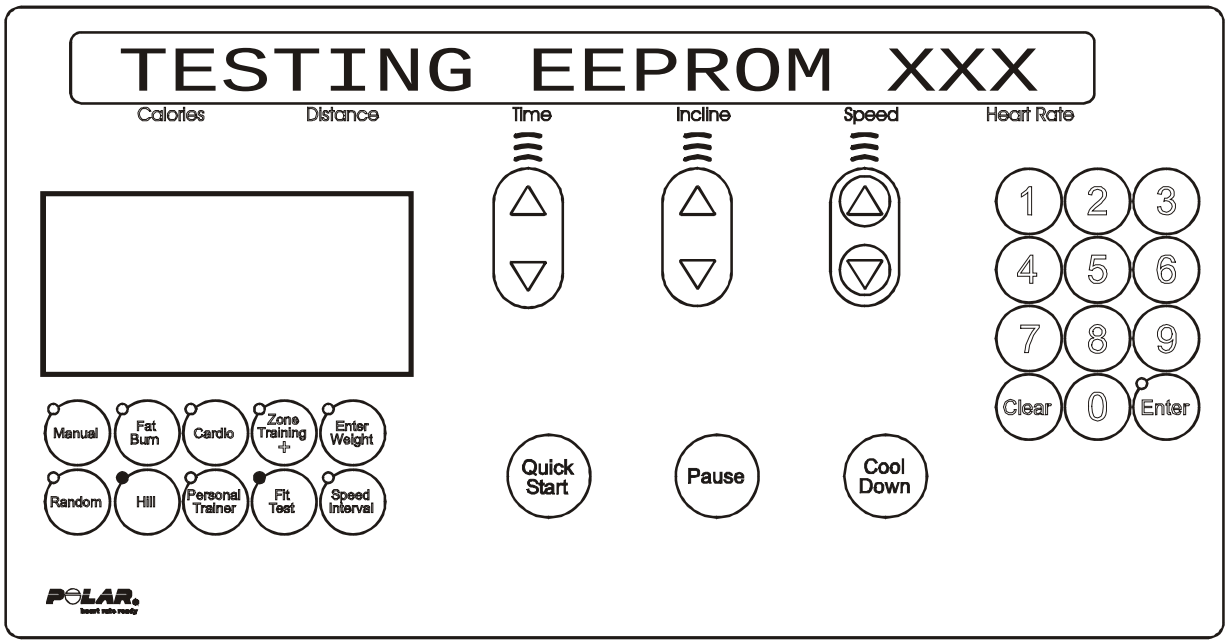


This test allows the user to test the frame tag EEPROM. This test will read/write/replace all used locations in the frame tag EEPROM. If there is an error, the bad location will be displayed. The following is a list of current information that can be seen. If an error has occurred, refer to the troubleshooting section for corrective action.

| **ERROR CONDITION** | **DISPLAYED INFORMATION** |
|---|---|
| FRAME EEPROM COMM BAD | TESTING FRAME EEPROM |
| FRAME TAG UNPLUGGED | EEPROM TESTED GOOD |
| | EEPROM BAD AT XX |

Press the ‘CLEAR’ key to exit the Frame Tag EEPROM test and return to the System Test Menu.

# DIAGNOSTICS: SYSTEM TEST – DISPLAY CONSOLE EEPROM TEST MODE

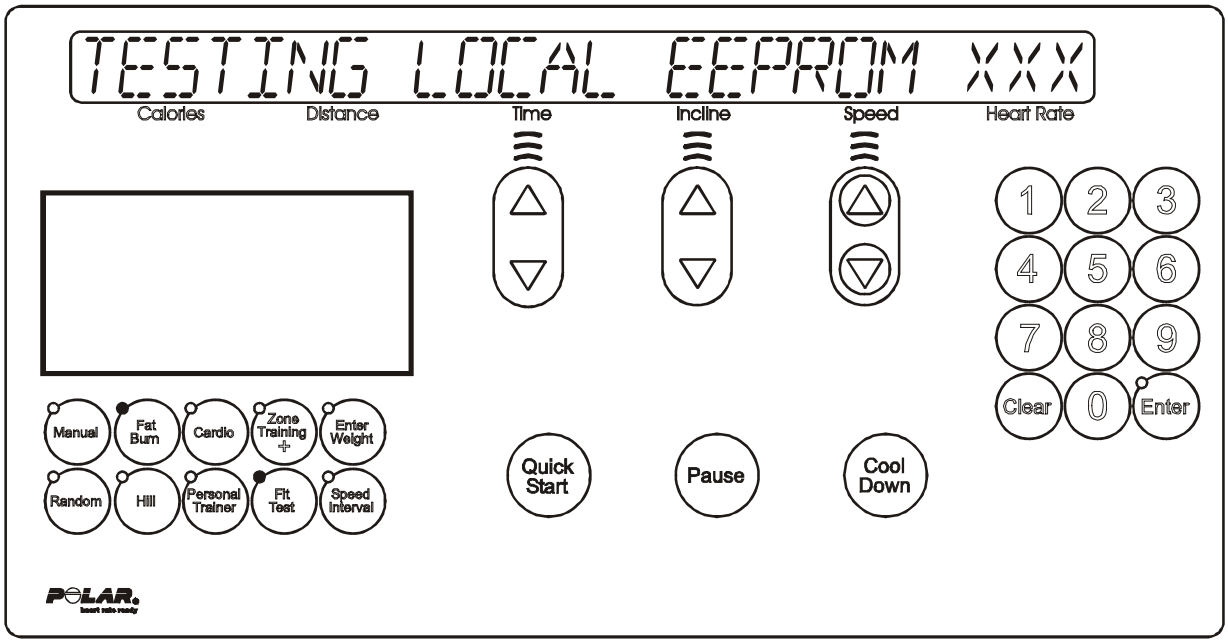


This test allows the user to test the display console EEPROM. This test will read/write/replace all used locations in the display console EEPROM. The EEPROM location being tested will be displayed in the heart rate window. If there is an error, the bad location will be displayed.

The following is a list of current information that can be seen. In an error has occurred, refer to the troubleshooting section for corrective action.

| **DISPLAYED INFORMATION** | **ERROR CONDITION** |
|---|---|
| TESTING LOCAL EEPROM | EEPROM BAD AT XX |
| EEPROM TESTED GOOD | |

Press the ‘CLEAR’ key to exit the Display Console EEPROM test and return to the System Test Menu.

# DIAGNOSTICS: SYSTEM TEST – LIFECENTER TEST MODE

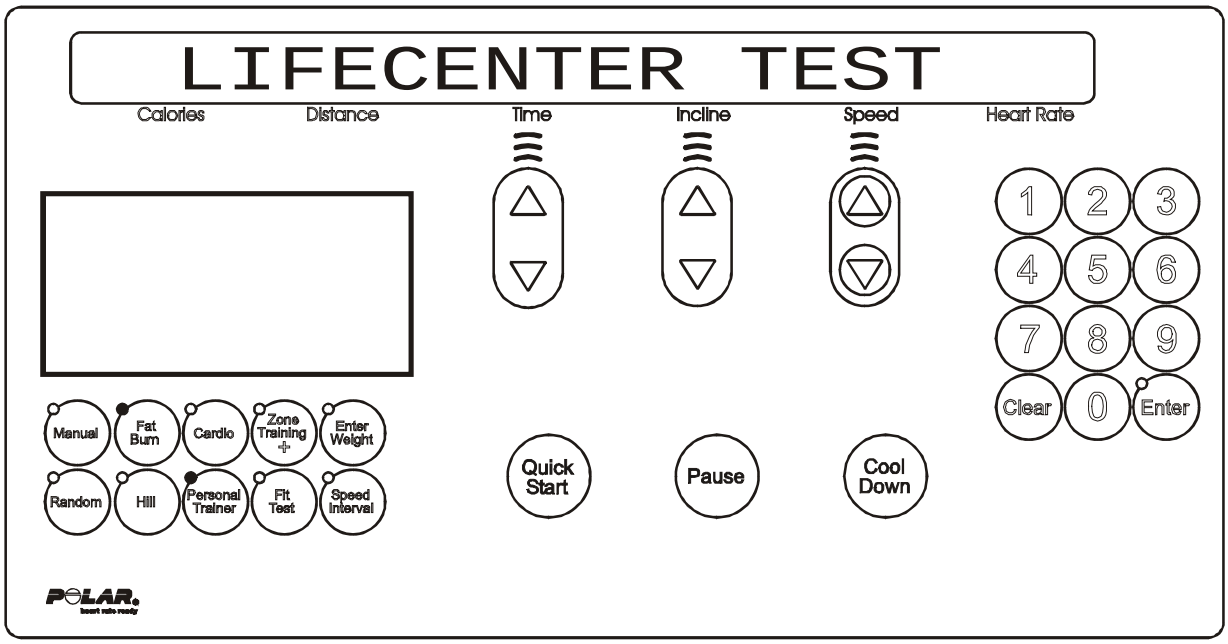


This test will give information concerning whether there is a lifecenter system connected to the treadmill. The following is a list of the current information that can be seen:

NONE
NULL - T-XX R-XX
OFF - T-XX R-XX
ON - T-XX R-XX
WAIT - T-XX R-XX

The “T-XX” is the last transmitted message to the lifelink card.
The “R-XX” is the last received message from the lifelink card.

Press the ‘CLEAR’ key to exit the Lifecenter test and return to the System Test Menu.

# DIAGNOSTICS: SYSTEM TEST – C-SAFE TEST MODE

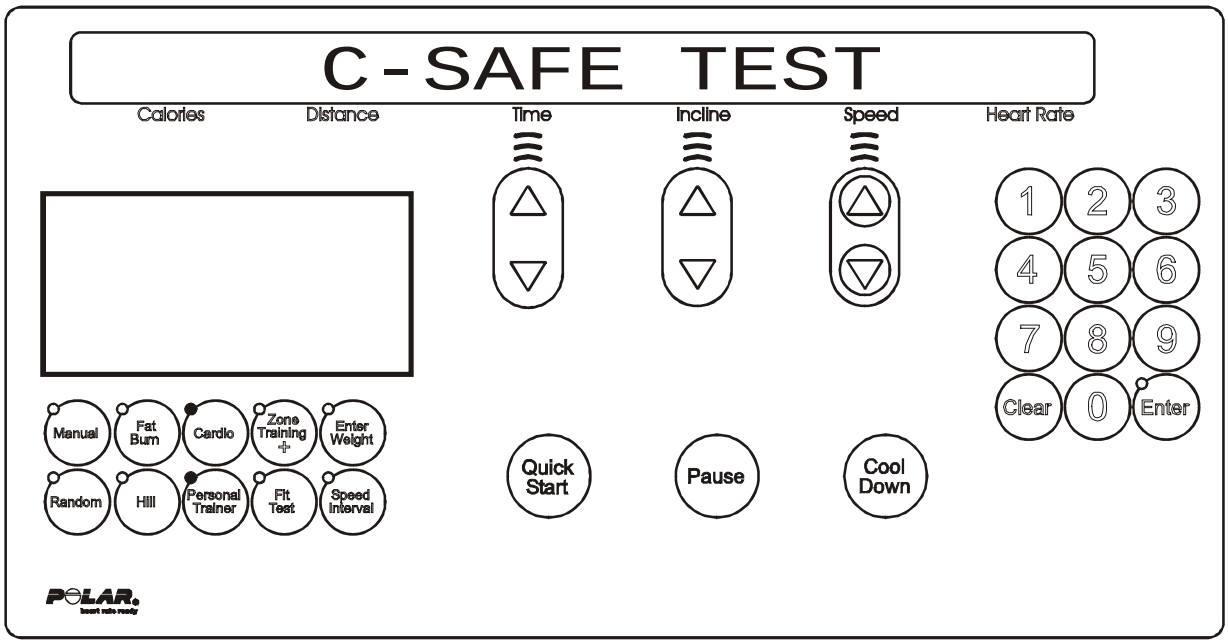


This test will give information concerning whether there is a C-SAFE system connected to the treadmill. The following is a list of the current information that can be seen:

NONE
NULL - T-XX R-XX
OFF - T-XX R-XX
ON - T-XX R-XX
WAIT - T-XX R-XX

The “T-XX” is the last transmitted message to the C-SAFE card.
The “R-XX” is the last received message from the C-SAFE card.

Press the ‘CLEAR’ key to exit the C-SAFE test and return to the System Test Menu.

# DIAGNOSTICS: INFORMATION MENU

Upon entry into the area, the message is:

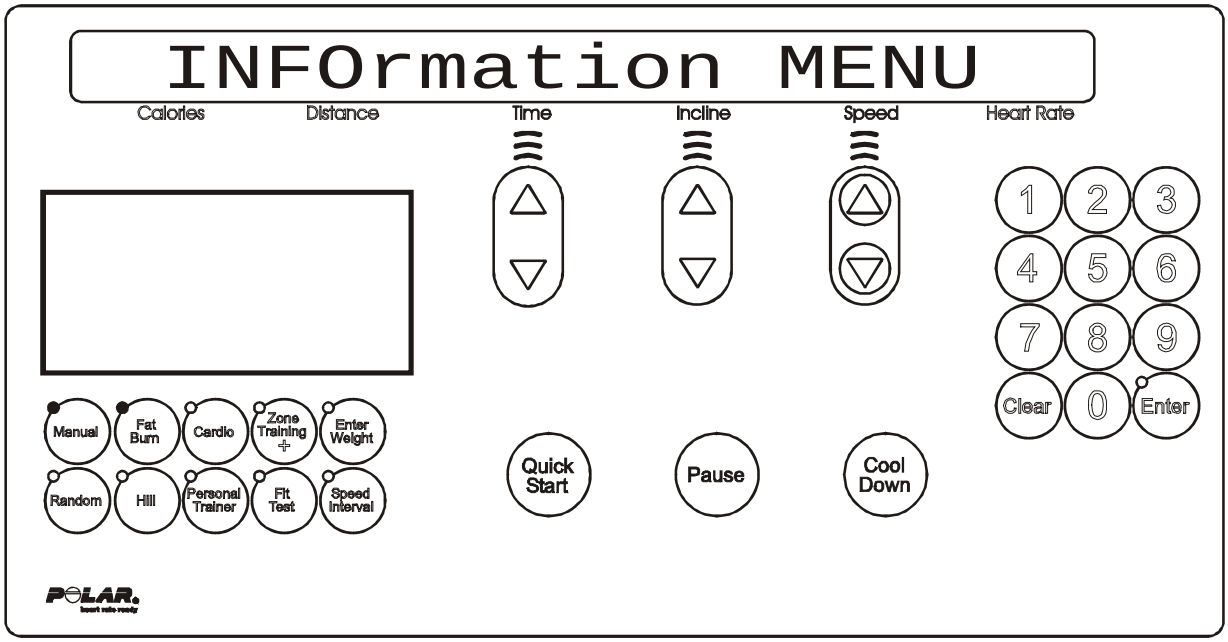


Followed by,

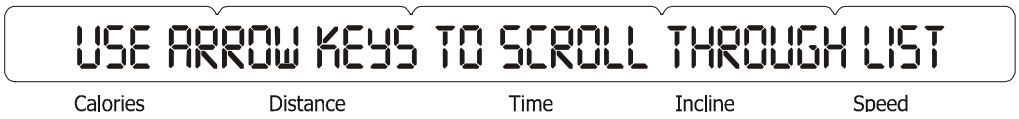


Using any of the arrow keys will allow you to scroll through the eight system information areas.

SYSTEM STATISTICS
SOFTWARE VERSIONS
MAIN MOTOR INFORMATION
LIFT MOTOR INFORMATION
WAX MOTOR INFORMATION
REAL TIME CLOCK INFORMATION
SYSTEM ERRORS
SYSTEM MAINTENANCE

Press the ‘ENTER’ key to enter the desired category.

# DIAGNOSTICS: INFORMATION – SYSTEM STATISTICS MODE

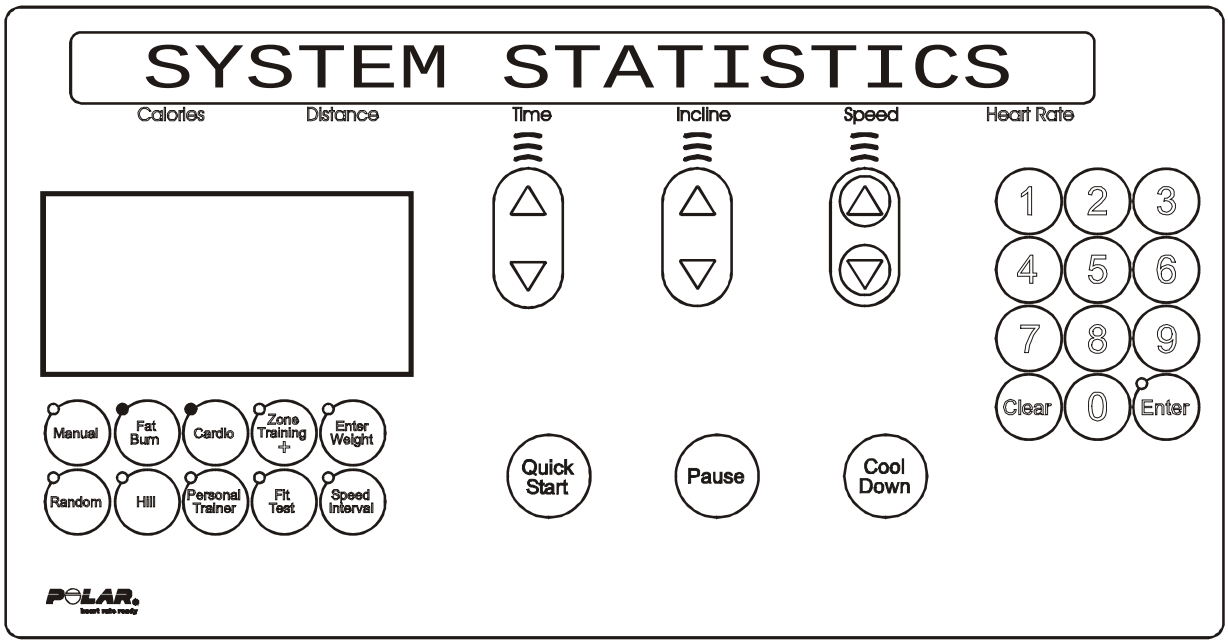


This area will allow the user to see system information concerning the following areas:

**DISPLAYED INFORMTION**

TOTAL HOURS
TOTAL MILES
BELT HOURS
BELT MILES
LIFT MINUTES
HILL PROGRAM SELECTIONS
RANDOM PROGRAM SELECTIONS

MANUAL PROGRAM SELECTIONS
FAT BURN PROGRAM SELECTIONS
CARDIO PROGRAM SELECTIONS
FIT TEST PROGRAM SELECTIONS
QUICK START PROGRAM SELECTIONS
CUSTOM 1-6 PROGRAM SELECTIONS
MISCELLANEOUS CUSTOM PROGRAM SELECTIONS
SPORT TRAINING PROGRAM SELECTIONS
SPEED INTERNAL PROGRAM SELECTIONS
ZONE TRAINING AND PROGRAM SELECTIONS

The information will automatically scroll every 3 seconds or using any of the arrow keys will allow you to scroll through the system statistics.

Pressing the ‘PAUSE’ key can LOCK the display. This will prohibit the scrolling of the information.
Press the ‘CLEAR’ key to exit the System Statistics and return to the System Info Menu.

# DIAGNOSTICS: INFORMATION – SOFTWARE VERSION MODE

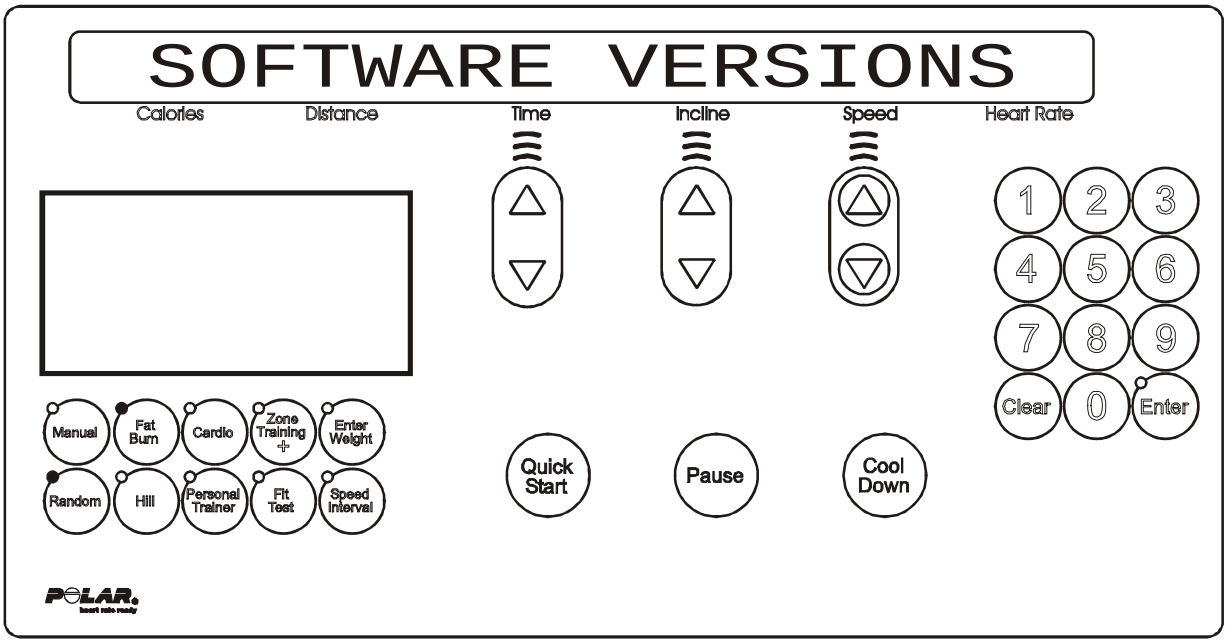


This area will allow the user to see system information concerning the following areas:

## DISPLAYED INFORMATION

CONSOLE SOFTWARE VERSION
MOTOR CONTROLLER SOFTWARE VERSION
WAX/LIFT BOARD SOFTWARE VERSION
LIFEPULSE SOFTWARE VERSION
C-SAFE VERSION
BOOT VERSION

The information will automatically scroll every 3 seconds or using any of the arrow keys will allow you to scroll through the system information.

Press the “QUICK START” Key to view the unit serial number.

Press the ‘CLEAR’ key to exit the Software Versions and return to the System Info Menu.

# DIAGNOSTICS: INFORMATION – MAIN MOTOR INFO MODE

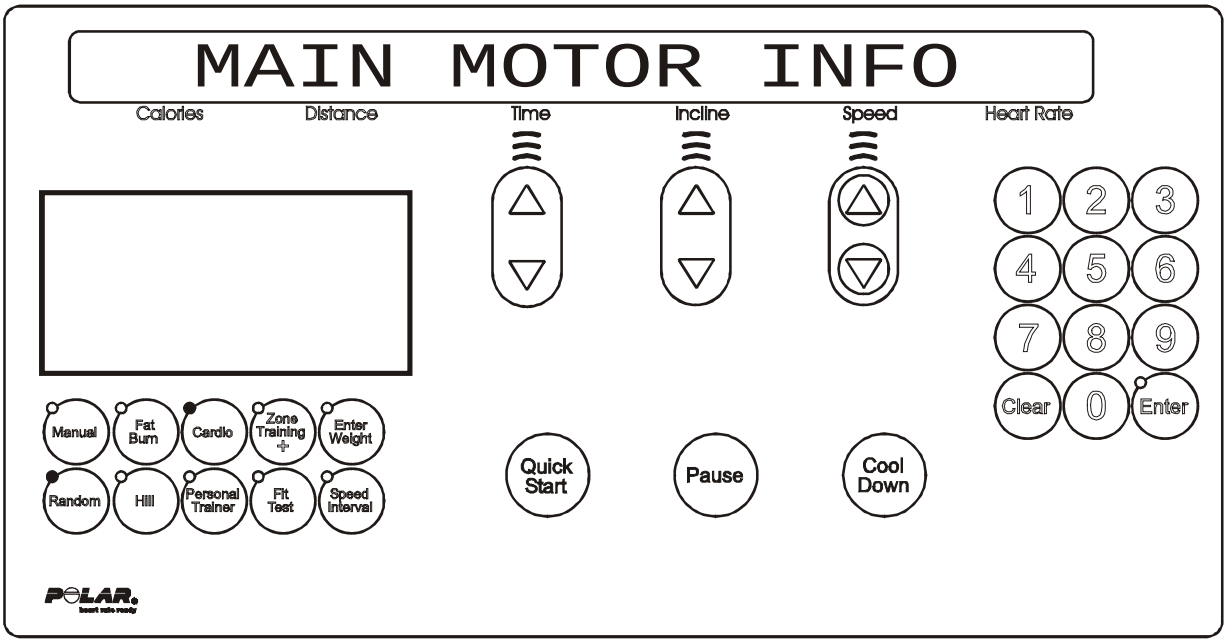


This area will allow the user to see the current information about the main motor and motor controller. The information will cover the following areas:

## DISPLAYED INFORMATION

MOTOR MINUTES
NUMBER OF POWER UP RESETS
NUMBER OF HARDWARE CURRENT ERRORS
NUMBER OF STATIC CURRENT TRIP
NUMBER OF MAX TEMPERATURE TRIP
NUMBER OF MAXIMUM VOLTAGE TRIP
NUMBER OF DYNAMIC CURRENT TRIP
MAXIMUM STATIC CURRENT VALUE
MAXIMUM TEMPERATURE VALUE
MAXIMUM VOLTAGE VALUE
MAXIMUM DYNAMIC CURRENT VALUE
NUMBER OF SPEED SENSOR ERROR

The information will automatically scroll every 3 seconds or using any of the arrow keys will allow you to scroll through the main motor information.

Pressing the ‘PAUSE’ key can LOCK the display. This will prohibit the scrolling of the information.
Press the ‘CLEAR’ key to exit the Main Motor Info and return to the System Info Menu.

# DIAGNOSTICS: INFORMATION – LIFT MOTOR INFO MODE

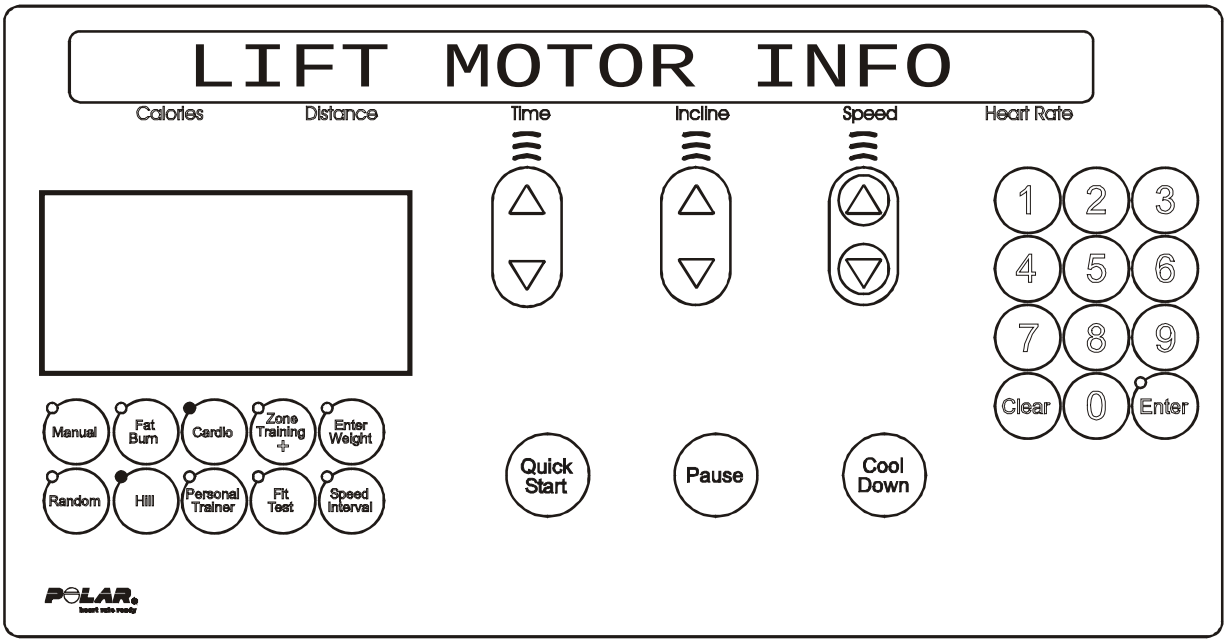


This area will allow the user to see the current information about the lift motor. The information will cover the following areas:

## DISPLAYED INFORAMTION

1. UNIT CONFIGURATION – NEGATIVE OR NON-NEGATIVE
2. CURRENT LIFT ON TIME IN MINUTES
3. BUCKET (Refer to table)

| BUCKET - INCLINE AT PERCENTAGE OF RANGE | | | | |
|---|---|---|---|---|
| BUCKET 0 | -3.0 TO -2.1 PERCENT | | BUCKET 10 | 7.0 TO 6.1 PERCENT |
| BUCKET 1 | -2.0 TO - 1.1 PERCENT | | BUCKET 11 | 8.0 TO 7.1 PERCENT |
| BUCKET 2 | -1.0 TO –0.1 PERCENT | | BUCKET 12 | 9.0 TO 8.1 PERCENT |
| BUCKET 3 | 0.0 PERCENT | | BUCKET 13 | 10.0 TO 9.1 PERCENT |
| BUCKET 4 | 1.0 TO 0.1 PERCENT | | BUCKET 14 | 11.0 TO 10.1 PERCENT |
| BUCKET 5 | 2.0 TO 1.1 PERCENT | | BUCKET 15 | 12.0 TO 11.1 PERCENT |
| BUCKET 6 | 3.0 TO 2.1 PERCENT | | BUCKET 16 | 13.0 TO 12.1 PERCENT |
| BUCKET 7 | 4.0 TO 3.1 PERCENT | | BUCKET 17 | 14.0 TO 13.1 PERCENT |
| BUCKET 8 | 5.0 TO 4.1 PERCENT | | BUCKET 18 | 15.0 TO 14.1 PERCENT |
| BUCKET 9 | 6.0 TO 5.1 PERCENT | | | |

The information will automatically scroll every 3 seconds or using any of the arrow keys will allow you to scroll through the wax motor information.

Pressing the ‘PAUSE’ key can LOCK the display. This will prohibit the scrolling of the information.
Press the ‘CLEAR’ key to exit the Wax Motor Info and return to the System Info Menu.

# DIAGNOSTICS: INFORMATION – WAX MOTOR INFO MODE

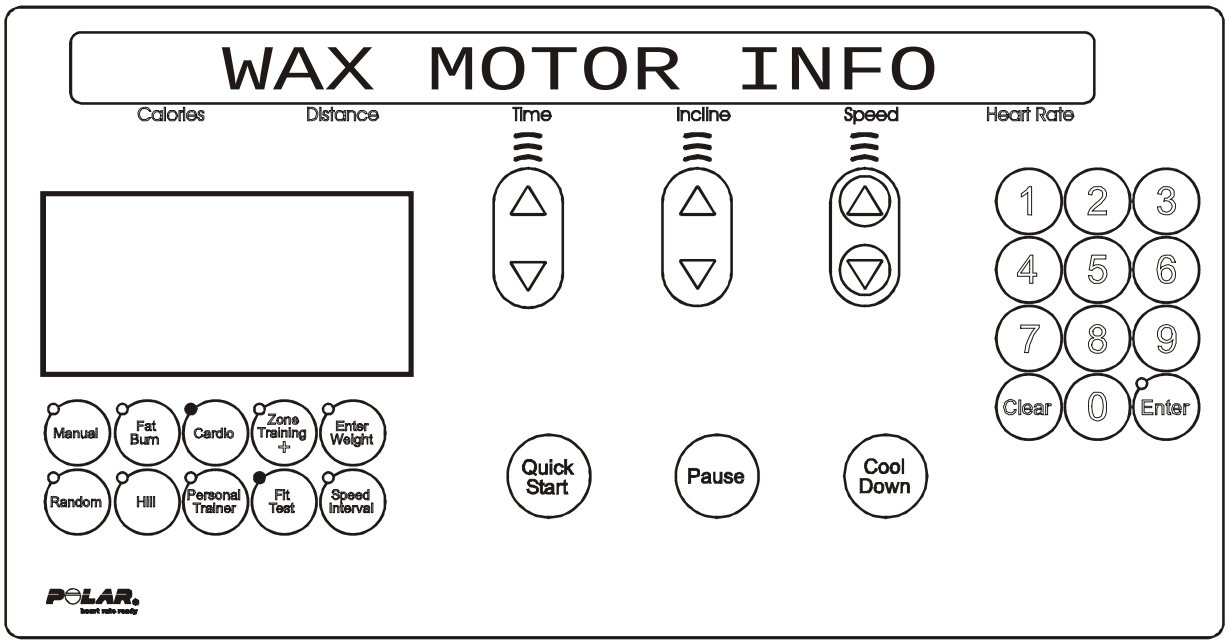


This area will allow the user to see the current information about the wax motor. The information will cover the following areas:

**DISPLAYED INFORMATION**

WAXER UNPLUGGED
WAXER FIRED – XXX
WAXER - XX/100 FULL
MANUAL WAX- XX TIMES
NEXT WAX - XX HOURS
INITIAL WAX- XX MINS
WAX INTERVAL XX MINS
MIN WAX SPEED- X.X

The information will automatically scroll every 3 seconds or using any of the arrow keys will allow you to scroll through the wax motor information.

Pressing the 'PAUSE' key can LOCK the display. This will prohibit the scrolling of the information.
Press the 'CLEAR' key to exit the Wax Motor Info and return to the System Info Menu.

# DIAGNOSTICS: INFORMATION – CLOCK INFO MODE

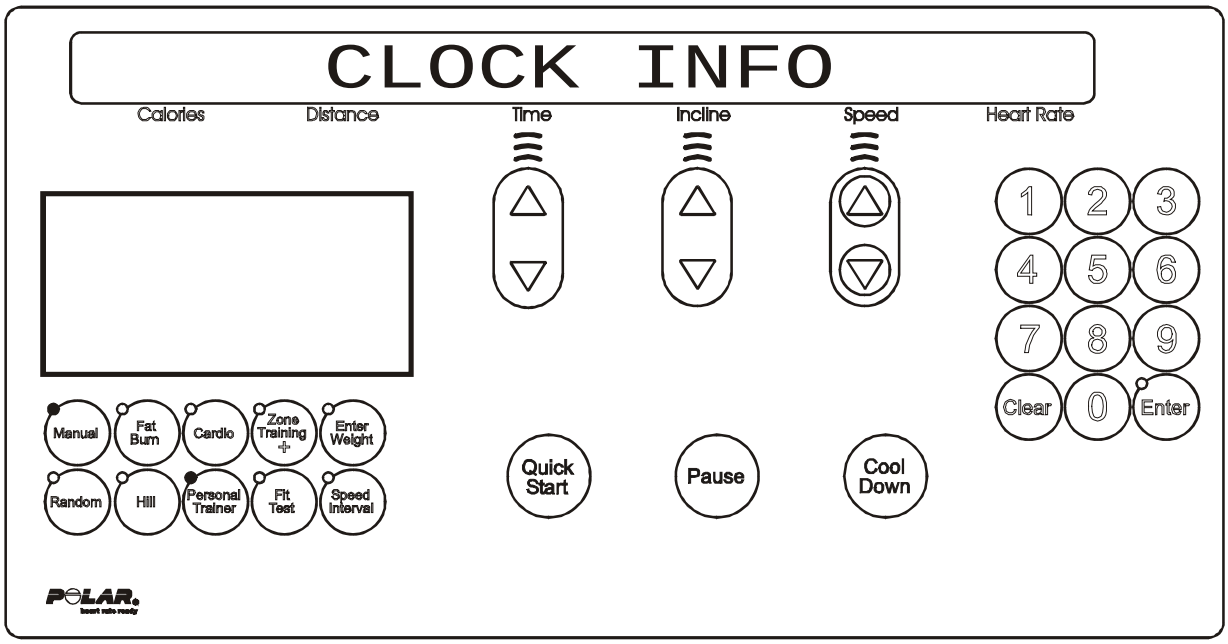


This area will allow the user to see the current information about the real time clock. The information will cover the following areas:

**DISPLAYED INFORMATION**

FRAME CLOCK COMM BAD
FRAME TAG UNPLUGGED
CURRENT SETTING FOR REAL TIME CLOCK

Press the ‘CLEAR’ key to exit the Real Time Clock Info and return to the System Info Menu.

# DIAGNOSTICS: INFORMATION – SYSTEM ERROR MODE

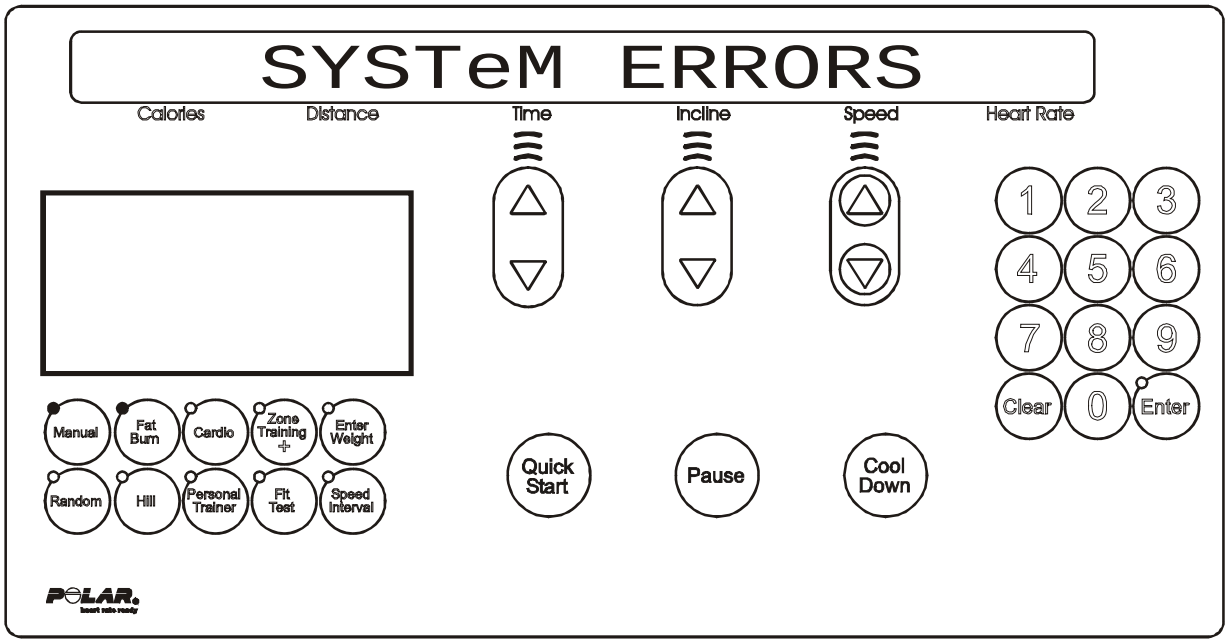


This area will allow the user to see the last 25 logged system errors. The error information will be displayed from the most recently logged to the oldest. Each system error will be displayed in the following format.

This format allows the user to scroll through all logged system errors without seeing any error details. The system errors will be scrolled automatically every 3 seconds or can be scrolled by using any of the arrow keys.

If the user wants to see the details about an error condition, the user must press the ‘ENTER’ key when the error title is displayed on the message center.

When the ‘ENTER’ key is pressed, all of the error log details will begin to display. These error details will scroll automatically every 3 seconds or can be scrolled by using any of the arrow keys.

Press the ‘CLEAR’ key to go back to just seeing the error titles.
Press the ‘CLEAR’ key to exit the System Errors and return to the System Info Menu.

# DIAGNOSTICS: INFORMATION – MAINTENANCE INFO MODE

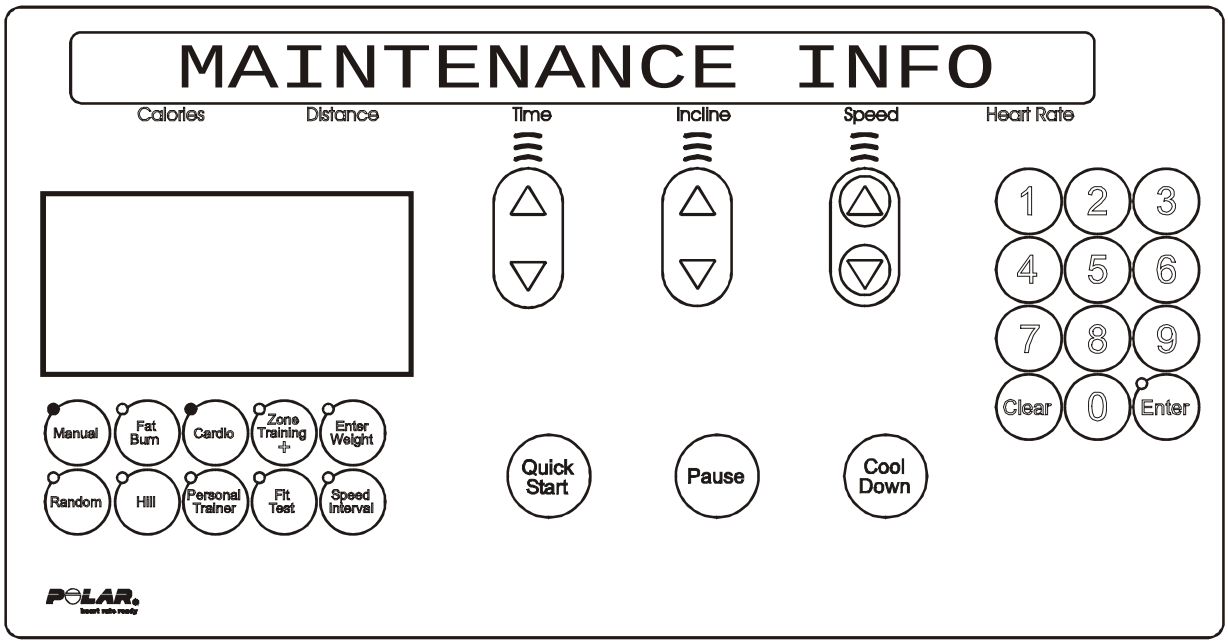


This area will allow the user to see the last 12 logged system repairs. The repair information will be displayed from the most recently logged to the oldest. Each system repair will be displayed in the following format.

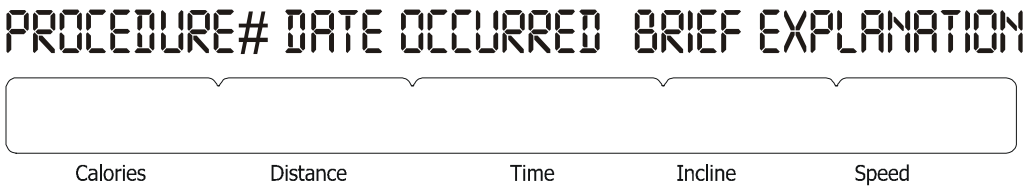


This format allows the user to scroll through all logged system repairs without seeing any repair details. The system repairs will be scrolled automatically every 3 seconds or can be scrolled by using any of the arrow keys.

If the user wants to see the details about a repair procedure, the user must press the ‘ENTER’ key when the repair title is displayed on the message center.

When the ‘ENTER’ key is pressed, all of the repairs procedure details will begin to display. These repair details will scroll automatically every 3 seconds or can be scrolled by using any of the arrow keys.

Press the ‘ENTER’ key to view system repair procedure.  Detail repair log as needed.
Press the ‘CLEAR’ key to exit the System Repair and return to the System Info Menu.

# DIAGNOSTICS: MAINTENANCE MENU

Upon entry into the area, the message is:

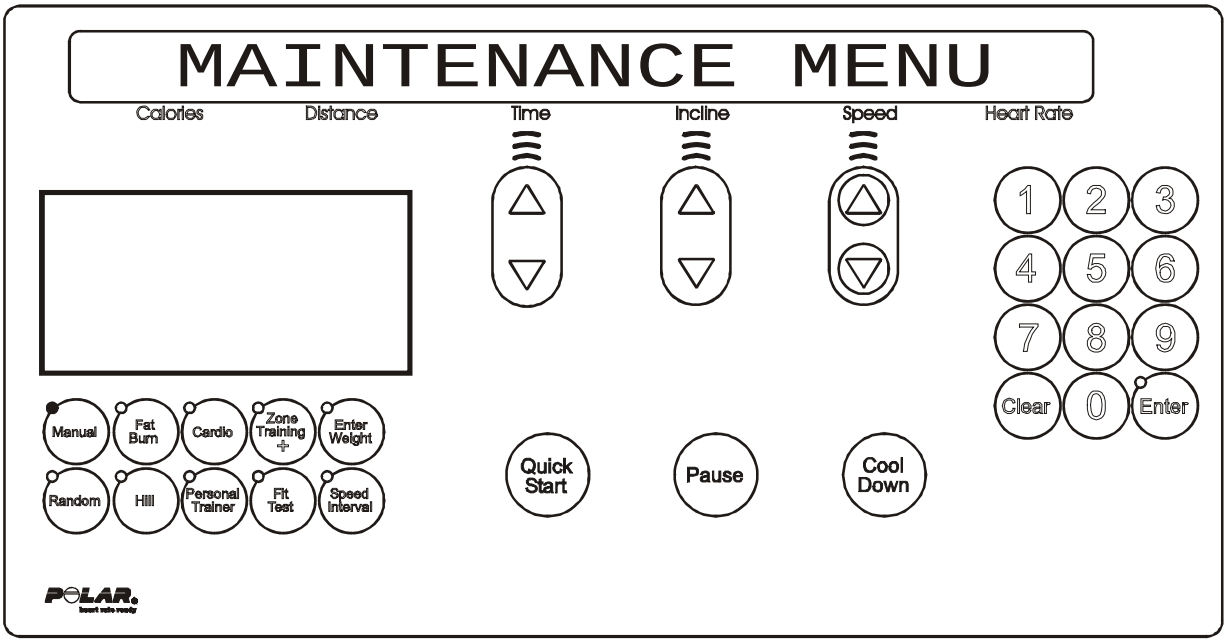


Followed by,

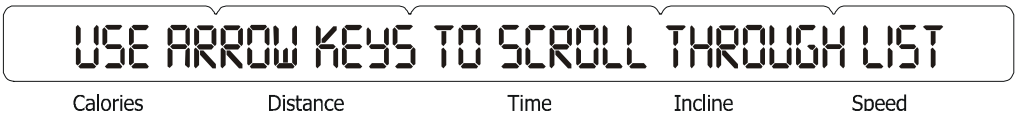


Using any of the arrow keys will allow you to scroll through the ten system maintenance procedures.

REPLACING BELT AND DECK
REPLACING WAXER BAG
REPLACING CONSOLE
REPLACING MOTOR CONTROLLER
REPLACING WAX LIFT BOARD
REPLACING STOP SWITCH
REPLACING OVERLAY BEZEL
REPLACING MAIN MOTOR
REPLACING LIFT MOTOR
REPLACING WAX MOTOR

Press the ‘ENTER’ key to choose the desired procedure.

Upon the selection of the desired procedure, the system will gather all-important information concerning that procedure and log the procedure and details to the frame tag EEPROM. Upon successful completion of the log, the message “REPAIR LOGGED” will be displayed.

Press the ‘CLEAR’ key to exit the System Maintenance and return to the Service Menu.

# DIAGNOSTICS: CONFIGURATION MENU

Upon entry into the area, the message is:

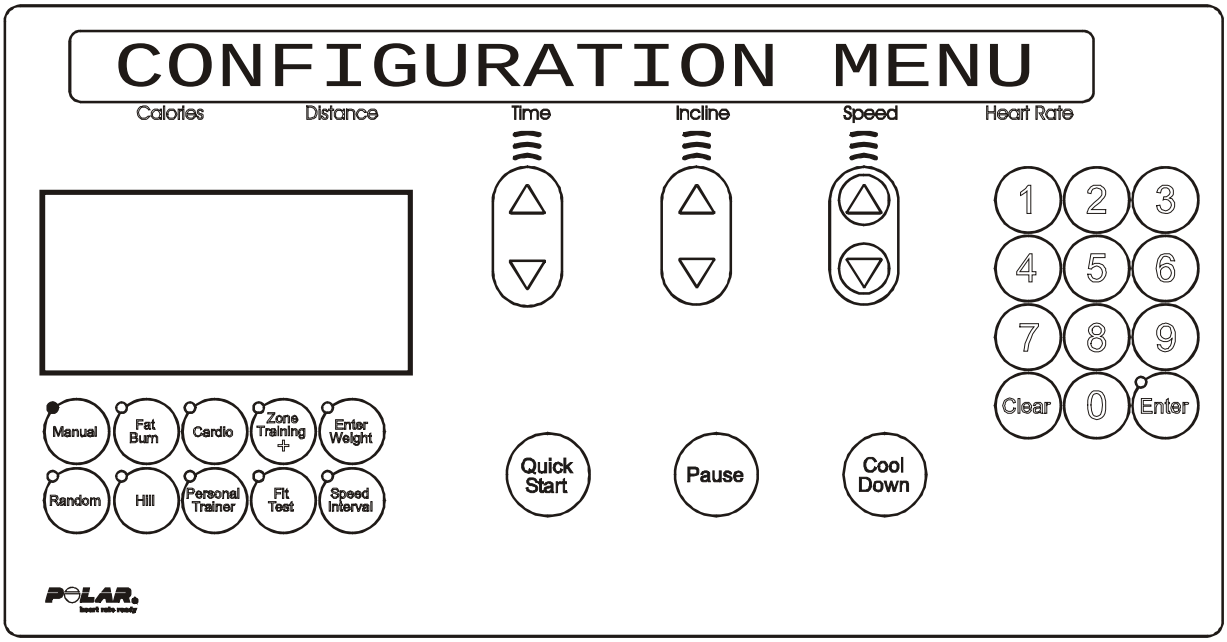


Followed by,

Using any of the arrow keys will allow you to scroll through the three system configuration areas.

MANAGER CONFIG
MANUFACTURE CONFIG
CLOCK CONFIG

Press the ‘ENTER’ key to choose the desire area.
Press the ‘CLEAR’ key to exit the Configuration Menu and return to the Service Menu.

# DIAGNOSTICS: CONFIGURATION – MANAGER CONFIGURATION MODE

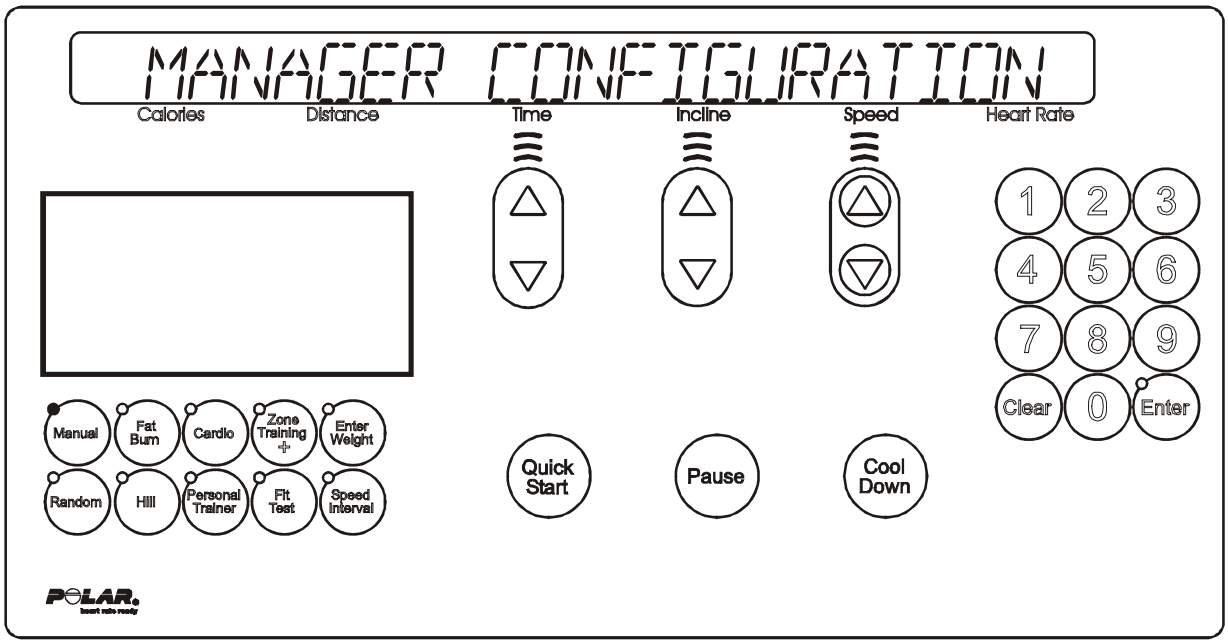


The information will automatically scroll every 3 seconds or using the ‘TIME UP’ or ‘TIME DOWN’ arrow keys will allow you to scroll through the configuration items.

The information can be changed when the item is displayed in the message center by using any of the remaining arrow keys to change the value.

## DIAGNOSTICS: CONFIGURATION - MANAGER CONFIGURATION MODE (Continued)

This area will allow the user to see the current configuration about the system. The information will cover the following areas:

| CONFIGURATION SETTING | FACTORY DEFAULT | DESCRIPTION |
|---|---|---|
| LANGUAGE | ENGLISH | Eight different languages can be selected: English, Dutch, Italian, Portuguese, German, French, Japanese, and Spanish. |
| MAXTIME SETUP | OFF | This feature enables fitness club managers to set workout duration limits during peak and non-peak hours of club traffic. If the setup is OFF, no duration limits are set. |
| STANDBY MODE SETUP | OFF | This feature enables fitness club manager to set periods at which the treadmill automatically powers up or powers down. |
| ENGLISH/METRIC UNITS | ENGLISH | The measurement unit type for weight, distance, and speed. |
| CUSTOM WORKOUT ENTRY | N/A | The trainer can define up to 6 different workouts consisting of a series of intervals (30), of a fixed duration in seconds, each containing a pre-defined incline, target heart rate percentage, or speed. |
| TELEMETRY | ON | Switching ON the telemetry feature makes it possible to use the Polar® compatible Heart Rate Zone Training exercise chest strap to monitor the heart rate. |
| SMART STOP | ON | This feature automatically pauses the workout if the user steps off the belt. |
| MAXIMUM SPEED | 12 MPH, 95TI<br>15 MPH, 97Ti<br>10 MPH, 93T U.S.<br>12 MPH, 93T Int'l | Fastest speed at which the treadmill can operate. |
| MINIMUM SPEED | .5 MPH | Slowest speed at which the treadmill can operate. |
| PAUSE TIMEOUT | 1 Minute | Maximum time during which a workout can remain in pause mode. |
| WATTS DISPLAY | OFF (Int'l ON) | If this option is enabled, the MESSAGE CENTER displays the Watts equivalent of the step rate. |
| METS DISPLAY | OFF | If this option is enabled, the MESSAGE CENTER displays the METs equivalent of the step rate. |
| PACE DISPLAY | ON | This feature displays the rate of minutes per mile. |
| CALORIE PER HOUR DISPLAY | ON (Int'l OFF) | If this option is enabled, the MESSAGE CENTER displays the number of calories burned per hour during the workout. |
| DISTANCE CLIMBED DISPLAY | OFF | The total distance climbed, based on the incline and speed of the treadmill. |
| WAX REMINDER | ON | After the first 100 hours, then every 168 hours, message will appear "MAINTENANCE REMINDER - CLEAN THE NOZZLE". |
| ACCELERATION RATE | 3 | The rate at which the treadmill accelerates to the selected speed, ranging from 1 (slowest) to 5 (fastest). |
| DECELARATION RATE | 3 | The rate at which the treadmill decelerates to the selected speed, ranging from 1 (slowest) to 5 (fastest). |
| MAXIMUM INCLINE | 15.0 | This option changes the maximum incline grade to a value lower than 15 percent. |
| START MESSAGE SETUP | N/A | See "Using the "Start Message Startup" in the Owners Manual. |
| QUICK START DISABLE | OFF (95Ti & 97Ti) | Use this option to disable or enable QUICK START workouts via the numeric keys. |
| FIT TEST PLUS | ON (Int'l OFF)<br>(95Ti & 97Ti) | Enable/Disable Fit Tests: Army PFT; Navy PRT, Marines PFT; Gerkin protocol; PEB |

Pressing the 'PAUSE' key can LOCK the display. This will prohibit the scrolling of the information.
All changed items will be saved to the memory upon exiting of the manager's configuration.
Press the 'CLEAR' key to exit the Manager's Config and return to the Configuration Menu.

The following message is for factory use only.

# DIAGNOSTICS: CONFIGURATION – CLOCK CONFIGURATION MODE

This area will allow the user to set the clock configuration in the system. The information can be obtained by using the 'ENTER' key to scroll the day, date, and time.

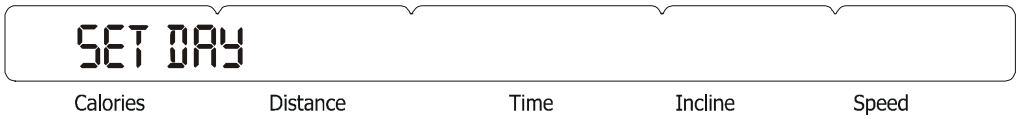


In this area, the user will be prompted to set the current day for the real time clock. The following is the message that will appear: "USE ARROW KEYS TO CHANGE DAY"

By pressing any of the arrow keys the user will set the current day for the real time clock.
Press the 'CLEAR' key to exit and save data. It will return to the Clock Configuration Menu.

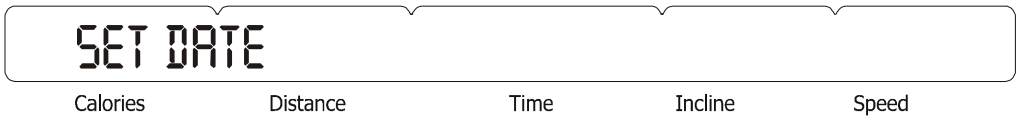


In this area, the user will be asked to set the current date for the real time clock. The following message will appear:

"ARROW KEYS TO CHANGE": "TIME KEYS = MONTH", "INCLINE KEYS = DATE", "SPEED KEYS = YEAR"

Press the 'CLEAR' key to exit and save data. It will return to the Clock Configuration Menu.

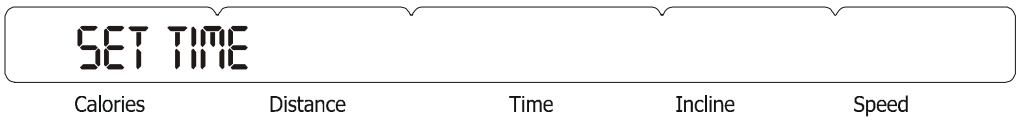


In this area, the user will be prompted to set the display mode of the real time clock. There are two modes that can be chosen by using the 'ARROW KEYS' to scroll and the 'ENTER' key to set local time:

Standard time = 12 hours or Military time = 24 hours

After the selection of the display mode, the user will be prompted to set the current time. The following message will appear:

"ARROW KEYS TO CHANGE": "TIME KEYS = HOURS", "INCLINE KEYS = MINUTES", "SPEED KEYS = SECONDS"

Press the 'CLEAR' key to exit the Set Time menu and return to the Clock Configuration Menu.

**NOTE**

# SECTION III

# HOW TO…
# SERVICE AND REPAIR GUIDE

**Page**
Upright Covers, Motor Cover, Front Cover ..... 3
Replace The Striding Belt And Deck ..... 4
Tensioning The Striding Belt ..... 9
Adjust Striding Belt Tracking ..... 10
Adjust Striding Belt Tension (Stall Test) ..... 11
Drive Motor Belt ..... 12
Drive Motor ..... 14
Drive Motor OPTO Sensor ..... 16
Front Roller ..... 17
Rear Roller ..... 20
Rear Roller Guards ..... 21
Lifespring Absorbers ..... 25
Anti-Static Tinsel ..... 26
Anti-Scuff Pads ..... 27
Wax Motor/Pump Assembly ..... 29
Wax Bag ..... 30
Lift Motor ..... 32
Motor Controller And Wax Lift Board (Configuration #1) ..... 33
Motor Controller Assembly, Wax Lift Assembly, and Capacitor PCB (Configuration #2) ..... 35
Fan Assembly – Configuration #1 Only ..... 37
Frame Tag Board ..... 38
Stop Button/Switch ..... 40
Smart Stop Circuit Board ..... 42
Heart Rate Sensors ..... 43
On/Off Switch ..... 44
Accessory Cup Holders ..... 45
Line Cord ..... 46
Line Filter ..... 47
Display Board Pcb ..... 48
Telemetry Receiver ..... 49
Main Wiring Harness ..... 50
Console Assembly ..... 51
Overlay Bezel ..... 52
ERGO Bar, Handrail, And Uprights ..... 53
Clean The Wax Nozzle ..... 54
Lift Actuator ..... 55
Leveler Assembly ..... 56
LCD Integrated Console Service Review ..... 57
Headphone Jack ..... 58
Inverter, Single Computer, & Interface Board ..... 59
Touch Screen Assembly ..... 60

## NOTES

# How To... Replace the Upright Covers, Motor Cover, Front Cover

**Special Service Tools Required: NONE**

1. Turn the unit power OFF at the switch, and then unplug the line cord at the wall outlet.

2. Remove the left and right Inside Upright Covers.

3. Remove the Front Cover screws (4) and remove the Front Cover from the front of the unit.

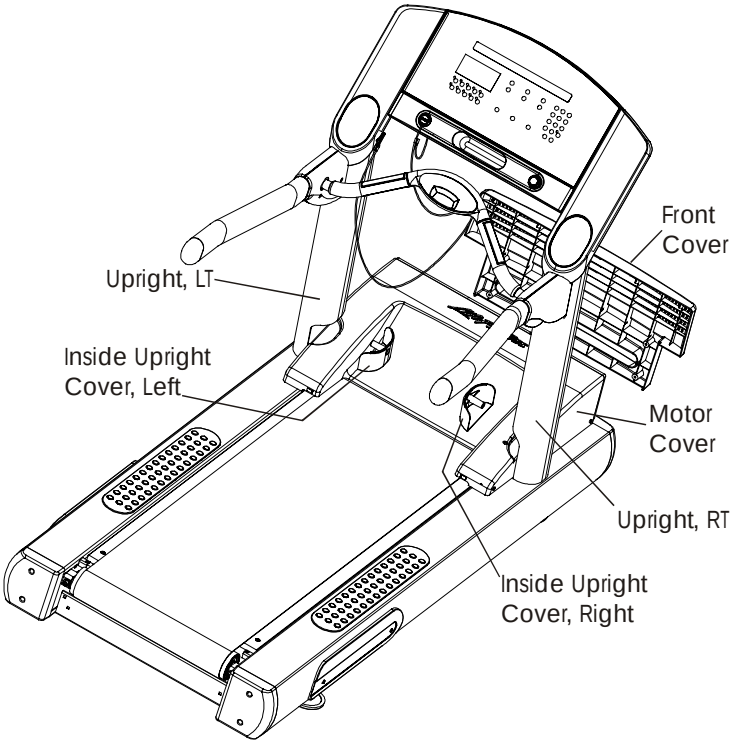


4. Remove the Motor Cover screws (4), and then lift the cover out from between the support Uprights.

5. To re-assemble covers, first install the Motor Cover and secure it in place. Next, install the Front Cover and Inside Upright Covers.

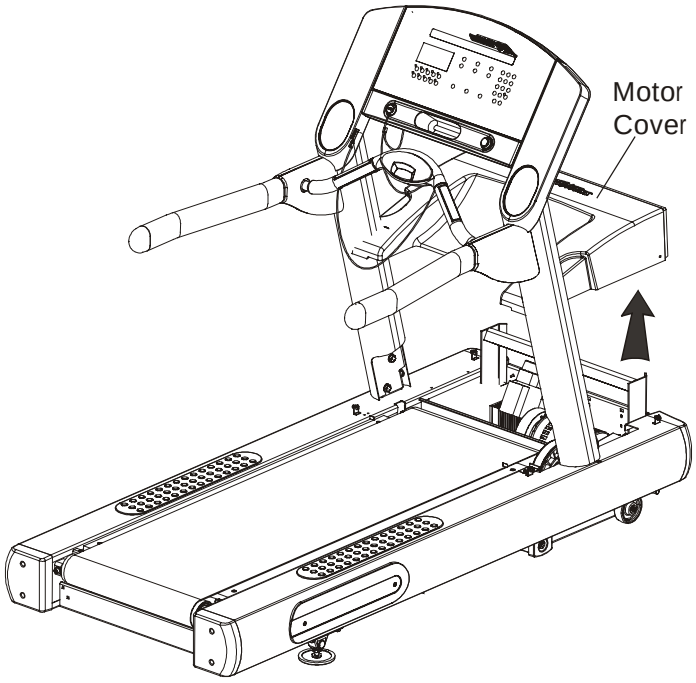

# How To... Replace the Striding Belt and Deck

**Special Service Tools Required: NONE**

**IMPORTANT: When replacing the striding belt, the deck must be flipped to the unused waxed side or else replaced. Whenever a deck is replaced, the striding belt must be replaced. Before flipping a deck, wipe off any debris from the unused waxed side without removing the wax. When installing the unused side into position, be careful not to disturb the waxed side. If both sides of a deck are used, then the deck must be replaced.**

1. Turn the unit power OFF at the switch, and then unplug the line cord at the wall outlet.

2. Remove the Front Cover. See “How To…” in this section.

3. **Units with Configuration No 1:** Remove four screws securing the Roller Covers and Guards, and then remove the Roller Covers and Guards from the Rear Roller. **Units with Configuration No. 2:** Remove four screws securing Roller Guards, and remove the Roller Guards from the Rear Roller.

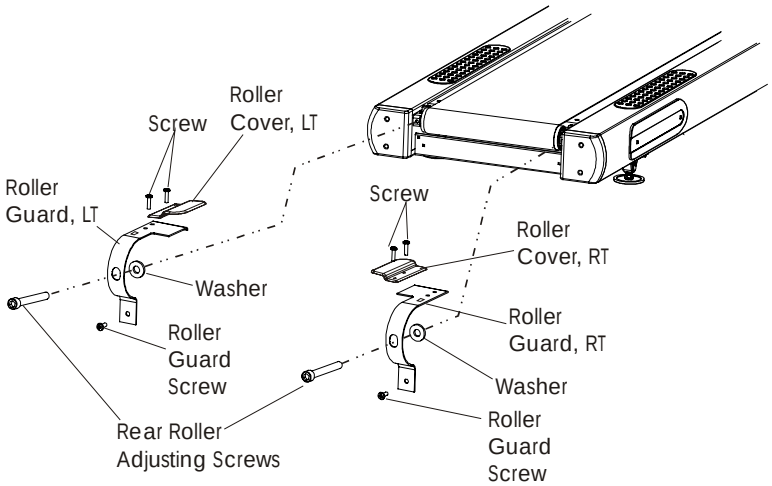


**Configuration No. 1**

4. Remove the Rear Roller Adjusting Screws.

Note: Index the initial position of the Adjusting Screw or count the number of rotations when loosening the Roller Adjusting Screws for proper Striding Belt re-tensioning.

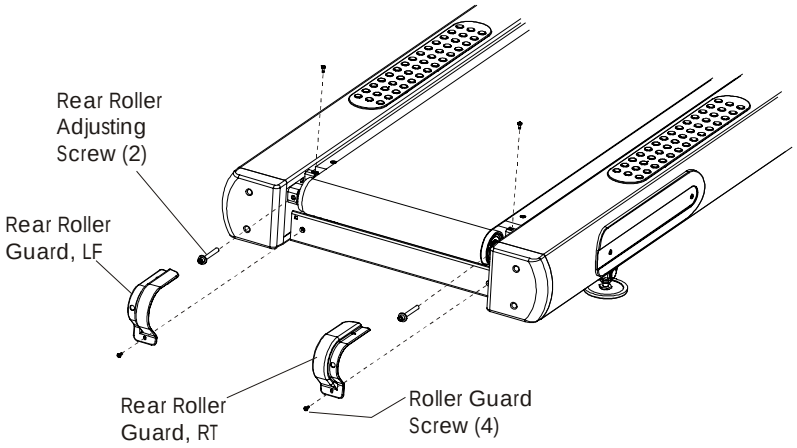


**Configuration No. 2**

5. Remove the Rear Roller out from under the Striding Belt just enough to mark the end of the shaft so that it can be re-installed in the same way to maintain the same bearing wear pattern. Using a felt-tip marker, mark the letter “R” on the right end of the shaft.

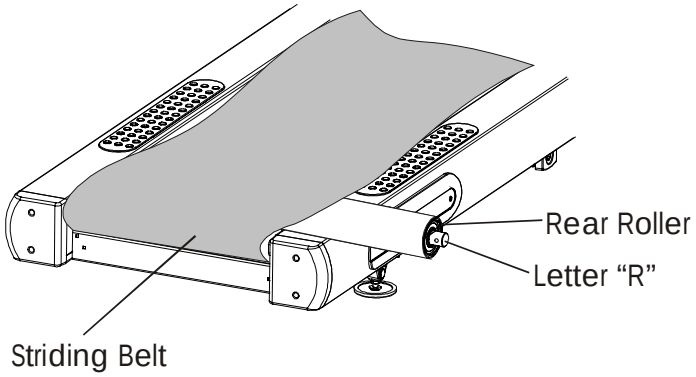

# How To... Replace the Striding Belt and Deck - Continued

**Special Service Tools Required: NONE**

6. Remove four Deck screws, one at each corner of the deck, and then remove the Deck out from under the Striding Belt.

Note: If applicable, be careful not to scrape off wax on unused surface.

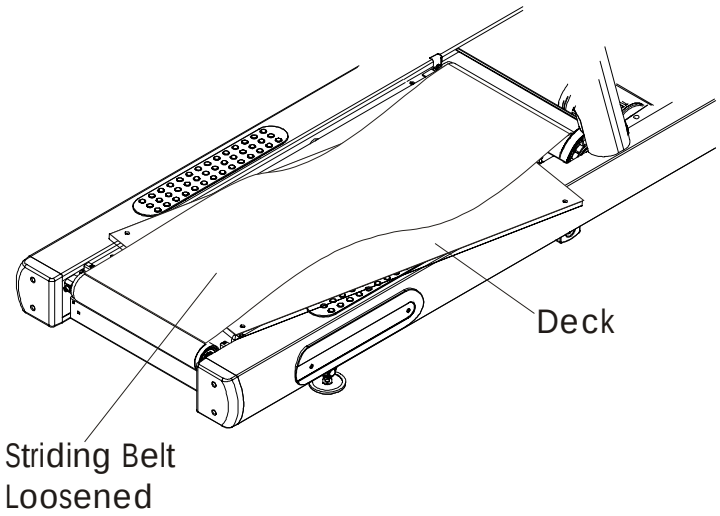


7. Remove two screws securing the Anti-Static Brush Bracket just behind the Front Roller Pulley to avoid being damaged during roller removal.

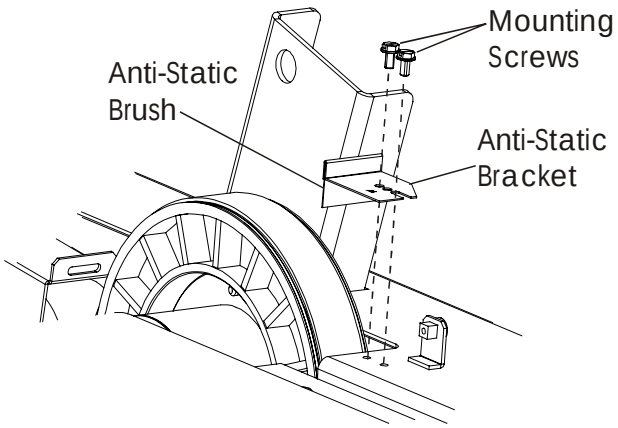

# How To... Replace the Striding Belt and Deck - Continued

**Special Service Tools Required: NONE**

8. Insert a flat blade screwdriver into the slotted end of the Idler Arm. Raise the Idler Arm just enough to install an Allen wrench into the access hole of the Idler Arm to keep it in a raised position.

**CAUTION: DUE TO EXTREME SPRING TENSION, DO NOT RAISE THE IDLER ARM ANY HIGHER THEN NECESSARY.**

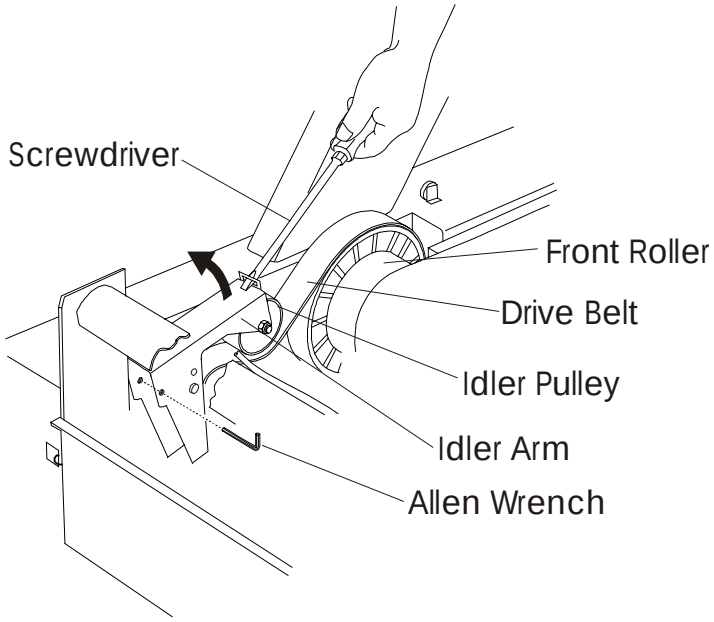


9. Remove the mounting bolt, lock washer, and flat washer securing the Front Roller Shaft at the left side of the Frame.

Note: Illustration shows Striding Belt removed for purposes of clarity.

10. Move the left end of the Front Roller Shaft into the left side of the Frame.

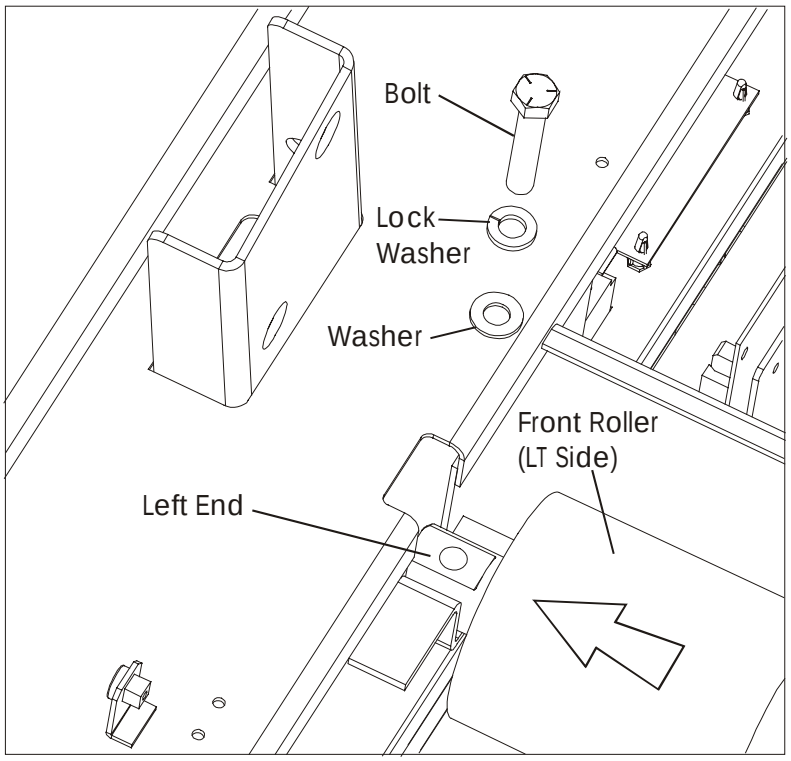

# How To... Replace the Striding Belt and Deck - Continued

**Special Service Tools Required: NONE**

11. With the Left End of the Shaft moved into the Left Side of the Frame, the Right End of the Front Roller should clear the Access Hole in the Right Side Frame. At this time, remove the Motor Drive Belt from the Front Roller Pulley.

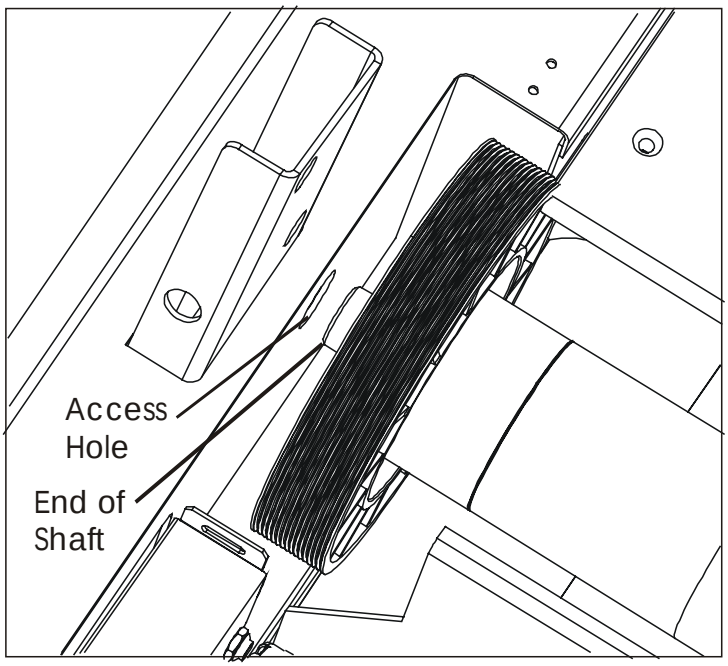


Right End of Front Roller as Viewed From Front of Unit

12. Remove the Front Roller out from under the Striding Belt.

Note: For clarity purposes, the Console and Uprights have been removed.

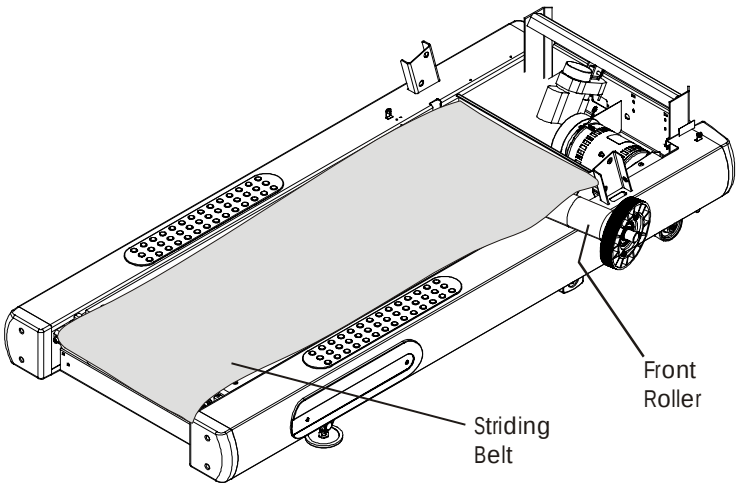

# How To... Replace the Striding Belt and Deck - Continued

**Special Service Tools Required: NONE**

13. Move the Striding Belt aside to gain access to the Wax Bracket mounting screws. Remove the Wax Bracket mounting screws and lay the Wax Bracket out of the way, and also remove the Anti-Static Tinsel.

Note: Do not disconnect the Wax Hose from the Wax Nozzle assembly.

14. With the rollers removed, the tinsel removed, and the wax bracket placed out of the way, remove the Striding Belt from the Frame and discard.

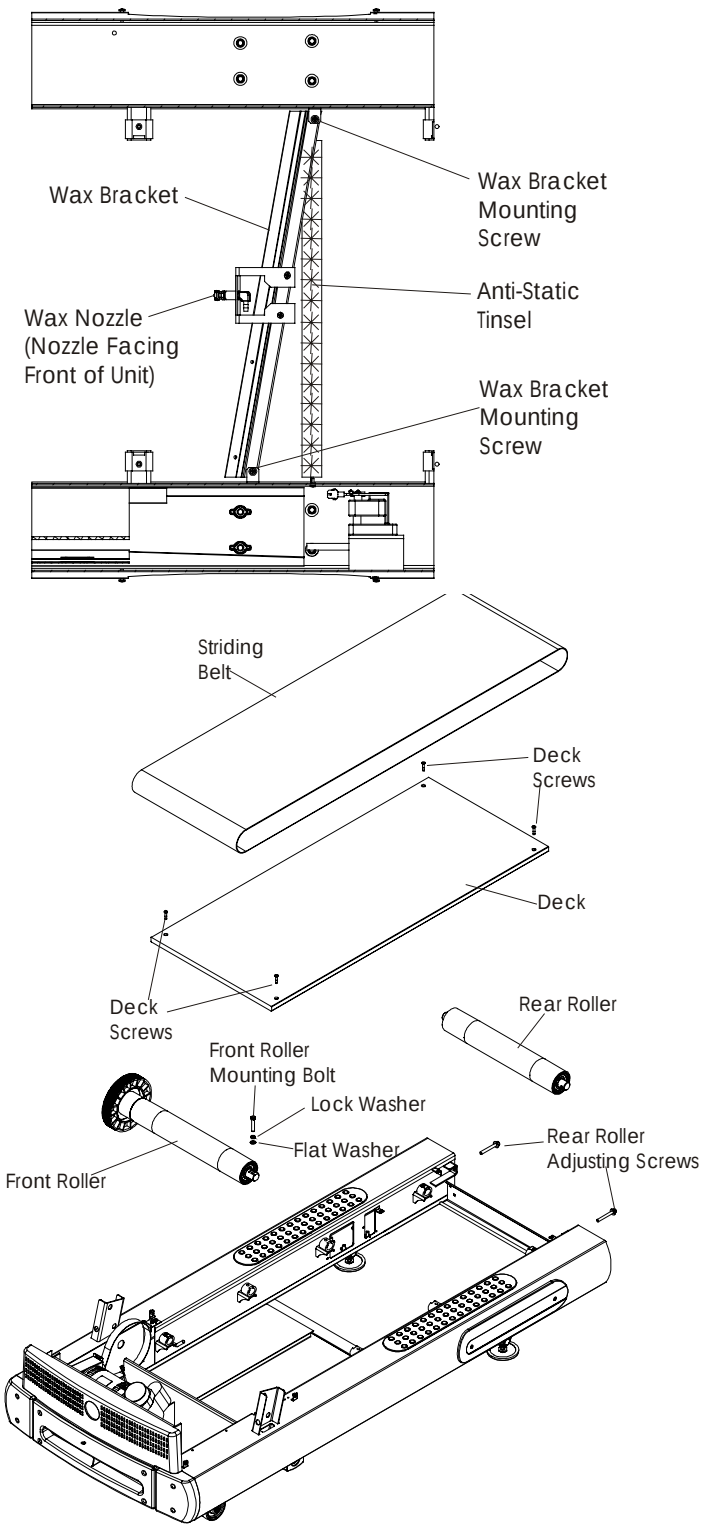


**STRIDING BELT INSTALLATION**

Note: Use the exploded view to aid in re-assembly and installation of treadmill components.

1. Position the new striding belt inside the unit.

Note: Make sure that the arrow on the inside of the belt points in the direction of belt rotation.

2. With the Striding Belt back in the unit, re-secure the wax Nozzle Bracket back onto the frame.

3. Replace the Anti-Static Tinsel at this time, and install between the side frames.

4. Position the Front Roller under the Striding Belt and install the Motor Drive Belt back on the Front Roller Pulley. Then place the Right Side Shaft in the Access Hole and secure the Left Side Front Roller Shaft with the mounting bolt and washers.

5. Install new Deck or flip the existing Deck. Secure the Deck with the four mounting screws.

6. Before installing the Rear Roller, remove any wax build-up on the roller. Position the Rear Roller under the Striding Belt. Make sure that the “R” identification mark at the end of the roller shaft is positioned accordingly for proper bearing wear.

7. Secure the Rear Roller Adjusting Screws by hand. DO NOT TIGHTEN THESE SCREWS AT THIS TIME. The belt should remain loose.

8. Adjust the Striding Belt. See “How To...” on the following pages.

9. After the Striding Belt is properly adjusted, reinstall the inside Upright Covers, Motor Cover, and Front Cover.

10. Refer to the Diagnostics Section to log-in maintenance repair of the striding belt.

# How To... Tension the Striding Belt

**Special Tools Required: NONE**

1. Center the new Striding Belt between the Front and Rear Rollers.

2. Adjust the Tensioning Bolts equally in ¼ turn increments, until the slack is taken out of the belt.

3. Place two pieces of tape, 50” apart, on the right and left side edges of the Striding Belt.

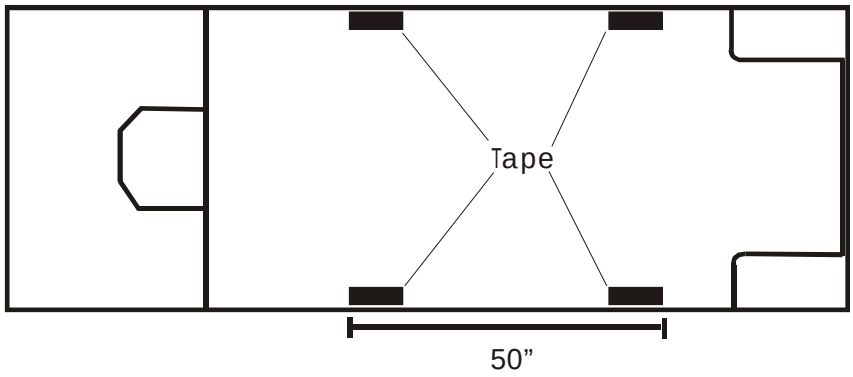


4. Continue to tighten the Tensioning Bolts (see Step 2) until the distances between the tapes are increased to 50.25”. At this point, the belt is stretched to proper tension.

5. Re-assemble remaining components in reverse order of removal.

6. Adjust the Striding Belt Tracking. See How To...Adjust Striding Belt Tracking in this section.

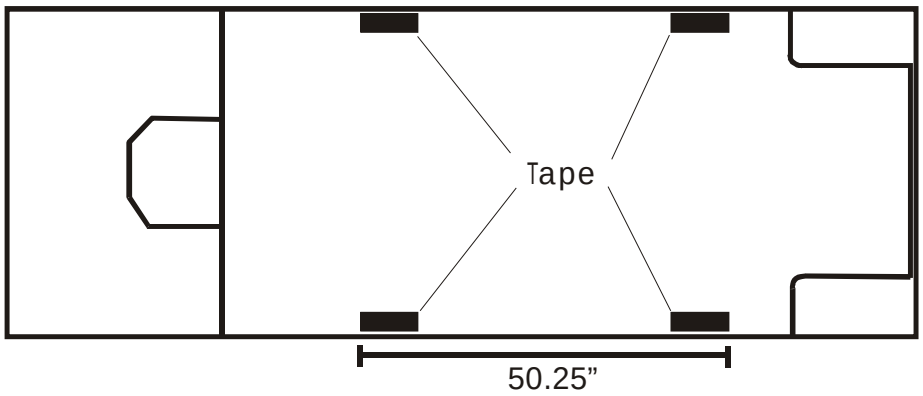


7. Refer to Diagnostics Section to Log Maintenance Repair of the Striding Belt.

# How To... Adjust Striding Belt Tracking

**Special Service Tools Required: NONE**

**IMPORTANT**: ***It is CRITICAL that the treadmill be correctly leveled prior to any tracking adjustments. An unstable unit can cause Striding Belt misalignment. To level and stabilize the unit, refer to instructions on "How To…Replace The Leveler Assembly" in this section.***

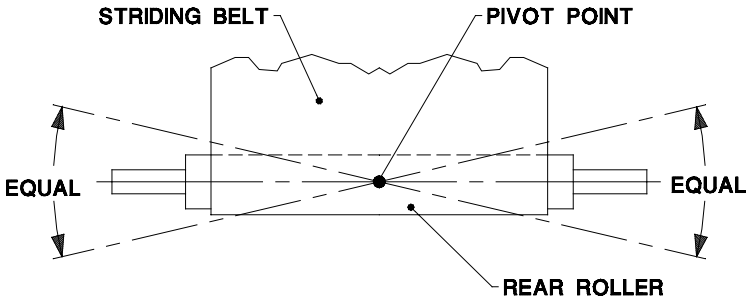


1. After the treadmill has been installed and leveled, the belt must be checked to confirm proper tracking.

2. Turn the unit ON and set the main motor speed to 2.5 mph.

NOTE: Refer to SYSTEM TEST MENU for Main Motor Test selection and SPEED AUTOMATIC MODE on how to set its speed in Section 2 of this manual.

3. With the belt operating at specified speed, note its tracking. If the belt moves to the right, turn the right tensioning bolt 1/4 turn counterclockwise to bring the belt back to center. If the belt moves to the left, turn the left tensioning bolt 1/4 turn clockwise and then turn the right tension bolt 1/4 turn counterclockwise to bring the belt back to center.

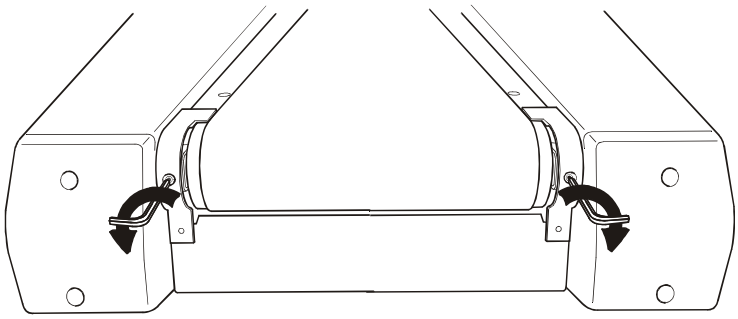

If the STRIDING BELT has moved to the **right**, turn the right TENSION BOLT 1/4 turn clockwise and the left TENSION BOLT 1/4 turn counter-clockwise to start the STRIDING BELT tracking back to the center of the REAR ROLLER.

If the STRIDING BELT has moved to the **left**, turn the left TENSION BOLT 1/4 turn clockwise and the right TENSION BOLT 1/4 turn counterclockwise to start the STRIDING BELT tracking back to the center of the REAR ROLLER.

4. Repeat this adjustment until the Striding Belt appears centered between rollers. Allow the unit to operate for several minutes to see that the belt remains centered.

NOTE: During the adjustment above, DO NOT exceed one full turn of the Adjusting Screws in either direction.

# How To… How to Adjust Striding Belt Tension (Stall Test)

**Special Service Tools Required: NONE**

1. Locate the two Belt Tensioning Bolts on each side of the Rear Roller Mounting Brackets. The Tensioning Bolts are accessible from the holes provided in the Rear Roller Guards.

2. Enter the Manual program and run unit for five minutes at 5.0 mph (8.0 km/h). ***DO NOT RUN*** on the Belt.

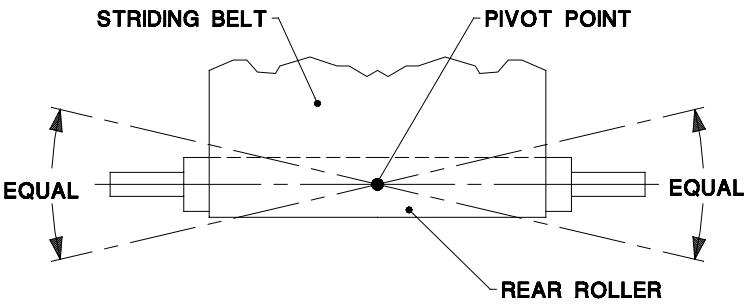


3. Press the down arrow speed ∇; button to decrease Striding Belt speed to 2 mph (3.2 km/h). Begin walking on the treadmill. Tightly grasp the Handrails and attempt to stall the Striding Belt. If it slips, proceed to Step 4. **I**f it does not slip, proceed to Step 5.

4. Stop the treadmill and increase belt tension by turning the Tensioning Bolts clockwise in 1/4-turn increments. Once the belt is properly tensioned, proceed to Step 5.

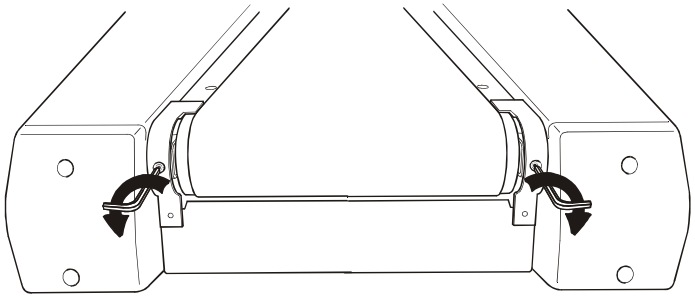

5. With the belt running, note its tracking (centering). If the belt moves to the right, turn the right Tensioning Bolt 1/4 turn counterclockwise to bring the belt back to center. If the belt moves to the left, turn the left Tensioning Bolt 1/4 turn clockwise and then turn the right tension bolt 1/4 turn counterclockwise to bring the belt back to center. Repeat this adjustment until the striding belt is centered. Allow the unit to operate for several minutes after each adjustment to see that the belt remains centered.

   **NOTE: Make adjustments in 1/4 turn. DO NOT exceed one full turn of the Adjusting Screws.**

# How To... Replace the Drive Motor Belt

**Special Service Tools Required: NONE**

1. Turn the unit power OFF at the Switch, and then unplug the line cord at the wall outlet.

2. Remove the inside Upright Covers, Front Cover, and Motor Cover. See “How To,,,” in this section.

3. Loosen the Rear Roller Adjusting Screws to slacken the Striding Belt enough to allow side-to-side movement of the Front Roller.

Note: Index the initial position of the Adjusting Screw or count the number of rotations when loosening the Roller Adjusting Screws for proper Striding Belt re-tensioning.

4. Remove two screws securing the Anti-Static Brush Bracket just behind the Front Roller Pulley to avoid being damaged during roller removal.

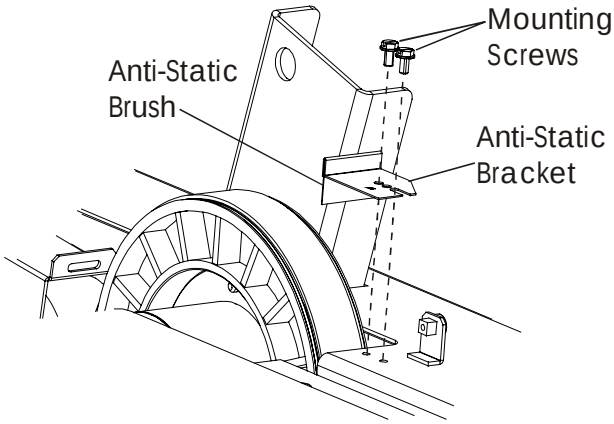


5. Remove the mounting bolt securing the end of the Front Roller Shaft on the left side of the Frame.

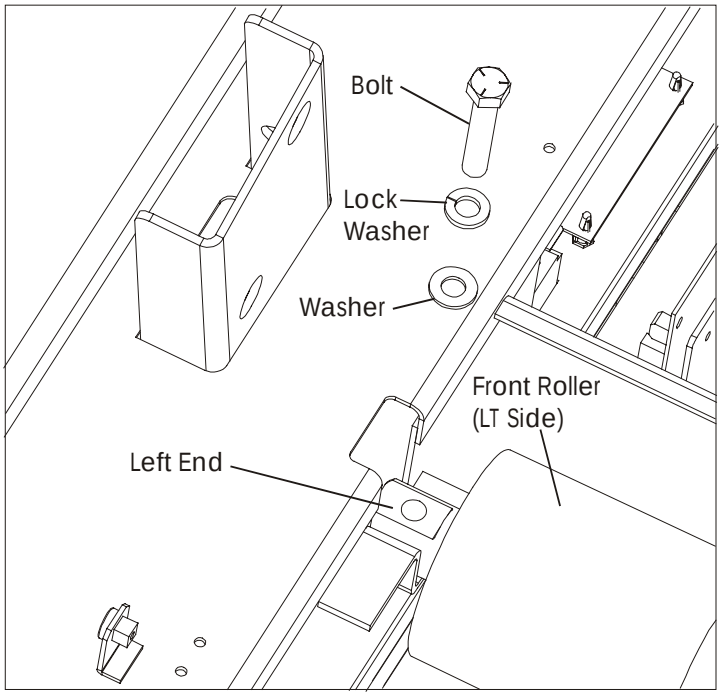


Left Side of the Unit Frame

6. Loosen the tension on the Drive Motor Belt by inserting a flat blade screwdriver into the slotted end of the Idler Arm. Raise the Idler Arm just enough to install an Allen wrench into the Access Hole in the Idler Arm to keep it in a raised position.

**CAUTION: DUE TO EXTREME SPRING TENSION, DO NOT RAISE THE IDLER ARM ANY HIGHER THAN NECESSARY.**

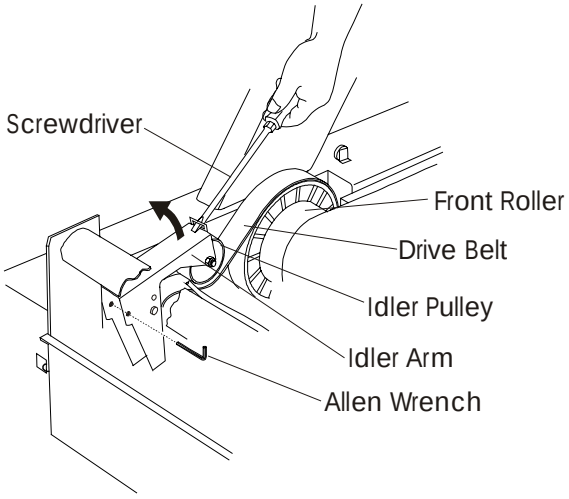

# How To... Replace the Drive Motor Belt - Continued

**Special Service Tools Required: NONE**

7. Move the left side of the Front Roller Shaft end into the left side of the Frame so that the Pulley Shaft end clears the Access Hole in the right side.

8. Remove the old Drive Belt from the Front Roller Pulley and Motor Pulley.

9. Install a new Drive Motor Belt in the reverse order.

10. Re-tension the Striding Belt. See “How To…” in this section.

11. Re-install Covers.

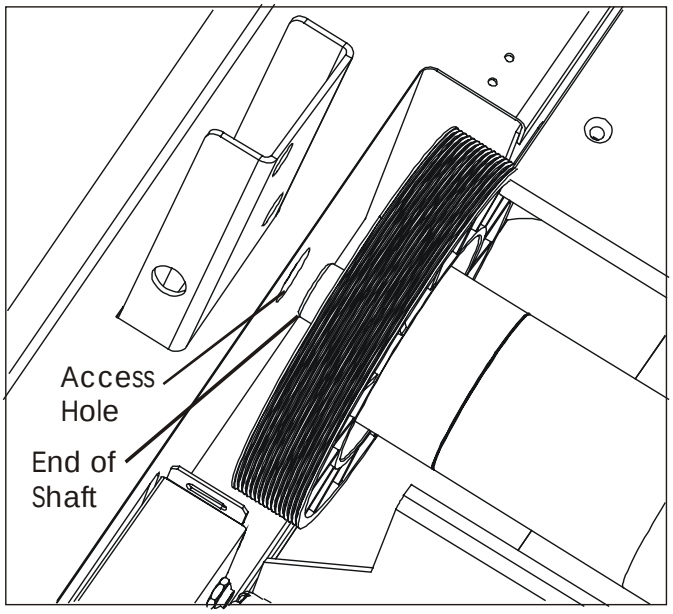


Right End of Front Roller as Viewed From Front of Unit

# How To... Replace the Drive Motor

**Special Service Tools Required: NONE**

Note: The Drive Motor weighs approximately 50lbs. It is also in close proximity to other components. Therefore, care should be taken when lifting out the Motor not to injure yourself or bang the Motor up against these components.

1. Turn the unit power OFF at the switch, and then unplug the line cord at the wall outlet.

2. Remove the inside Upright Covers, the Front Cover, and the Motor Cover. See “How to…” in this section.

3. Disconnect two Cable Connectors from the Motor, or disconnect the 3-Pin and 5-Pin Connectors between the Motor and Motor Controller.

4. Loosen the tension on the Drive Motor Belt by inserting a flat blade screwdriver into the slotted end of the Idler Arm. Raise the Idler Arm just enough to install an Allen wrench into the Access Hole of the Idler Arm to keep it in a raised position.

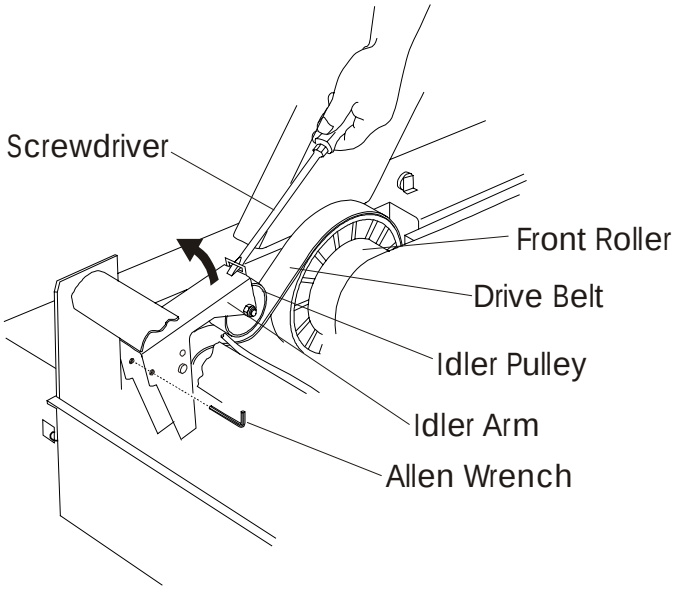


**CAUTION: DUE TO EXTREME SPRING TENSION, DO NOT RAISE THE IDLER ARM ANY HIGHER THAN NECESSARY.**

5. Remove the four Lock Nuts, Flat Washers, and Insulating Washers from the Motor Studs.

Note: The Motor weighs close to 50 lbs. Before proceeding to the next step, make certain that this weight can be handled.

6. Initially lift the Motor off its studs. Then move the Drive Motor in towards the Left Side of the Frame to allow added clearance between the Pulley and Lift Motor. Then tilt the Pulley end up first, and continue to lift out the Motor at this angle. Once the motor is out, remove the Insulating Pad under the Motor Plate.

Note: Illustration shown, is without a number of drive and unit components for clarity purposes.

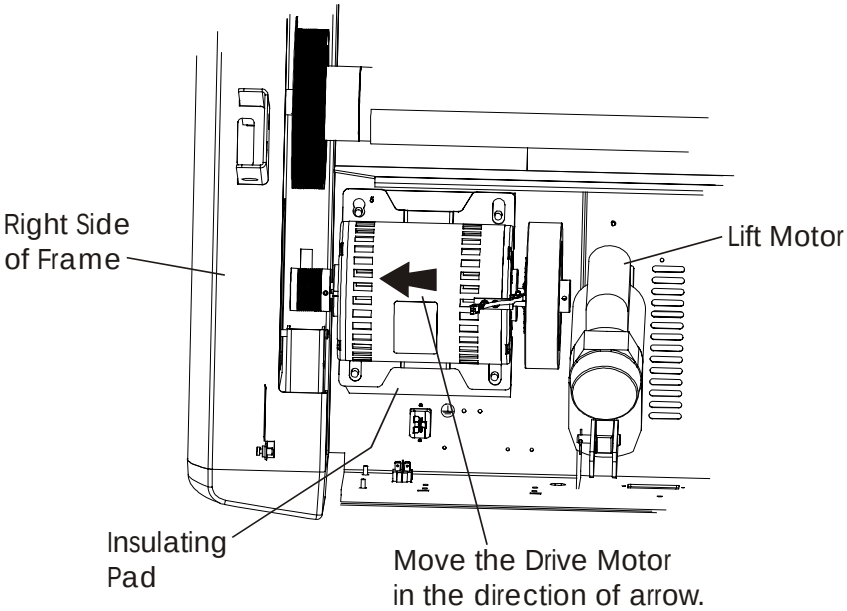

# How To... Replace the Drive Motor - Continued

**Special Service Tools Required: NONE**

7. With the Motor out of the unit, remove the Flywheel and the Poly-V Pulley, which are held on by Set Screws. Keep these components and all hardware together for the new Motor.

8. Install the new Motor in reverse order making sure to install the Flywheel with Square Key back on the new Drive Motor shaft. Then apply LOCTITE® 242 on the Set Screw threads and tighten Flywheel position.

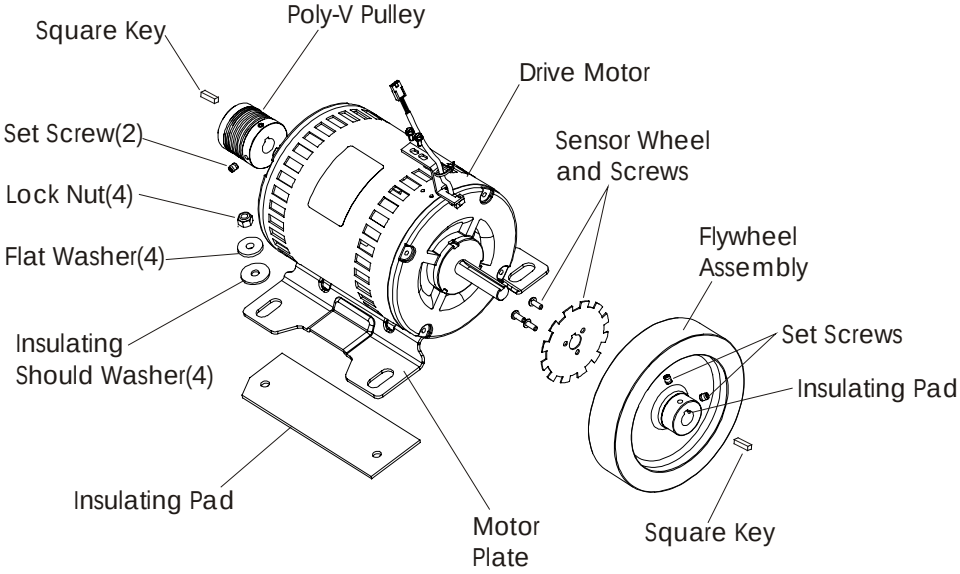


9. Install the Poly-V Pulley onto the Motor Shaft. Then install Set Screws without LOCTITE®242 until after the Pulley has been aligned.

10. Install the new Motor, reconnect the Drive Belt, and reconnect all connectors to the Motor Controller.

**POLY-V PULLEY ALIGNMENT**

1. Check that the outer face of the Poly-V Pulley is in alignment with the outer face of the Front Roller Pulley. Use a straight edge to achieve alignment. To adjust move the Poly-V Pulley in or out on the shaft, and then tighten one of the two Set Screws. Remove the other Set Screw and apply LOCTITE® 242 on its threads and secure back into the Pulley. Remove the other Set Screw without LOCTITE® 242 and repeat LOCTITE application.

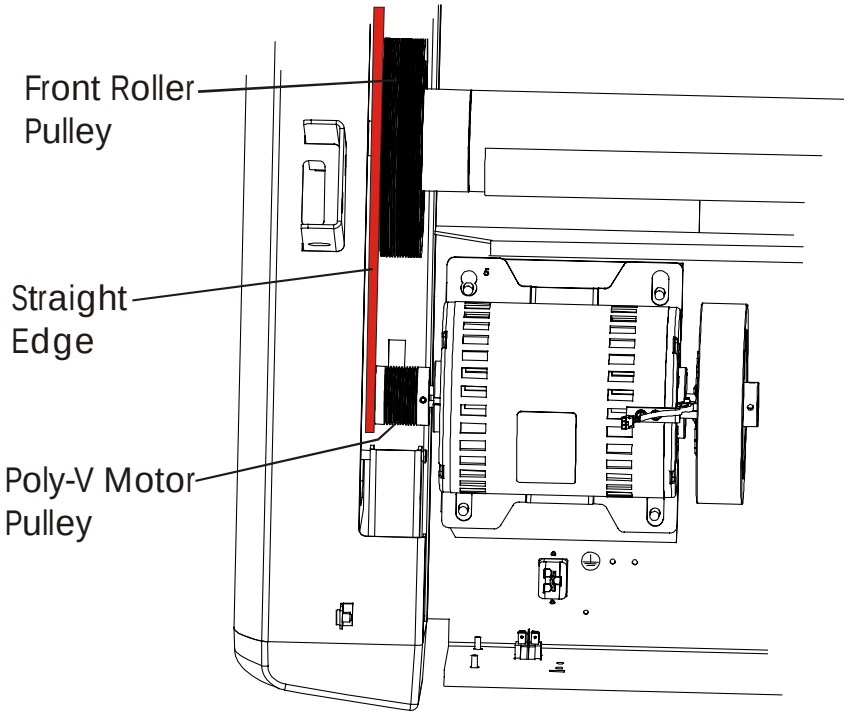


2. Before releasing the Idler Tensioning Arm, make sure that the Drive Belt is positioned on the far left Poly-V Pulley groves.

3. Reinstall the Motor Cover, Front Cover, and inside Upright Covers.

4. Refer to Diagnostics Section to Log Maintenance Repair of the Drive Motor.

# How To... Replace the Drive Motor OPTO Sensor

**Special Service Tools Required: NONE**

1. Turn the unit power OFF at the switch, and then unplug the line cord at the wall outlet.

2. Remove the inside Upright Covers, the Front Cover, and the Motor Cover. See "How to…" in this section.

3. Cut the Tie Wrap from around the Bracket.

4. Remove two Mounting Screws securing the Bracket to the top of the Motor.

5. Lift out the OPTO Sensor from between the Flywheel Assembly and the Motor, and discard.

6. Install new OPTO Sensor in reverse order.

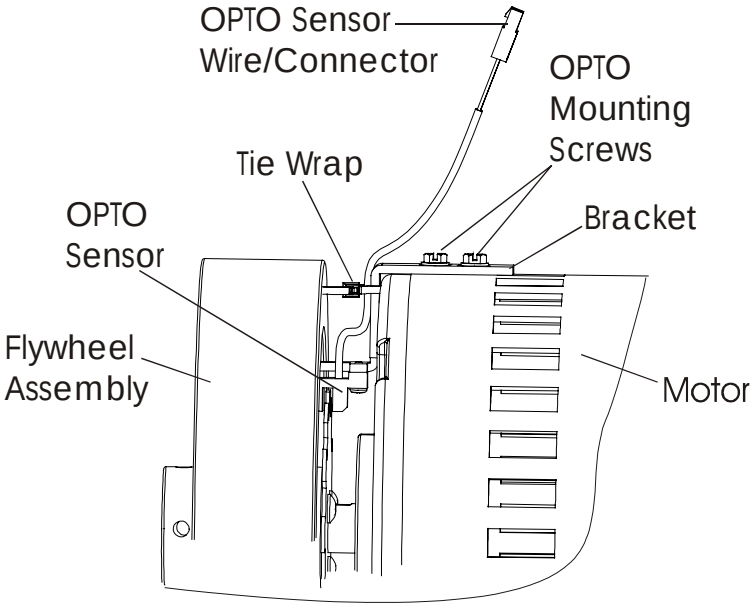

# How To... Replace the Front Roller

**Special Service Tools Required: NONE**

1. Turn the unit power OFF at the switch, and then unplug the line cord at the wall outlet.

2. Remove the Inside Upright Covers, the Front Cover, and the Motor Cover. See “How To…” in this section.

3. Loosen the Rear Roller Adjusting Screws to slacken the Striding Belt enough to allow side-to-side movement of the Front Roller.

Note: Index the initial position of the Adjusting Screw or count the number of rotations when loosening the Roller Adjusting Screws for proper Striding Belt re-tensioning.

4. Insert the end of a flat blade screwdriver in the slot of the Idler Arm. Raise the Idler Arm and insert an Allen wrench in the Idler Arm Access Hole to keep it in a raised position.

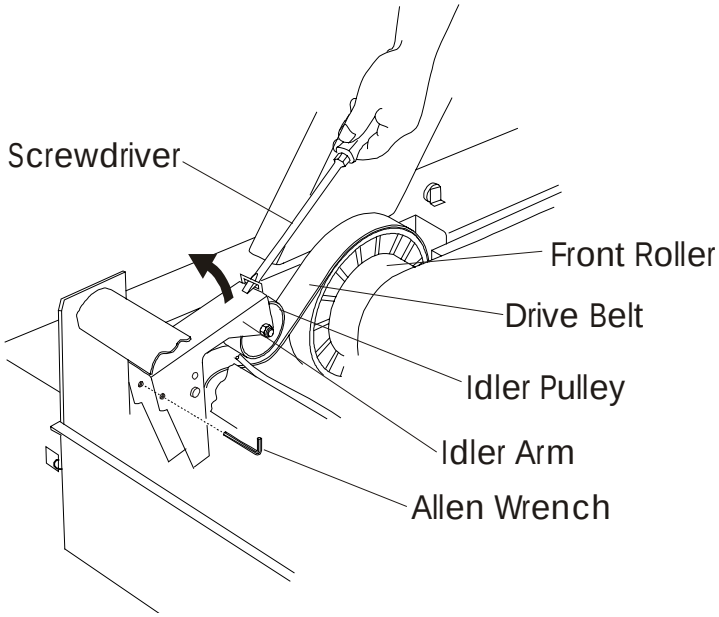


**CAUTION: DUE TO EXTREME SPRING TENSION, DO NOT RAISE THE IDLER ARM HIGHER THAN REQUIRED TO INSTALL THE ALLEN WRENCH.**

5. Remove two screws securing the Anti-Static Brush Bracket just behind the Front Roller Pulley to avoid being damaged during roller removal.

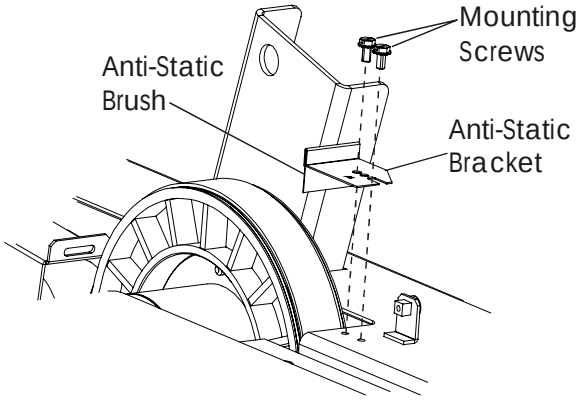


6. Remove the mounting bolt, lock washer, and flat washer securing the Left Front Roller Shaft at the Left Side of the Frame.

Note: Illustration shows striding belt removed for purposes of clarity.

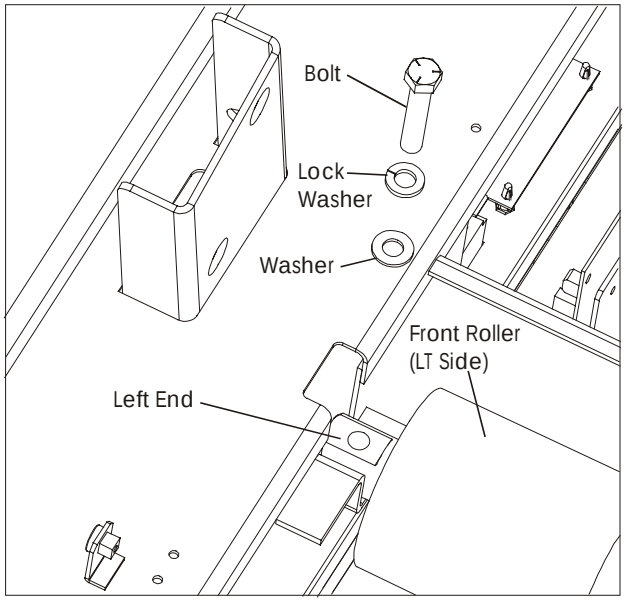


Left Side of the Unit Frame

# How To... Replace the Front Roller - Continued

**Special Service Tools Required: NONE**

7. Move the Left Front Roller Shaft end into the Left Side of the Frame so that the right side of the Pulley Shaft end clears the Access Hole in the right side of the frame to allow the Motor Belt clearance for removal. Slip the Motor Belt off the Front Roller Pulley at this time.

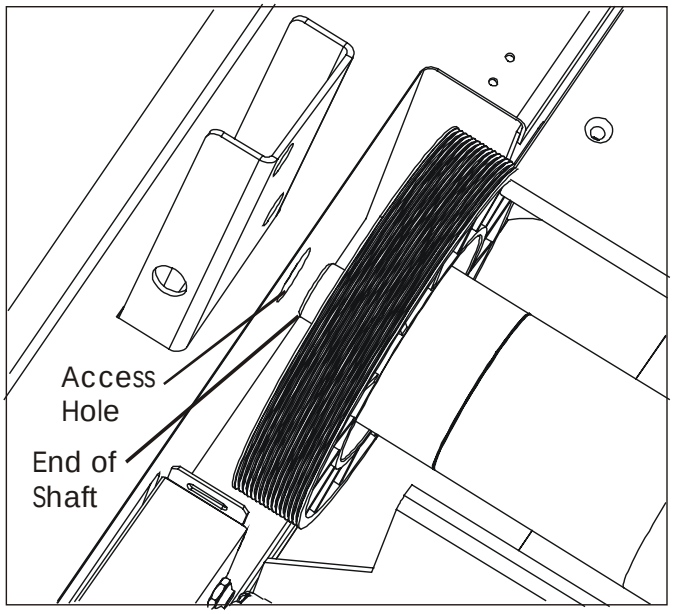


Right End of Front Roller as Viewed From Front of Unit

8. From the right side of the frame, remove the Front Roller out from under the Striding Belt.

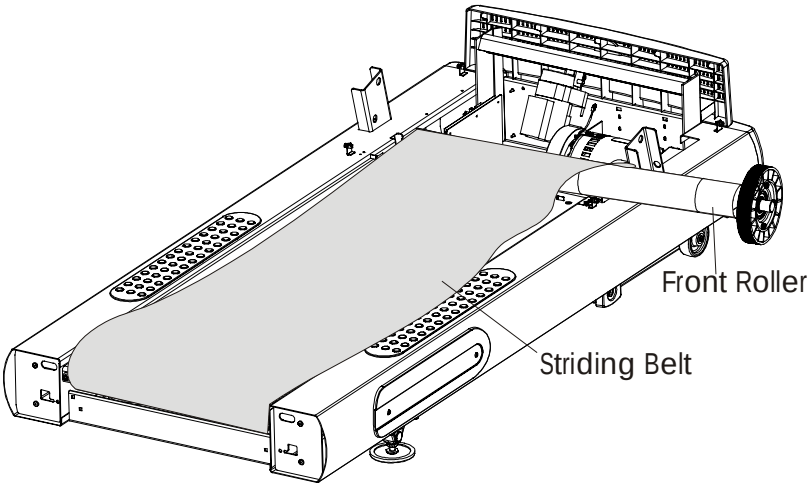

# How To... Replace the Front Roller - Continued

**Special Service Tools Required: NONE**

8. With the Front Roller out. Remove the Pulley and Hardware and save for the new Front Roller.

9. Install Pulley on the new Front Roller.

10. Install the Front Roller into position and secure in place with the mounting bolt, lock washer, and flat washer on the left side of the roller shaft.

11. Make sure that the Motor Drive Belt is positioned on left side groves of the Front Roller Pulley.

12. Lower the Idler Arm Roller against Drive Motor Belt.

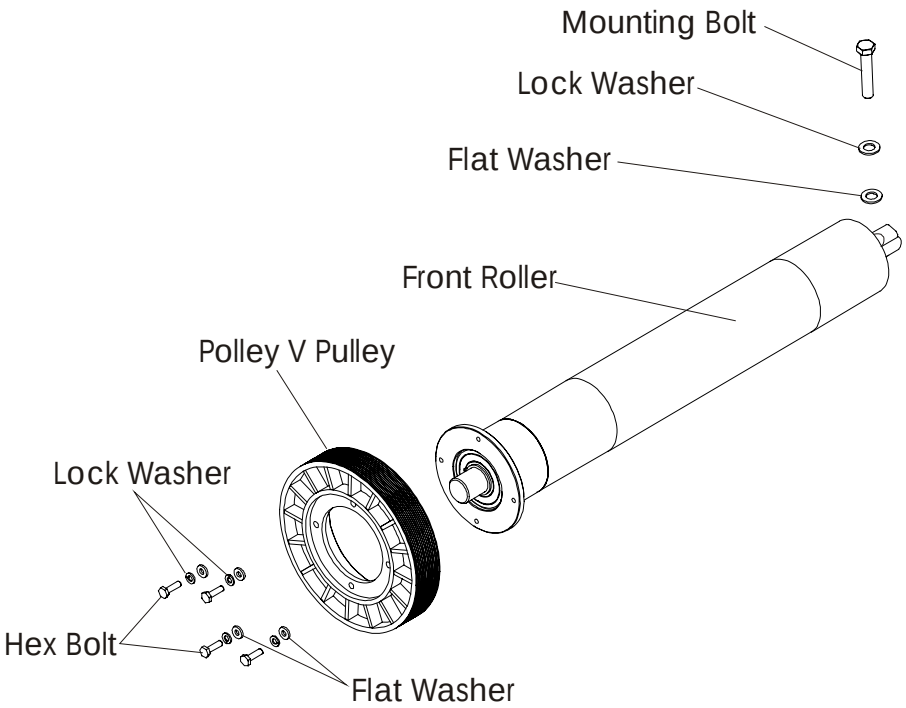


13. Refer to “How To…” Adjust Striding Belt Tracking or Tensioning in this section.

# How To... Replace the Rear Roller

**Special Service Tools Required: NONE**

1. Turn the unit power OFF at the switch, and then unplug the line cord at the wall outlet.

2. **Units with Configuration No 1:** Remove four screws securing the Roller Covers and Guards, and then remove the Roller Covers and Guards from the Rear Roller.

   **Units with Configuration No. 2:** Remove four screws securing Roller Guards, and remove the Roller Guards from the Rear Roller.

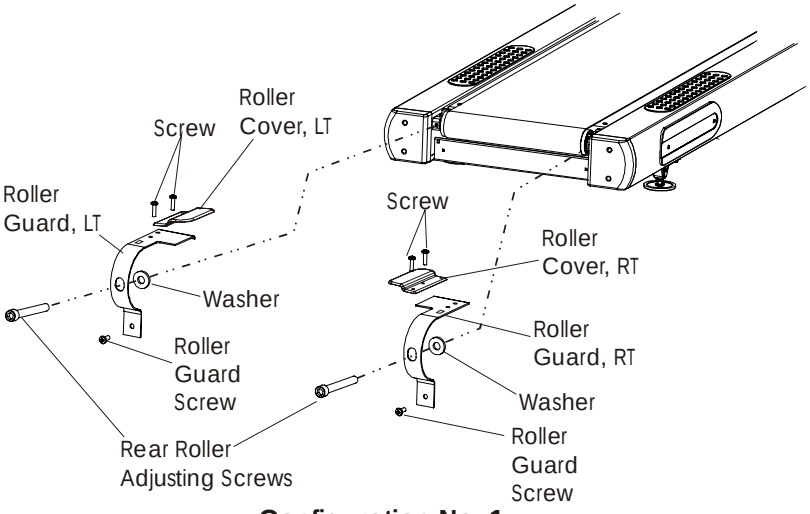


**Configuration No. 1**

3. Index the initial position of the Adjusting Screw or count rotations, and remove the Rear Roller Adjusting Screws. See “How to…” in this section.

4. Remove the Rear Roller out from under the Striding Belt and discard.

5. Install a new Rear Roller in the reverse order of removal.

6. Reinstall Tensioning Bolts back in the Rear Roller.

7. Refer to “How To…” Adjust Striding Belt Tracking or Tensioning in this section.

8. Reinstall the Rear Roller Guards and Covers.

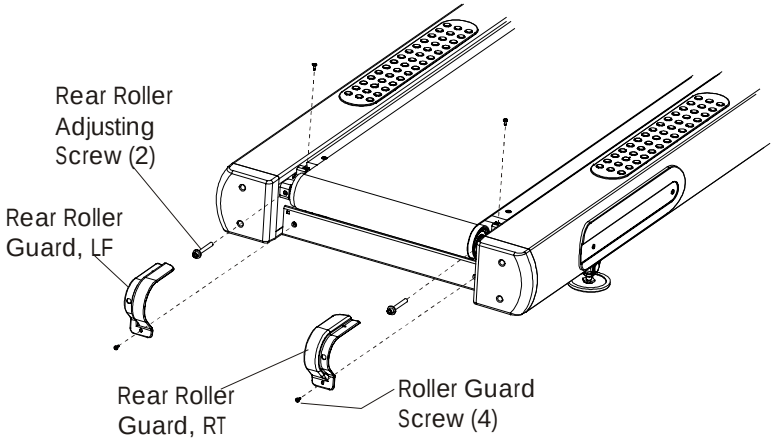


**Configuration No. 2**

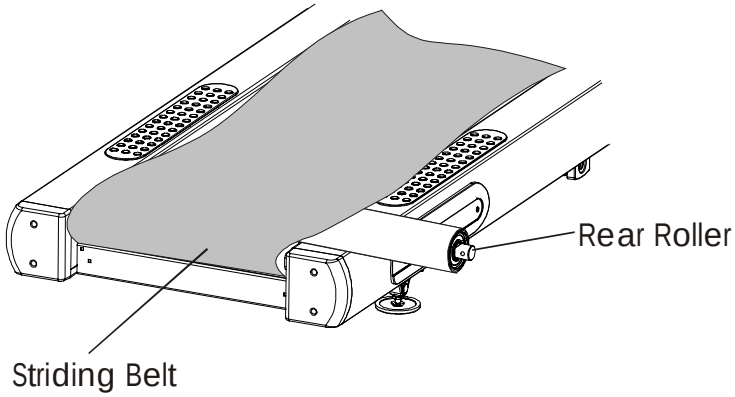

# How To... Replace the Rear Roller Guards

**Special Service Tools Required: NONE**

**NOTE: The following steps are applicable to units with Configuration No. 1, Rear Roller Guards.**

1. Remove the Screws securing the Rear Roller Guard Assembly to the Frame.

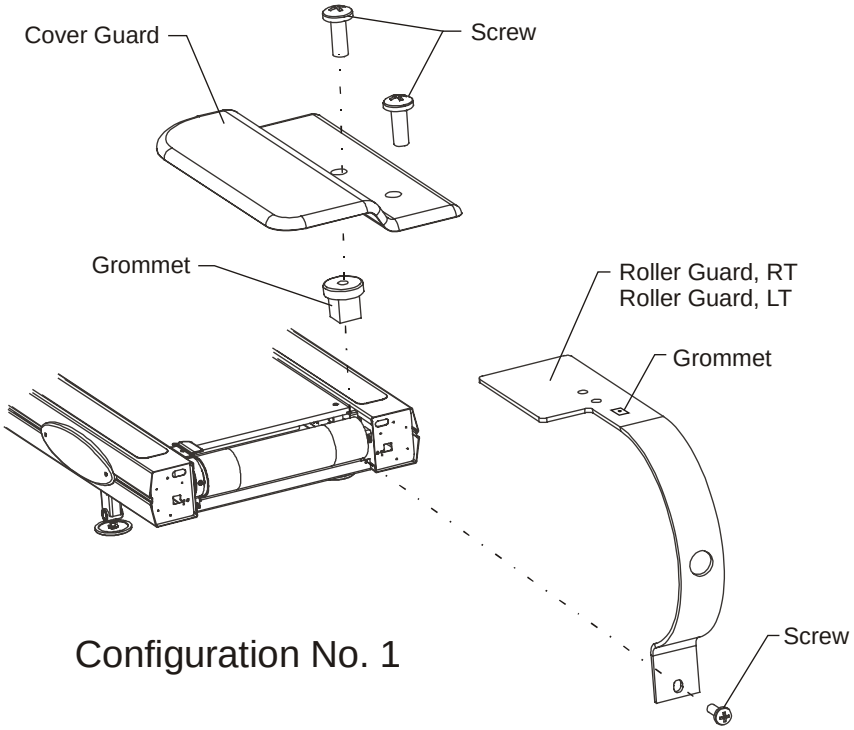


2. Remove the old Grommets from the Rear Roller Welded Guard Tab and Base Frame (model specific).

3. Install the new Grommets (included in kit) in the Rear Roller Guard Weldment and Base Frame locations. For the base frame holes, be sure to use the Low Profile Grommets.

4. Place new Roller Guard in position as shown with the top surface under walking belt. Align mounting holes.

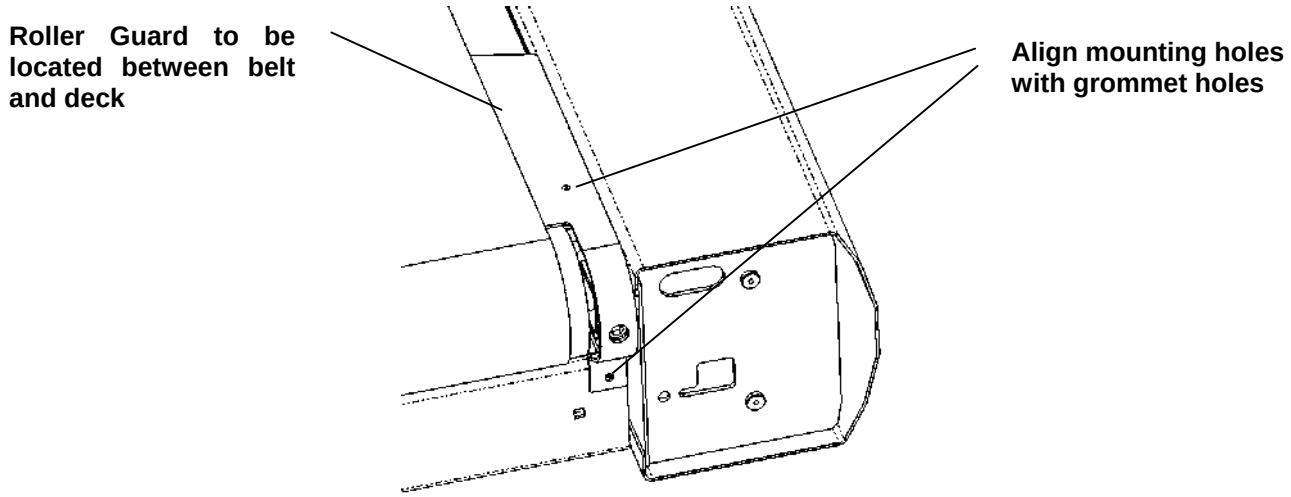

# How To... Replace the Rear Roller Guards

**Special Service Tools Required: NONE**

5. Install Screws and fasten securely. Approx. 22-37 in/lbs.

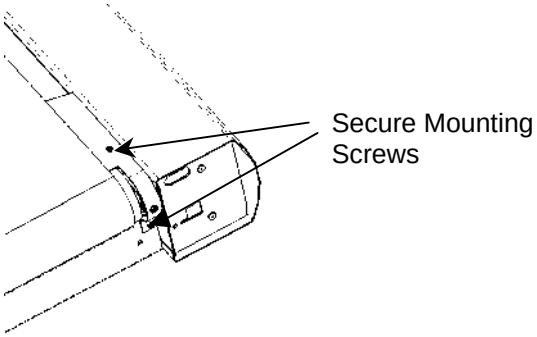


6. Repeat steps for opposite side. After completion run treadmill and check for interference or binding. If needed loosen Mounting Screws, re-align Guard, and refasten securely.

# How To... Replace the Rear Roller Guards

**Special Service Tools Required: NONE**

**NOTE: The following steps are applicable to units with Configuration No. 2, Rear Roller Guards.**

**1.** Remove existing Roller Guard by unscrewing mounting screws on top and base of frame.

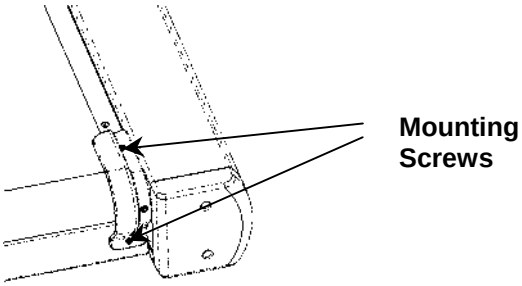

**2.** With flat blade screwdriver, remove Grommet and Washer, discard old washer and re-install the grommet. Use caution to prevent injury or damage to paint.

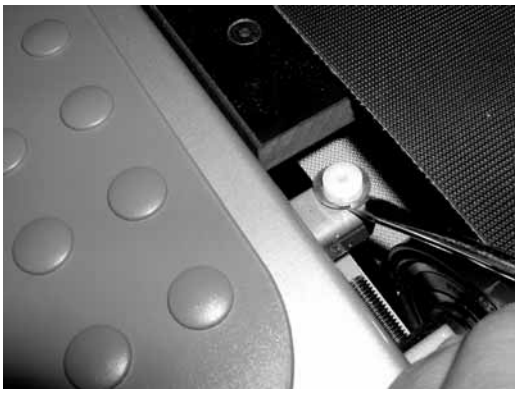

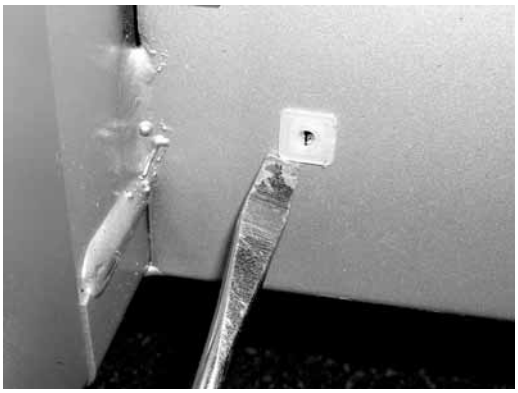

**NOTE: Do not replace washer**. **Having a washer and the grommet will raise the guard too high and cause rubbing against the belt resulting in premature wear and reducing belt life.**

**3.** Remove the Base's Low Profile Grommet for the base bottom hole and move it to the upper hole in the Base Frame.

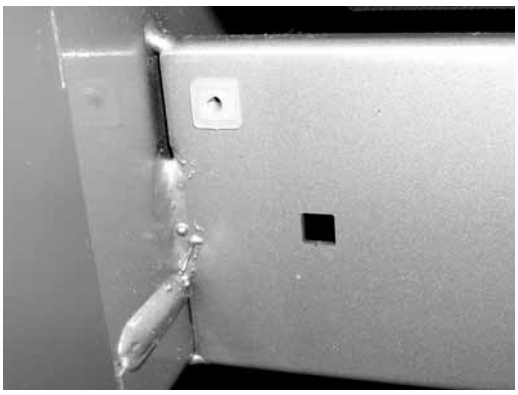

# How To... Replace the Rear Roller Guards

**Special Service Tools Required: NONE**

**4.** Place new Roller Guard in position shown with top surface under walking belt. Align mounting holes.

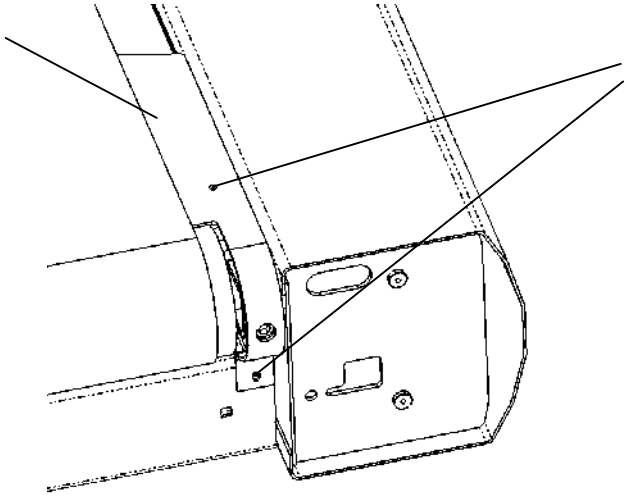


**5.** Install Screws and fasten securely. Approx. 22-37 in/lbs.

**6.** Repeat steps for opposite side. After completion run treadmill and check for interference or binding. If needed loosen Mounting Screws, re-align Guard, and refasten securely.

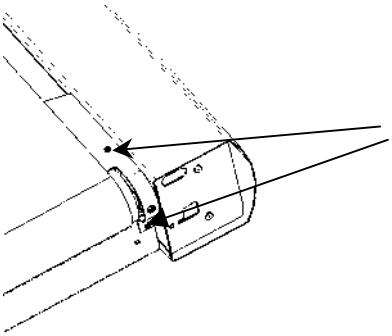

## Life Fitness Model 97Ti, 95Ti, 93T, 97Te, and 95Te Treadmills

# How To... Replace the Lifespring Absorbers

**Special Service Tools Required: NONE**

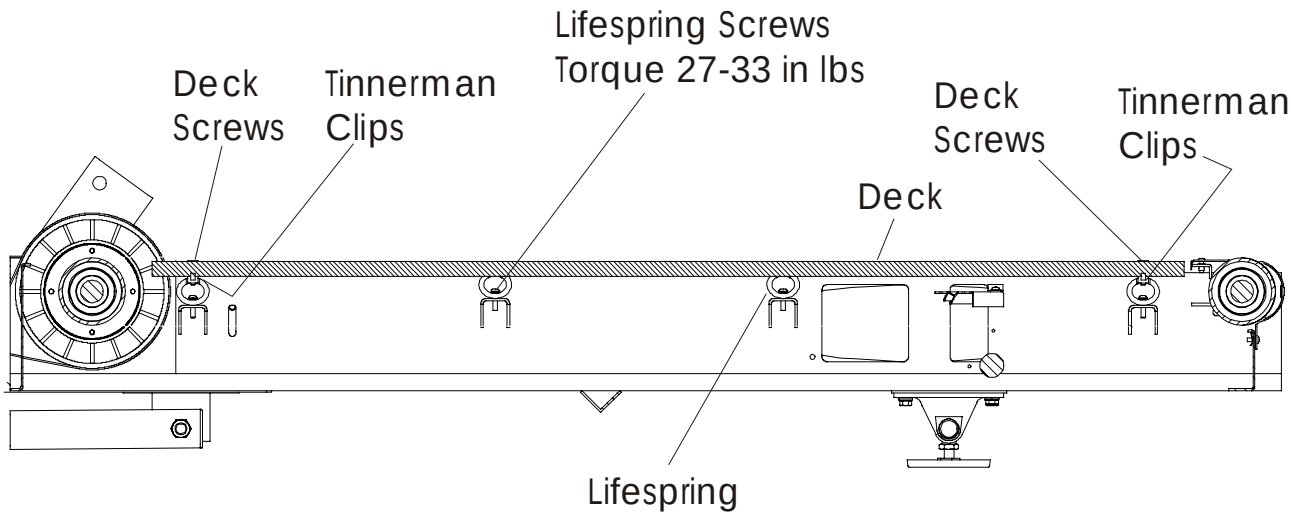


1. Turn the unit power OFF at the switch, and then unplug the line cord at the wall outlet.

2. Remove the Inside Upright Covers, Motor Cover. See “How to…” in this section.

3. Loosen the Rear Roller Tensioning Bolts so that the Striding Belt is loose enough for Deck removal.

4. Remove the Deck Screws (one at each corner of the deck).

5. Lift out the Deck from under the Striding Belt. Be careful not to disturb the unused waxed surface.

6. Remove the four Tinnerman clips and keep for the new Lifesprings.

7. Remove the eight Lifespring screws and Lifesprings from the frame. Discard Lifesprings, but save the hardware.

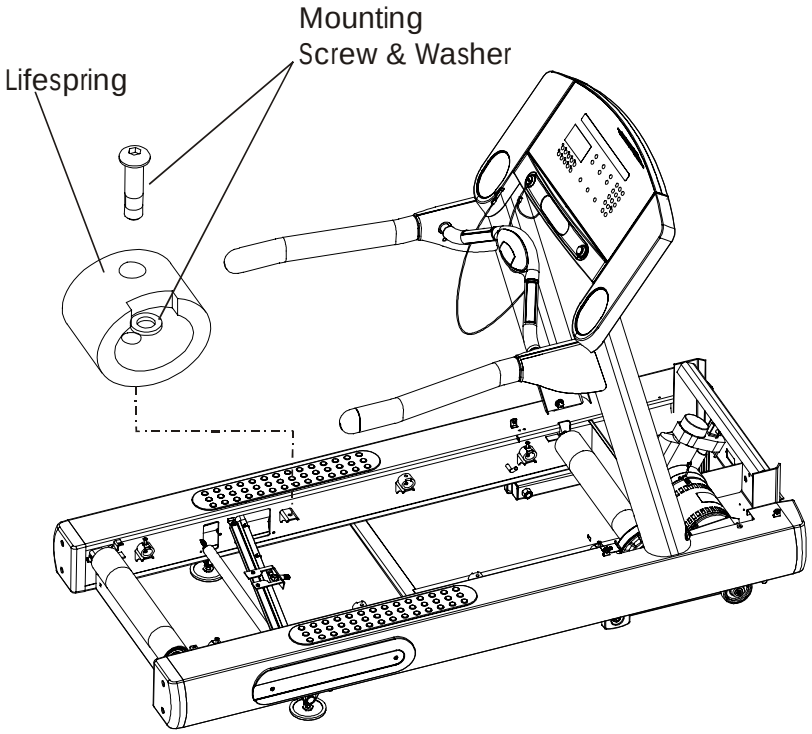


8. Install new Lifesprings making sure to face each notch in the Lifesprings towards the inside of the frame. Torque 1/4-20 screws to 27-33 in lbs.

9. Re-install the Tinnerman clips on the Lifespings at each corner of the unit.

10. Re-install Deck and secure with the deck screws at each corner of the deck.

11. Re-install the Motor Cover, the Front Cover, and the Inside Upright Covers.

12. Refer to “How To…” Adjust Striding Belt Tracking or Tensioning in this section.

# How To... Replace the Anti-Static Tinsel

**Special Service Tools Required: NONE**

1. Turn the unit power OFF at the switch, and then unplug the line cord at the wall outlet.
2. Remove the Left and Right Access Covers from the frame.
3. Reach in on the right side unclip the Anti-Static Tinsel from the frame.
4. Remove the one screw securing the Tinsel on the left side of the frame.
5. Discard the Tinsel.
6. Install new Anti-Static Tinsel.
7. Reinstall the Access Covers.

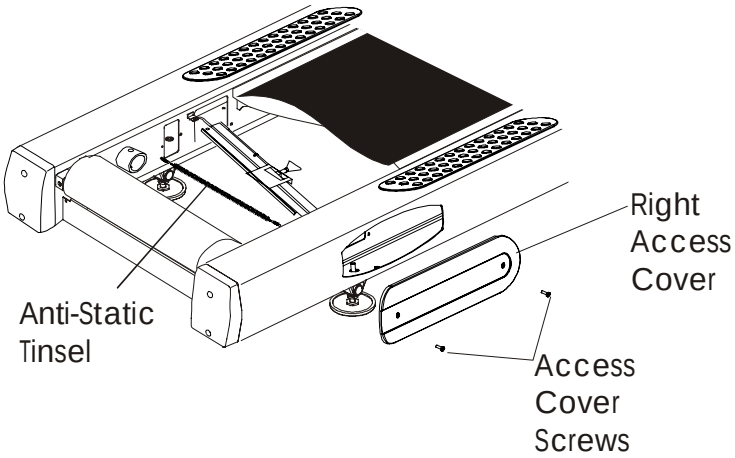

# How To... Replace the Anti-Scuff Pads

**Special Service Tools Required: NONE**

Note: Anti-Scuff Pad adhesive can take up to 24 hours to cure.

1. Remove current Anti-Slip Pads from the treadmill by carefully lifting the front and rear edges. Be careful not to scratch the paint during this operation.

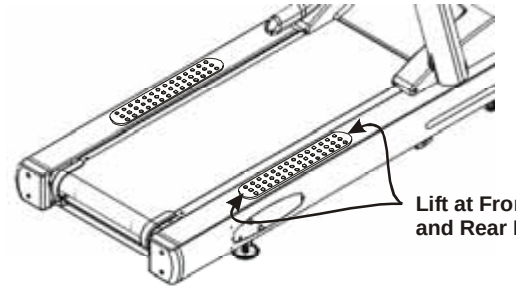


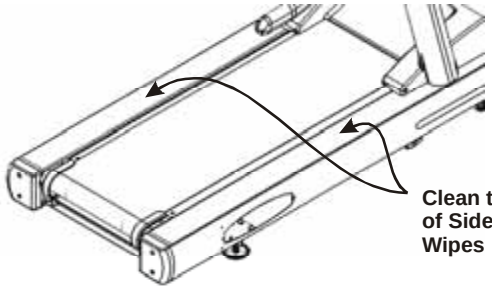


2. After removing the old Anti-Slip Pads, remove any remaining residue with a non-metallic scraper. Clean the entire top surface of the side rails with the cleaning wipes provided.

3. Location of the new Anti-Slip Pads is 3/4" from the inside face and 1 3/4" from the rear edge of the frame. Use the included templates for more accurate positioning of the Anti-Slip Pads.

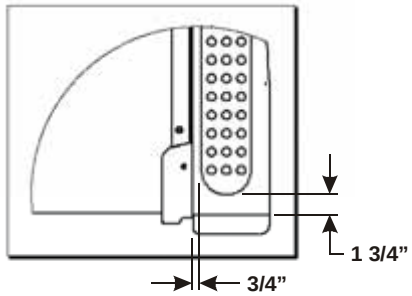


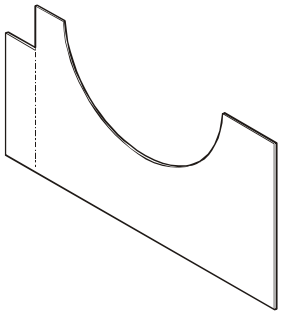

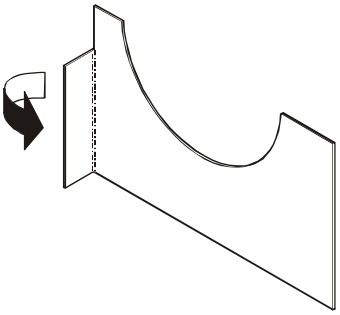

4. Fold the templates along scored lines as shown. Fold two templates as shown and two templates in the opposite direction.

5. Position one template at the rear of the side rail as shown (Removal of roller guard might be required). Tape the template in place as needed.

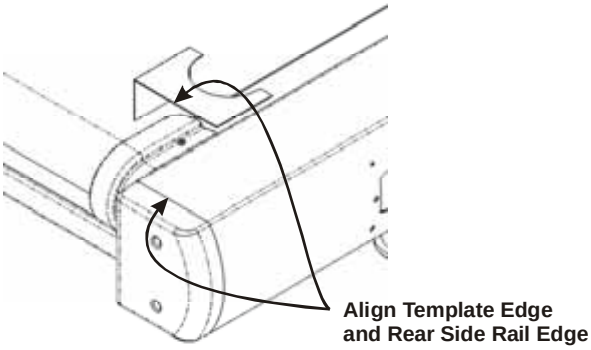

6. Place one Anti-Slip Pad in position at the rear Template as shown. Position one template at the front of the side rail, as shown, aligning the inside edge of the template with the front edge of the Anti-Slip Pad. Tape the template in place as needed.

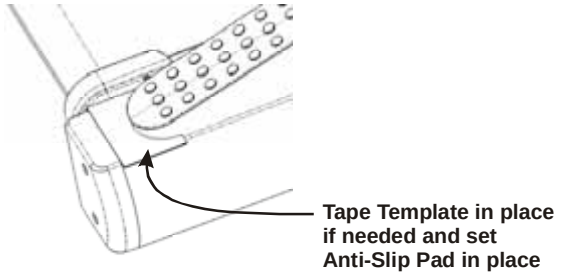


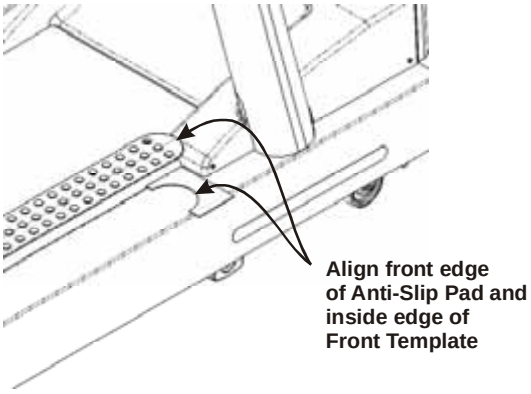


7. The Anti-Slip Pad has a split back peel-off liner. Remove one side of this liner.

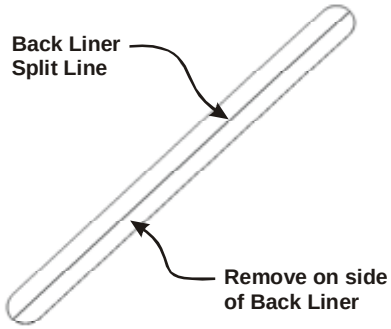


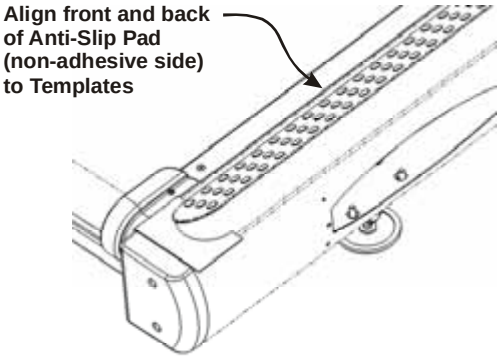


8. Re-position the edges of the Anti-Slip Pad that has the back liner left on it (the non-sticky side) with the templates. Once the Anti-Slip Pad is properly aligned with the front and rear templates, press down on the Anti-Slip Pad securing it in position on the side rail. Lift on the front or rear edge of the Anti-Slip Pad without the back liner removed and peel of the remaining back liner. With all the back liner material removed, press down firmly on the Anti-Slip Pad to remove any trapped air. Carefully remove templates and repeat steps five through eight for remaining side of treadmill.

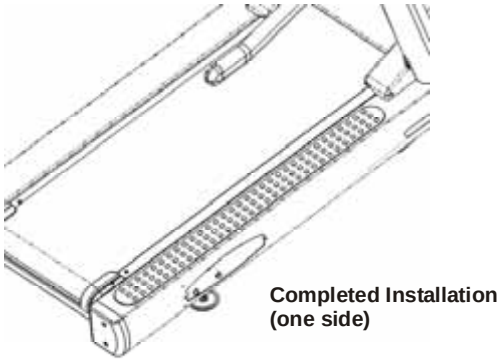

# How To... Replace the Wax Motor/Pump Assembly

**Special Service Tools Required: NONE**

1. Turn the unit power OFF at the switch, and then unplug the line cord at the wall outlet.
2. Remove two screws from the left side of the Frame securing the left Access Cover.
3. Remove the Access Cover and set it aside.
4. Clamp off the Wax Hose, and then disconnect the Wax Hose from the Motor.
5. Disconnect the 2-Pin CONNECTOR from the Wax Motor/Pump.
6. Remove two screws securing the Wax Motor/Pump Assembly, which are located outside the left side of the Frame.

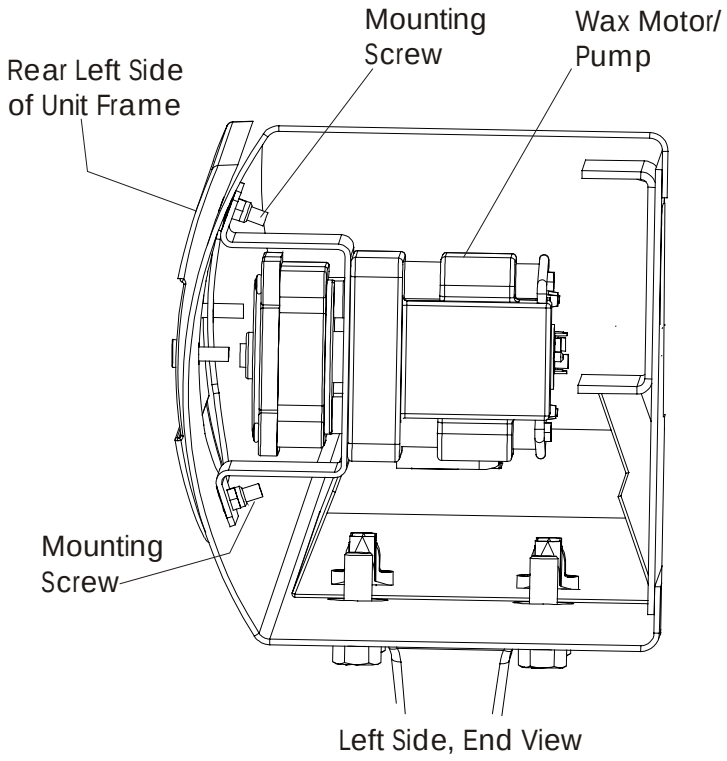


7. Remove the Wax Motor/Pump out of the access opening on the left side of the Frame.
8. Install a new Wax Motor/Pump Assembly in the reverse order.
9. Test the Wax Motor/Pump for proper operation.
10. Refer to diagnostics section to log maintenance repair of the Wax Motor/Pump.

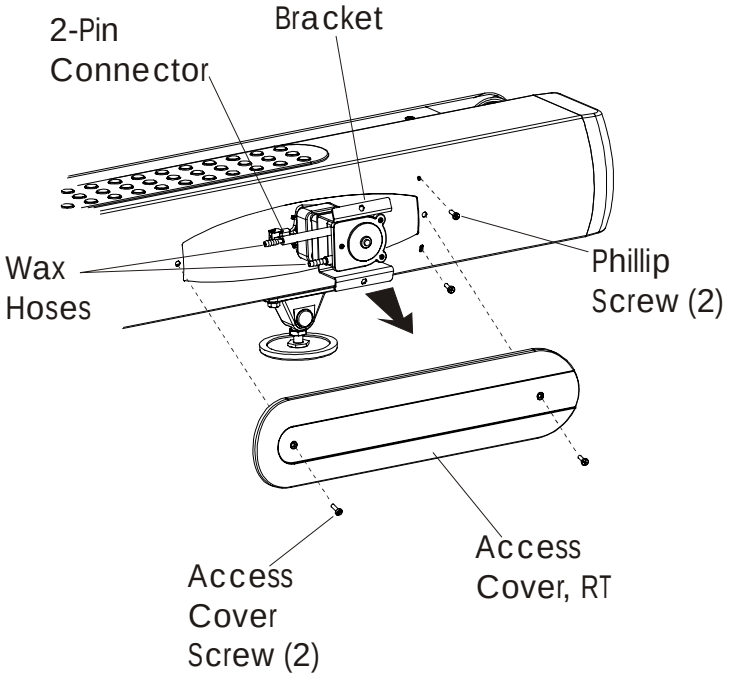

# How To… Replace the Wax Bag

**Special Service Tools Required: NONE**

1. Turn the power OFF at the switch, and then unplug the unit from the electrical outlet.
2. Remove the Access Cover on the left side of the Frame.
3. With the Hose Clamp, clamp off the Wax Hose, and then disconnect the Wax Hoses from the Wax Motor.
4. Slide the used Wax Bag Hose off the Barbed Nozzle on the Wax Pump Inlet Hose.
5. Remove the two Wing Nuts, which are located just inside the Access Hole.

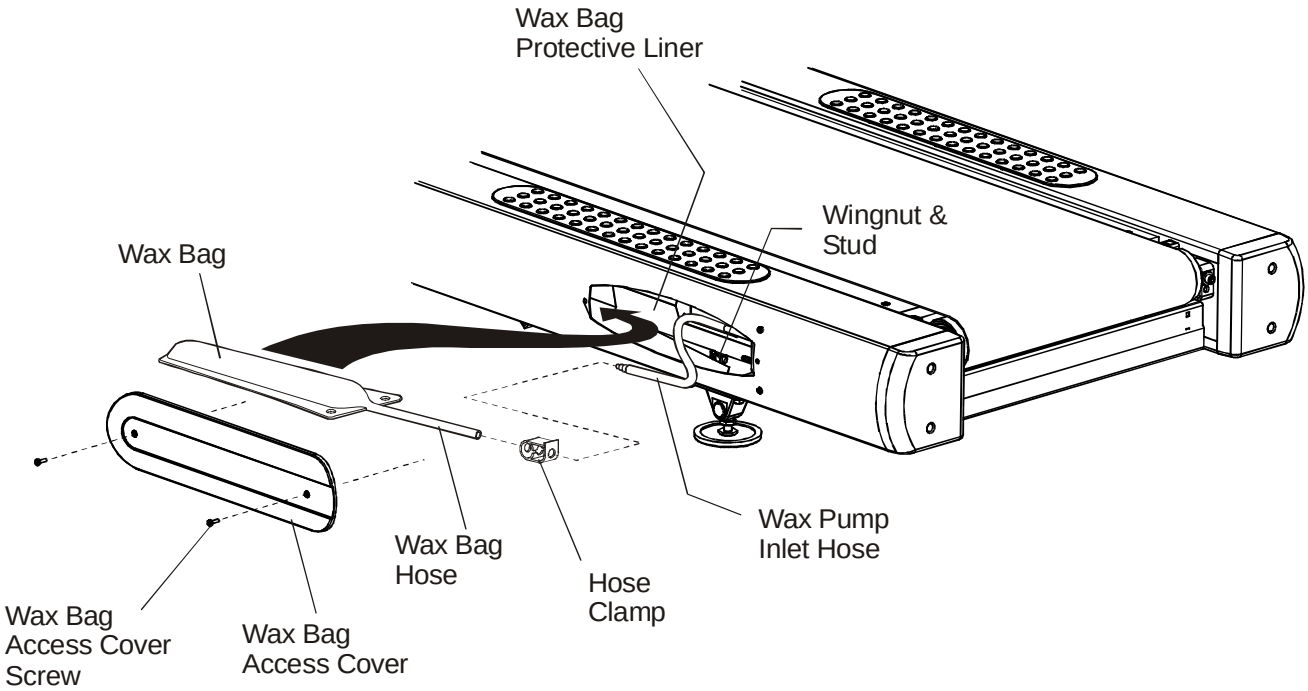


6. Lift the depleted Wax Bag off its mounting studs and remove it from the Protective Liner and out the access opening.
7. With the Wax Bag Hose facing the rear of the unit, install the new Wax Bag back into the Protective Liner.
8. Align the mounting holes in the wax bag flange over the two support studs, and then secure the Wax Bag in place with the two Wing Nuts.

Note: Be careful not to rip or damage the Wax Bag on the Wing Nut Studs.

# How To… Replace the Wax Bag (Continued)

**Special Service Tools Required: NONE**

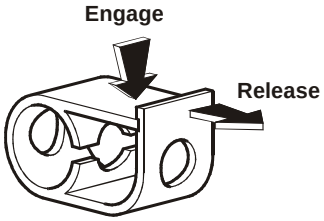


9. Slide the Hose Clamp over the end of the Wax Bag Outlet Hose. Position the Hose Clamp approximately three inches from the end of the Wax Bag Hose and engage the Hose Clamp onto the Wax Bag Hose.

10. Cut ½" off the new end of the Wax Bag Hose, and then slide the Wax Bag Hose onto the Barbed Fitting, which is located in the Wax Pump Inlet Hose. Make sure to fully seat the Wax Bag Hose, and then release the Hose Clamp.

11. Install the Access Cover.

Note: When the Wax Bag is replaced, it is necessary to reset the Wax Fill Statistics.

**RESETTING THE WAX FILL STATISTICS**

1. Press and hold down the PAUSE Key. While holding the PAUSE Key, press the CLEAR KEY twice, and then continue to hold the PAUSE Key until the Display reads " SERVICE MENU".

2. Press any UP ARROW Key until you see the word "MAINTENANCE" in the Display. Then press the ENTER Key. The Display will begin to scroll automatically through all the available options.

3. When the Display reads "REPLACE WAXER BAG", press the ENTER Key. The Display will read "REPAIR LOGGED".

4. Wax replacement is now complete.

5. To verify that the wax refill has been completed correctly, press the CLEAR Key once to return to the "SERVICE MENU".

6. Using any of the UP ARROW Keys, scroll until the word "INFORMATION" appears in the Display. Then press the ENTER Key.

7. Press any of the UP ARROW Keys until "WAX MOTOR INFO" appears in the Display. Press the ENTER Key and verify that the Display reads "WAXER-100/100 FULL".

8. Press the CLEAR Key three times to exit Diagnostic.

# How To... Replace the Lift Motor

**Special Service Tools Required: NONE**

1. Turn the unit power OFF at the switch, and then unplug the line cord at the wall outlet.
2. Remove the inside Upright Covers, Front Cover, and Motor Cover. See “How To…” in this section.
3. Cut off three Cable Ties securing the Cables to the Cross-Member.
4. Disconnect the 4-Pin Connector from the Wax Lift Board.
5. Disconnect the Lift Motor ground wire.
6. Remove the right Access Cover to avoid damaging it, and then tilt the unit over on its right side.
7. Remove the Bolt and Nut from the end of the Motor Tube and Lift Frame.
8. Remove the Clip and Pin securing the Lift Motor to the Cross-Member, and then remove the Lift Motor.

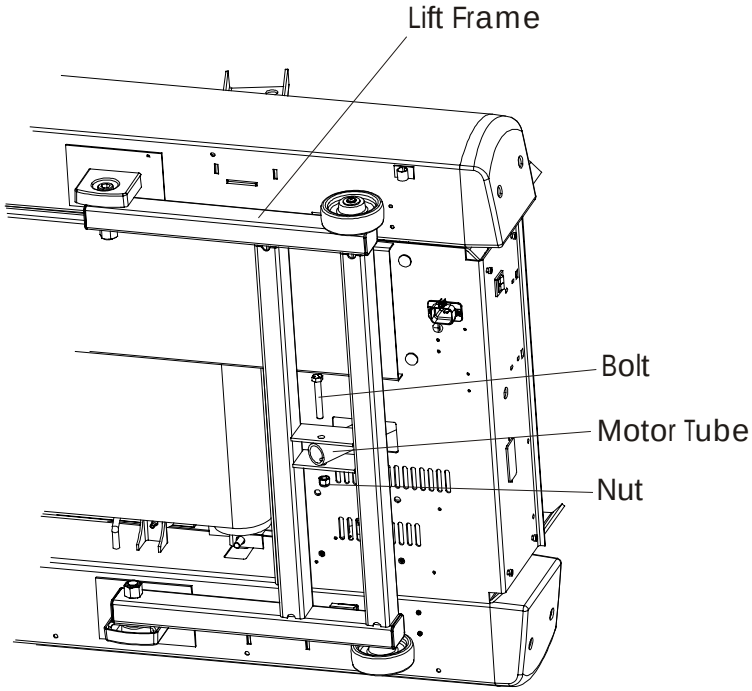


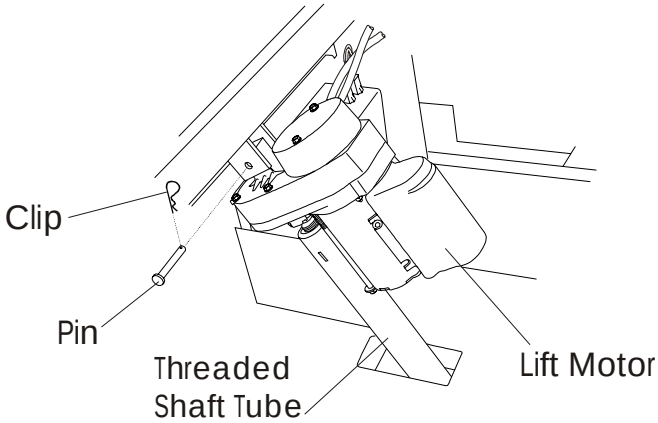


9. To install the new Lift Motor, make sure that the Lift Carriage is activating the Home Switch on 95Ti and 93T, and the Decline Switch on the 97Ti. If necessary, adjust Threaded Shaft Tube until the mounting holes are 13-3/4” apart or aligned with the Carrier and Lift Motor.
10. Refer to Diagnostics Section to log Maintenance Repair of the Lift Motor.

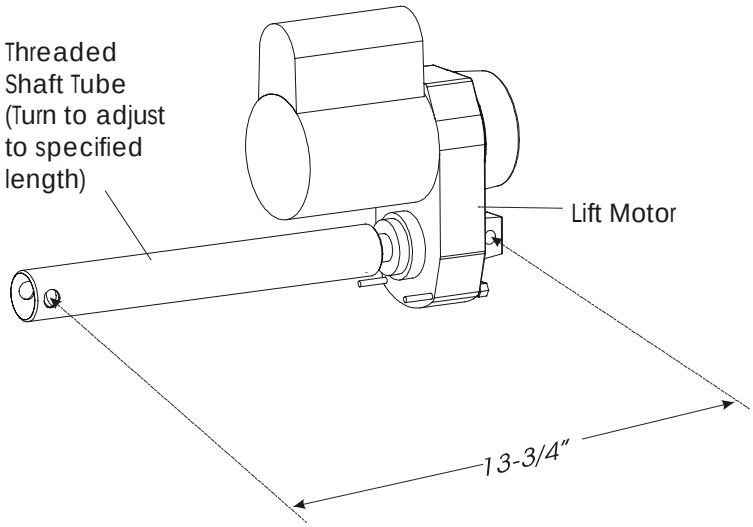

# How To... Replace the Motor Controller & Wax Lift Board (Configuration #1)

**Special Service Tools Required: NONE**

1. Turn the unit power OFF at the switch, and then unplug the line cord at the wall outlet.
2. Remove the inside Upright Covers, the Front Cover, and the Motor Cover. See “How to…” in this section.
3. Cut three Cable Tie Straps securing Wiring.
4. Remove two mounting screws at the front of the Unit.

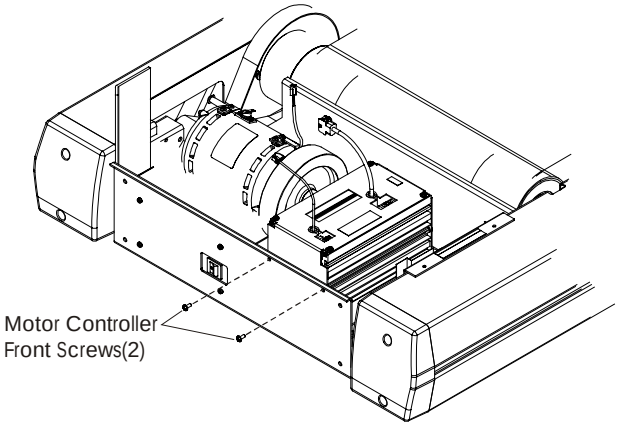


5. Remove two screws at the base of the Unit.
6. Move the Motor Controller to access the Wax Lift Board connectors.
7. Disconnect P1, 2, 3, and 5 connectors at the top of the Motor Controller.
8. Disconnect P1, 2, 4, 5, 8, and 9 connectors from the Wax Lift Board.

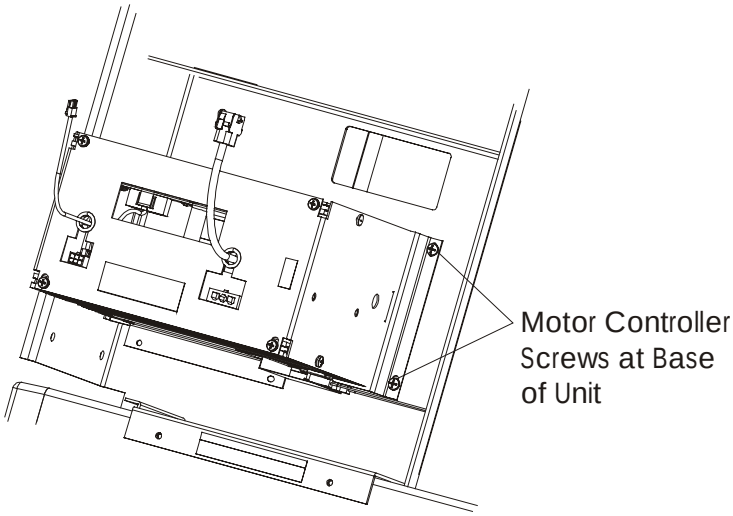


9. Lift the Motor Controller and Wax Lift Board out from the unit.

Note: Illustration not shown with Wax Lift Board for clarity purposes. See Wax Lift Board on next page.

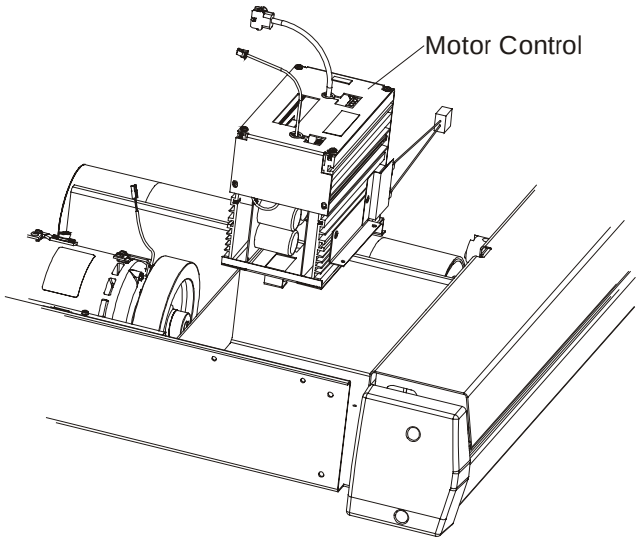

# How To... Replace the Motor Controller & Wax Lift Board (Configuration #1)

**Special Service Tools Required: NONE**

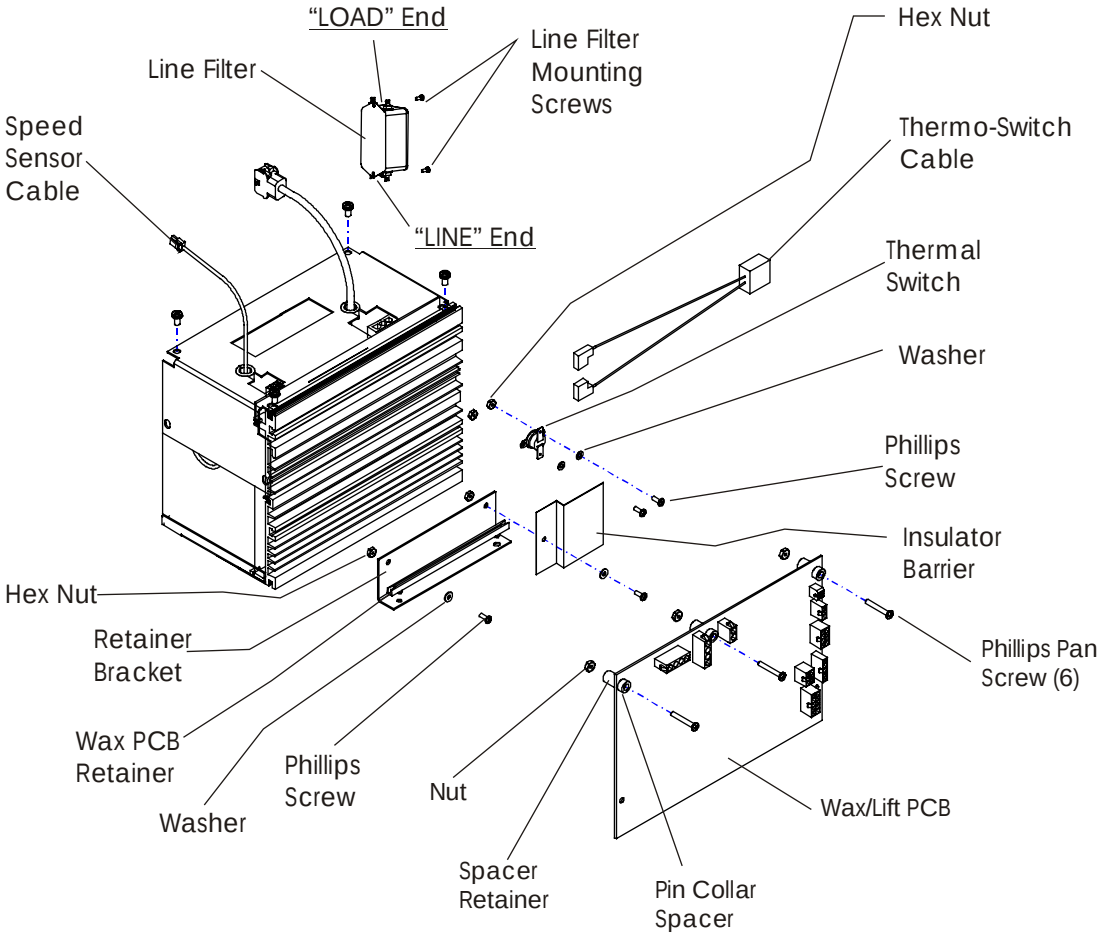


10. Remove three mounting screws and spacers securing the Wax Lift Board to the Motor Controller, and then lift it off the Plastic Retainer Bracket.

Note: Save all Screws, Spacers, and Plastic Retainer for re-use.

11. Discard Motor Controller or Wax Lift Board as necessary.

12. Re-install Motor Controller and Wax Lift Board in reverse direction of removal.

13. Perform a "SYSTEMS TEST". To do this, press the STOP button and at the same time hold down the PAUSE key. The message "SERVICE MENU" should appear. Press the ARROW Key and scroll to "SYSTEM TEST MODE" and press the ENTER Key. If an error message appears, take the appropriate action. When the error message has been resolved, press the CLEAR Key to exit test mode. Test the units general operation by pressing QUICK START. Test the incline and speeds through all levels.

14. Secure three Tie Straps around wires and Frame Support.

15. Re-install the Front Cover, Motor Cover, and Inside Upright Covers.

16. Refer to Diagnostics Section to log maintenance repair of the Wax/Lift Board.

# How To... Replace the Motor Controller Assembly, Wax Lift Assembly, and Capacitor PCB (Configuration #2)

**Special Service Tools Required: NONE**

**CAUTION! Before beginning the following steps, ALL LEDs on the Motor Controller MUST BE OUT.**

1. Turn the unit power OFF at the switch, and then unplug the line cord at the wall outlet.

2. Remove the Inside Upright Covers, the Front Cover, and the Motor Cover. See “How to…” in this section.

3. Depending on which is being replaced, disconnect the appropriate wiring from the Motor Controller Assembly or from the Wax Lift Assembly.

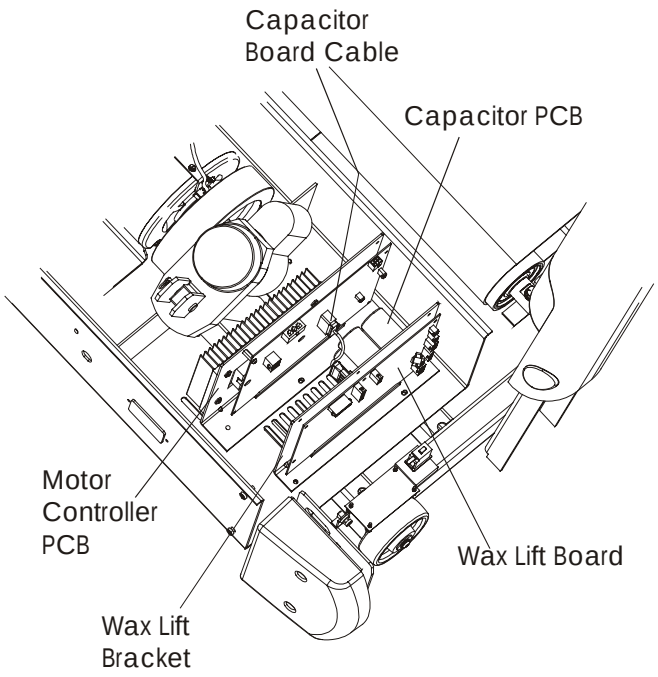


4. **To remove the Motor Controller Assembly:** Disconnect the Capacitor Board Cable from the Motor Controller Assembly. Next remove a total of five mounting screws which secure the Motor Controller Assembly to the base of the Unit. Remove two screws in the front of the Unit and three at the base of the Unit, then lift out the Motor Controller Assembly.

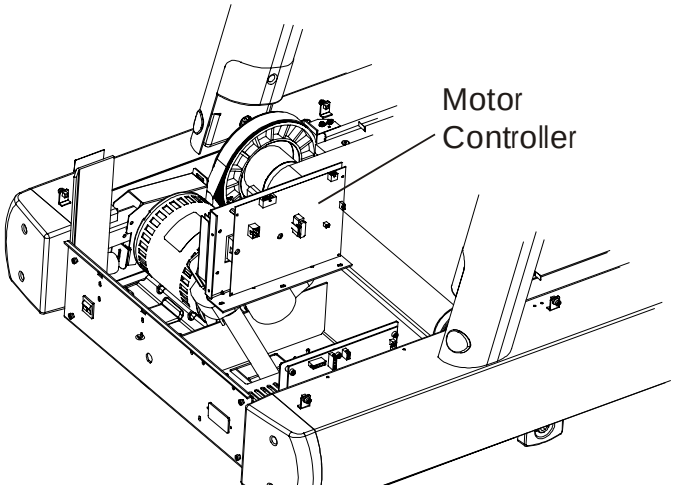


5. **To remove the Wax Lift Assembly:** Disconnect the Capacitor Board Cable from the Motor Controller Assembly. Remove two screws at the base, and then lift it out.

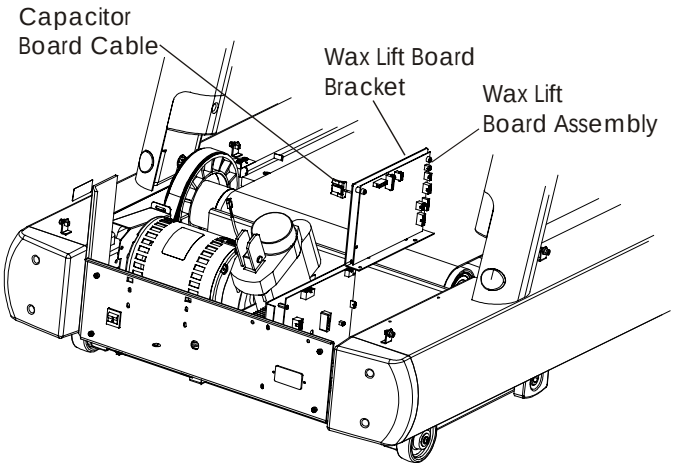

# How To... Replace the Motor Controller, Wax Lift PCB Bracket, and Capacitor PCB (Configuration #2)

**Special Service Tools Required: NONE**

6. With the Wax Lift Board Assembly out of the Unit, remove the attached Capacitor PCB from the Wax Lift Bracket for re-use. See the illustration showing exploded parts of the Wax Lift Board.

Note: If the Capacitor is physically damaged or smells burned, then replace it along with the Motor Controller Assembly.

7. Install New Motor Controller or Wax Lift Board Assembly in reverse order. Make sure to re-install the Capacitor Board back on the Wax Lift Bracket.

Note: Replace both the capacitor and power control board if they are damaged.

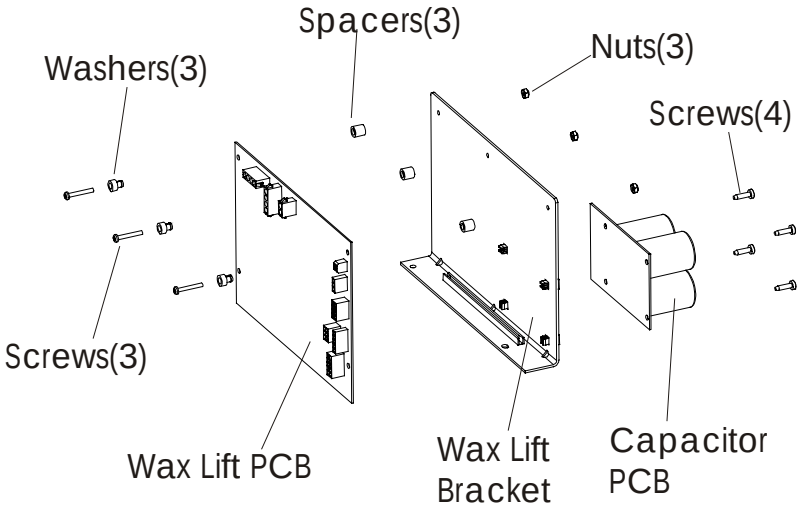

# How To…Replace the Fan Assembly – Configuration #1 Only

**Special Service Tools Required: NONE**

Note: The following procedure only applies to machines with Fan Assembly (Configuration #1). To remove the Fan Assembly requires removal of the Motor Controller and the Wax Lift Board.

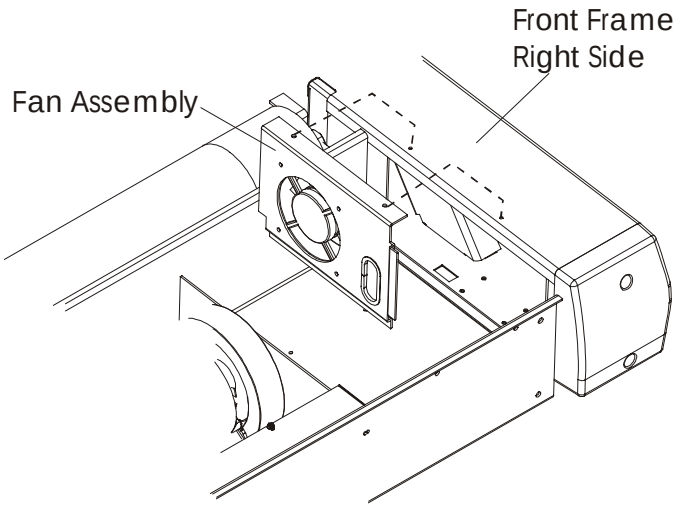


1. Turn the unit power OFF at the switch, and then unplug the line cord at the wall outlet.
2. Remove the Inside Upright Covers, Front Cover, and Motor Cover. See “How To…” in this section.
3. Cut the three Cable Tie Straps securing the wiring to the Cross-Member.
4. Remove the Motor Controller and Wax Lift Board to gain access to the Fan Assembly. See “How To…” in this section.
5. Remove two Mounting Screws on top the Left Side of Front Frame.
6. Lift out the Fan just enough to disconnect the two wire connectors at the Fan Terminals, then lift it out of the unit.
7. Remove the four slotted screws securing the Fan to Fan Bracket, and then discard.
8. Install a new Fan to the Fan Bracket using the same four slotted screws, and then install in the reverse order.
9. Perform "Systems Test" to make sure unit operates properly.
10. Secure Tie Straps around wires to the Frame Support.
11. Re-install Covers.

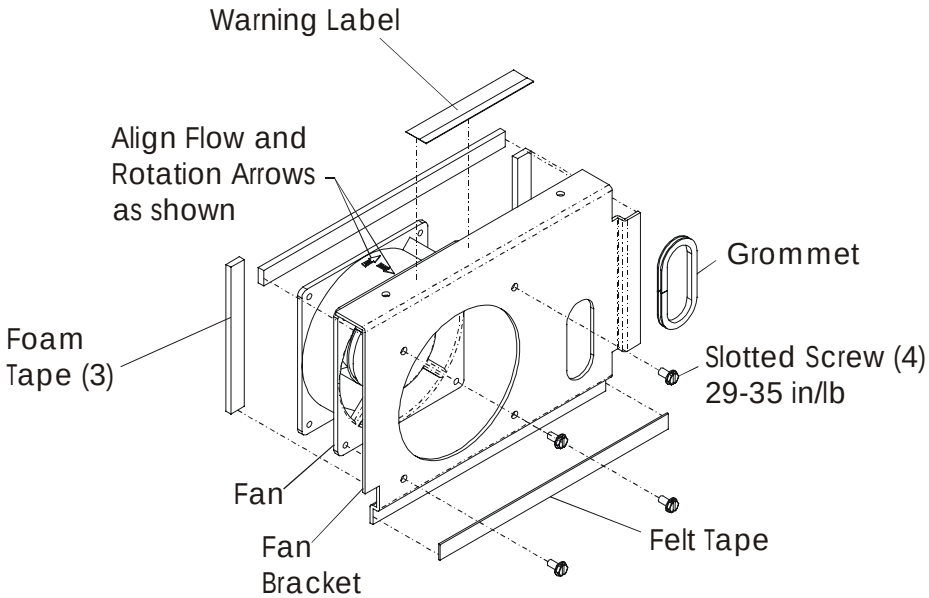


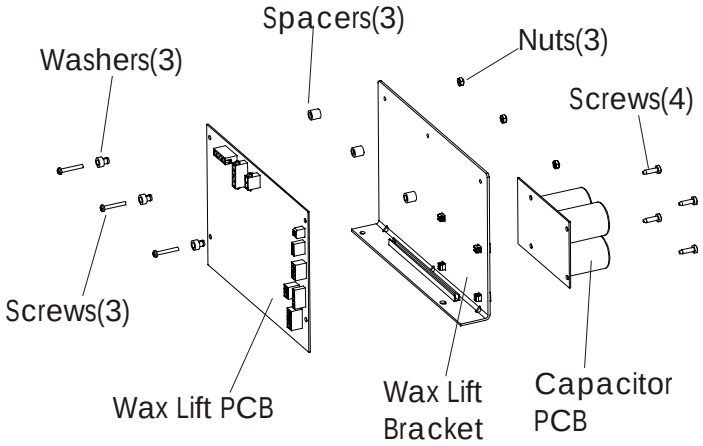

# How To... Replace the Frame Tag Board

**Special Service Tools Required: NONE**

Note: Units with Configuration No. 1, requires removal of the Motor Controller. Units with Configuration No. 2, requires removal of the Wax Lift Board.

1. Turn the unit power OFF at the switch, and then unplug the line cord at the wall outlet.

2. Remove the inside Upright Covers, Front Cover, and Motor Cover. See “How to…” in this section.

3. **Units with Configuration No.1**: Remove the Motor Controller Assembly and Fan. See “How to…” in this section.

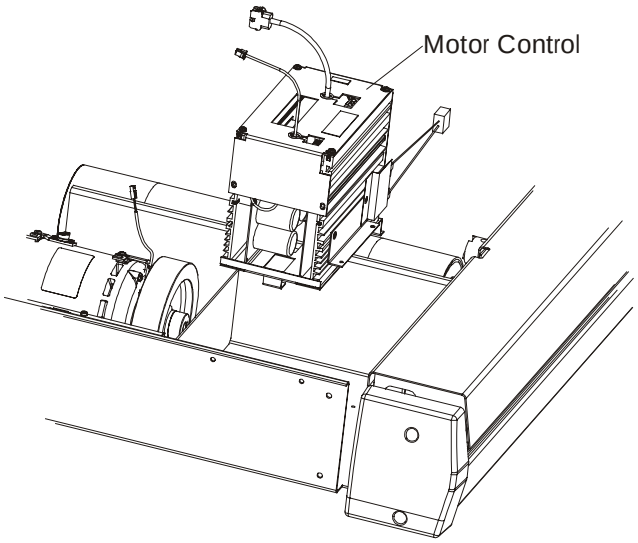


Configuration No. 1

4. **Units with Configuration No. 2:** Remove the Wax Lift Assembly. See “How To…” in this section.

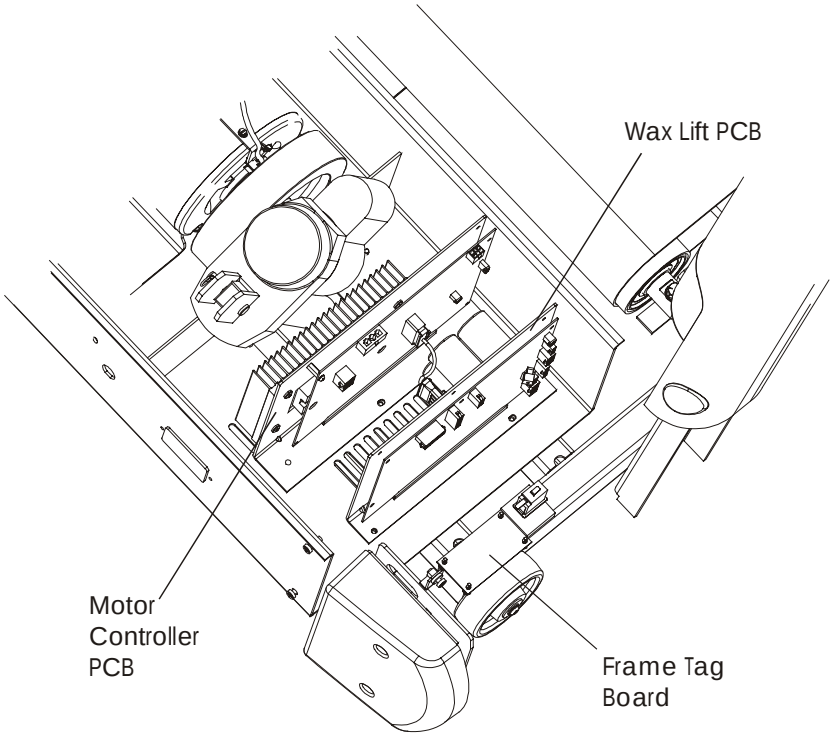


Configuration No. 2

# How To... Replace the Frame Tag Board - Continued

**Special Service Tools Required: NONE**

5. Disconnect the electrical connector on the Frame Tag Board.

6. There are four Spring Clips, which hold the Frame Tag Board in place. Squeeze the Spring Clips to release the Frame Tag Board.

7. Remove the Frame Tag Board from out of the left side of the frame.

8. Install new Frame Tag Board onto same Spring Clips in reverse order.

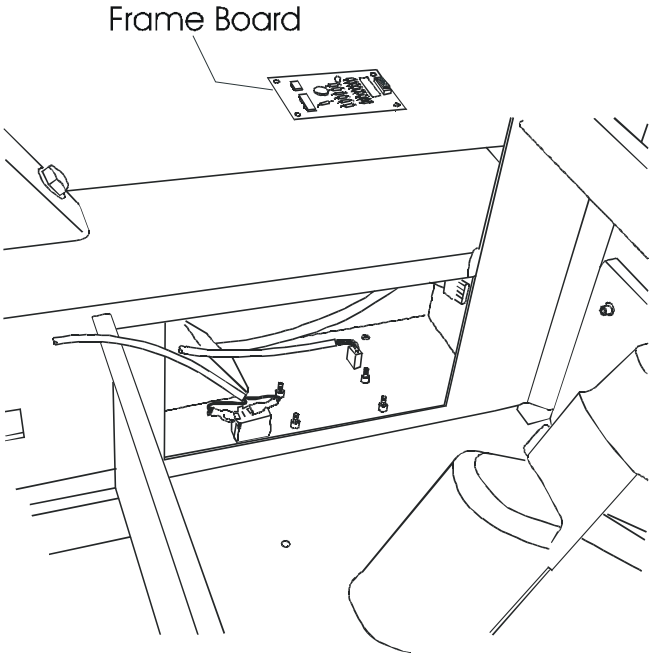

# How To... Replace the STOP Button/Switch

**Special Service Tools Required: NONE**

Note: There are two ways to stop the unit. The first way is to press the STOP Button/Switch, which is located on the right side of the Console. The second method is by pulling the Tether Line to the Emergency Stop Magnet, which is attached to the person by means of an Alligator Clip. When the Tether Line is pulled, the Emergency Stop Magnet breaks the magnetic field, which intern immediately stops all the power to the unit. The following procedure covers replacement of the STOP Button/Switch located on the right side of the Console.

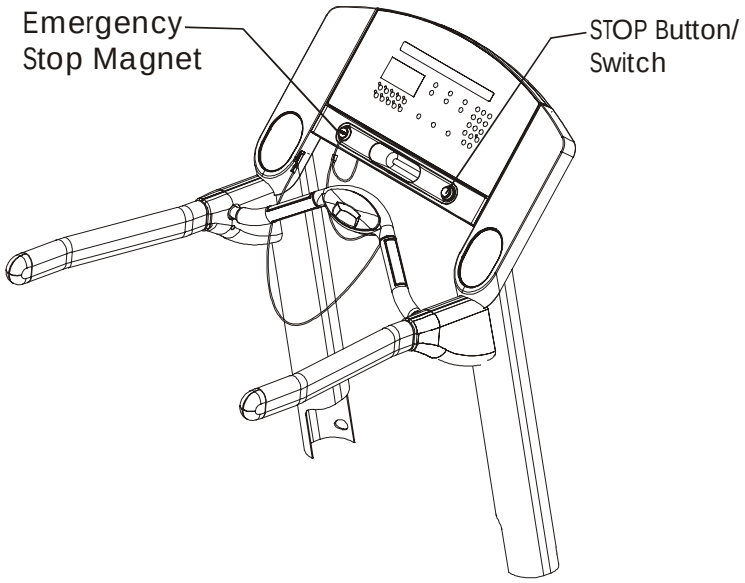


1. Turn the unit power OFF at the switch then unplug the line cord at the wall outlet.

2. Remove eight screws from the Console Back.

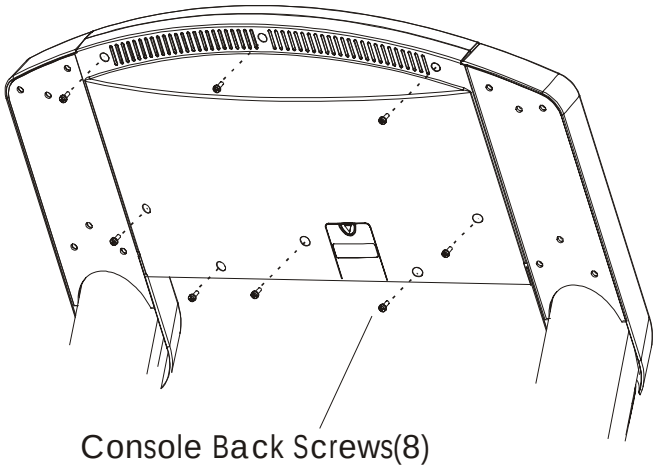


3. Lift off the Overlay Bezel Assembly.

4. Remove the Micro Switch (not shown), and then the Plastic Nut securing the STOP Button/Switch at the back of the Console Front and lift out the STOP Button/Switch.

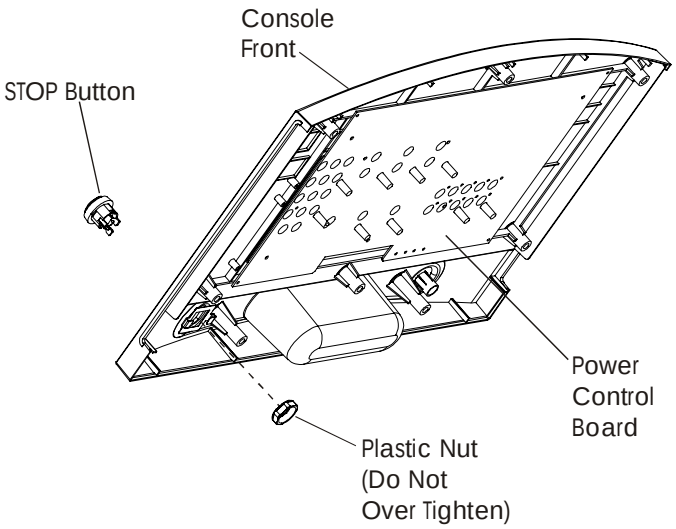

# How To... Replace the STOP Button/Switch

**Special Service Tools Required: NONE**

5. Insert the Stop Button Switch through the opening in the front of the Bezel Assembly, and orient the Switch Body so the work “STOP” is readable from the face of the Bezel.

6. Install the Plastic Nut on to the threaded portion of the Switch Body with the flat side toward the back of the Bezel and tighten1/8 of a turn past hand tight. Do Not over tighten the Plastic Nut.

CAUTION: Over tightening the Plastic Nut may cause damage to the Switch Body or the Bezel.

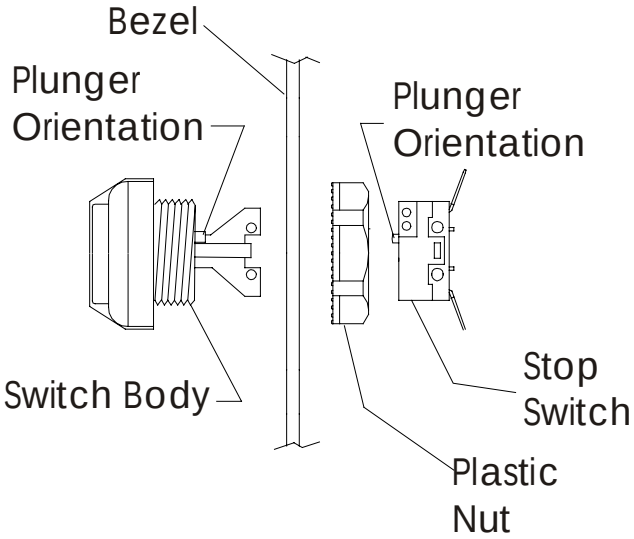


**Explode Side View**

7. Insert the Stop Switch into the STOP Button/Switch, and take special note to orient the two parts so the Switch Plungers make contact upon assembly.

Note: Verify that the plungers are making contact by pressing the STOP Button and visually ensuring they make contact with each other.

8. Reconnect the wiring being careful not to bend or break the connecting tabs.

9. Refer to Diagnostics Section to Log Maintenance Repair of the Stop Switch.

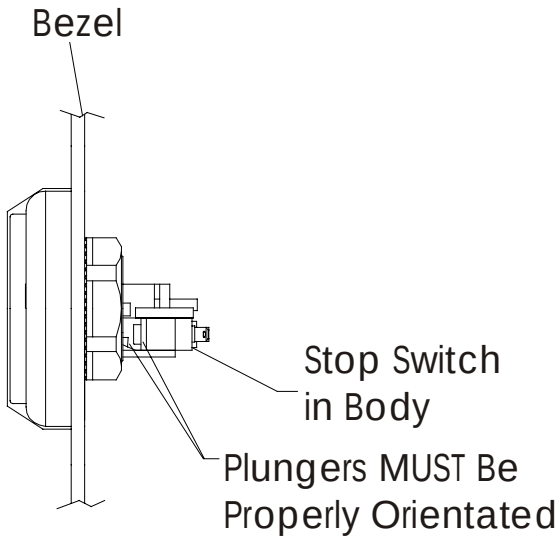


**Assembled View**

# How To... Replace the Smart Stop Circuit Board

**Special Service Tools Required: NONE**

Note: The Circuit Board and Foam Backing are part of the Smart Stop Cover Assembly. The illustration below shows an exploded view of these components for clarity purposes only.

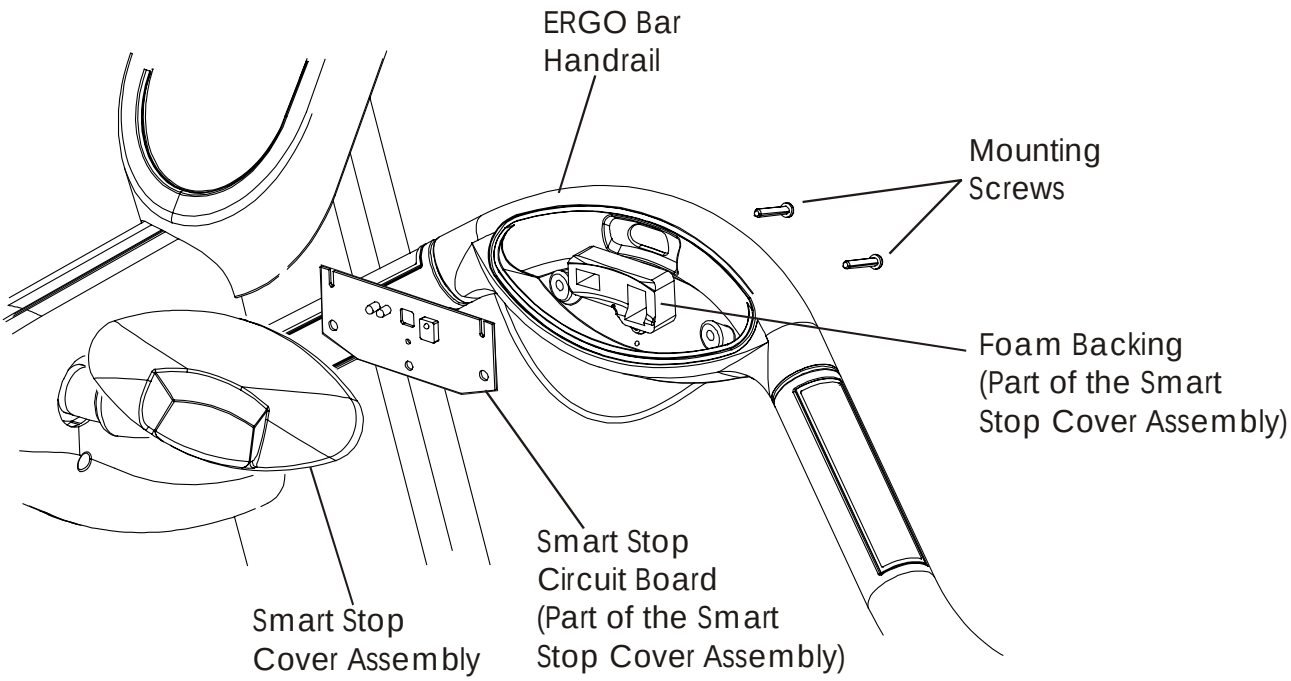


1. Turn the unit power OFF at the switch then unplug the line cord at the wall outlet.
2. Remove two screws from the back of the ERGO Bar securing the Smart Stop Cover Assembly, and then lift off the Smart Stop Cover just enough to disconnect the 4-Pin Connector from the Smart Stop Circuit Board.
3. Remove and discard the Smart Stop Assembly.
4. Install new Smart Stop Assembly in reverse order.

# How To... Replace the Heart Rate Sensors

**Special Service Tools Required: NONE**

1. Turn the unit power OFF at the switch then unplug the line cord at the wall outlet.
2. Remove two screws securing the Heart Rate Sensors.
3. Disconnect the wire (black or green) from the Ground Sensor and the wire (red or white) from the Signal Output Sensor.
4. Discard the old Sensor.
5. Install new sensors in reverse order, and tighten with screws 5-7 in lbs.
6. Repeat the above steps for the remaining Heart Rate Sensor.

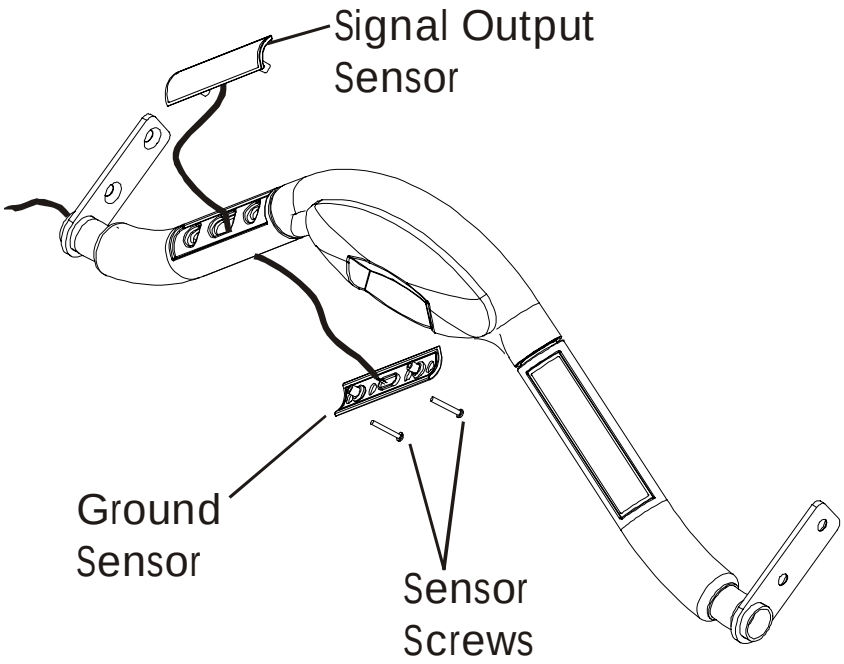

# How To... Replace the ON/OFF Switch

**Special Service Tools Required: NONE**

1. Turn the unit power OFF at the switch then unplug the line cord at the wall outlet.
2. Remove the Motor Cover. See “How To…” in this section.
3. Mark and identify the wiring to the back of the ON/OFF Switch before disconnecting, then disconnect the wiring.
4. Squeeze the tabs on the sides of the ON/OFF Switch, and remove it out the front of the unit.
5. Install new ON/OFF switch in reverse order. Use illustration to reconnect black and white wires correctly to the switch terminal.

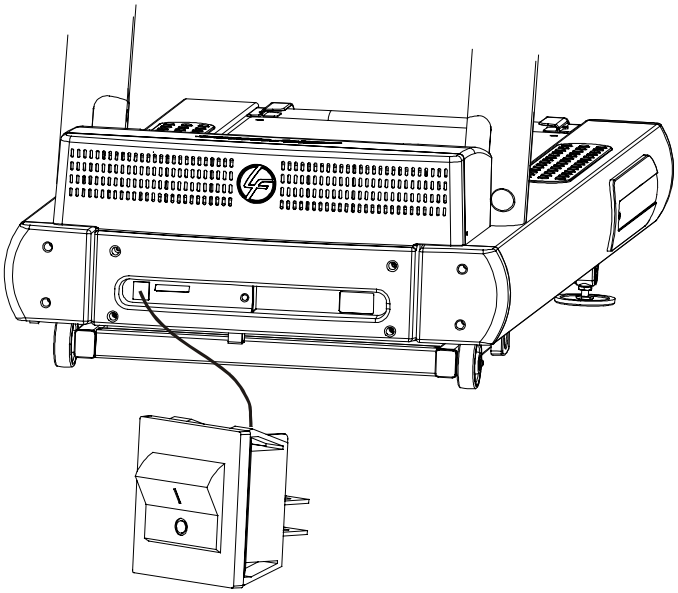

**ON/OFF Switch**

# How To... Replace the Accessory Cup Holders

**Special Service Tools Required: NONE**

1. Remove four corner screws from the back of each Cup Holder.

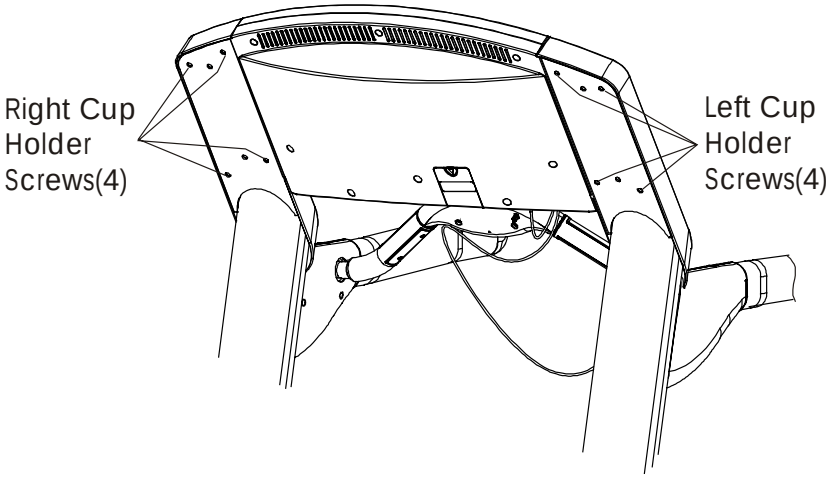


2. Lift the Cup Holders up and out of the Uprights being careful of the Heart Rate and Smart Stop Cables.

3. Install the new Cup Holders and secure in place with the mounting screws.

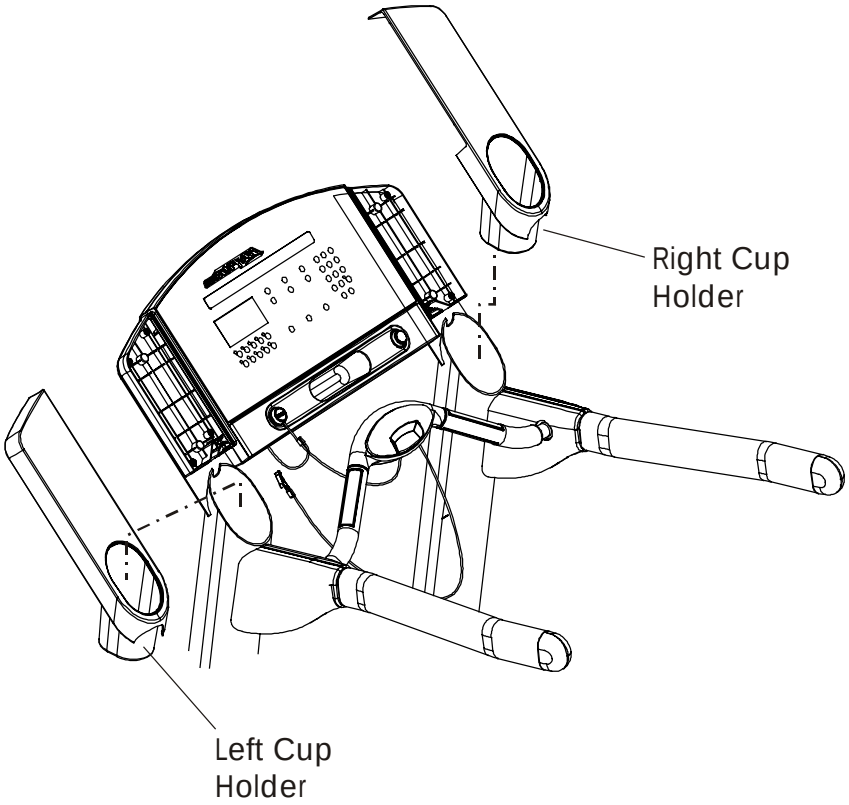

# How To... Replace the Line Cord

**Special Service Tools Required: NONE**

1. Turn the unit power OFF at the switch, and then unplug the Line Cord at the wall outlet.
2. Remove the Access Cover on the right side of the Frame, and then tilt the unit over on its right side.
3. Remove the Clamp Screw securing the Line Cord.
4. Remove the Line Cord and discard.
5. Install the new Line Cord and secure in place with the Clamp.
6. Upright the unit and reinstall the Access Cover.

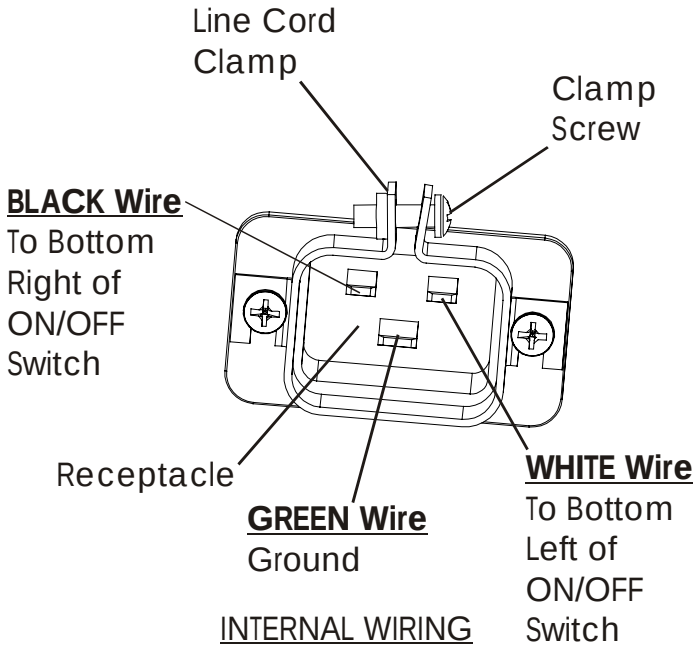

# How To... Replace the Line Filter

**Special Service Tools Required: NONE**

Note: If equipped with a Transformer, it must be removed first in order to access the Line Filter below it. Before removing the Transformer, tag and identify all wires.

Note: The Line Filter is located directly in front of the Drive Motor, and if equipped, just below the Transformer. Before removing the Line Filter, tag and identify all wires.

1. Turn the unit power OFF at the switch, and then unplug the line cord at the wall outlet.

2. Remove Inside Upright Covers, Front Cover, and Motor Cover. See “How To…” in this section.

3. If equipped with a Transformer, it must be removed first in order to access the Line Filter below it. Before removing the Transformer, tag and identify all wires.

4. Tag and identify all wires connected to the Line Filter, which is located in front of the Drive Motor. With all wires properly identified, disconnect them from the Line Filter.

5. Remove two screws securing the Line Filter at the base of the unit, and then lift out the Line Filter.

6. Discard the old Line Filter, and install a new Line Filter in reverse order. See Line Filter Wiring Schematic in Section 4.

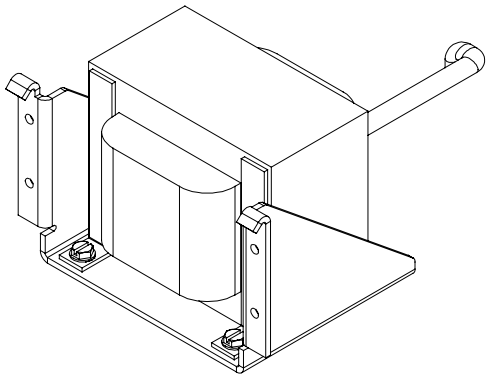

Transformer

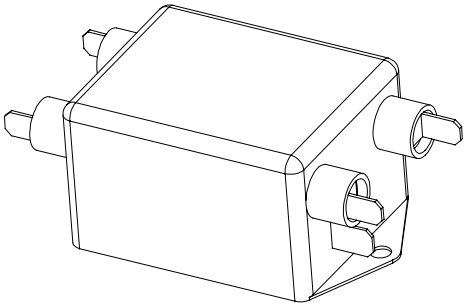

Line Filter

# How To... Replace the Display Board PCB

**NONE Special Service Tools Required: NONE**

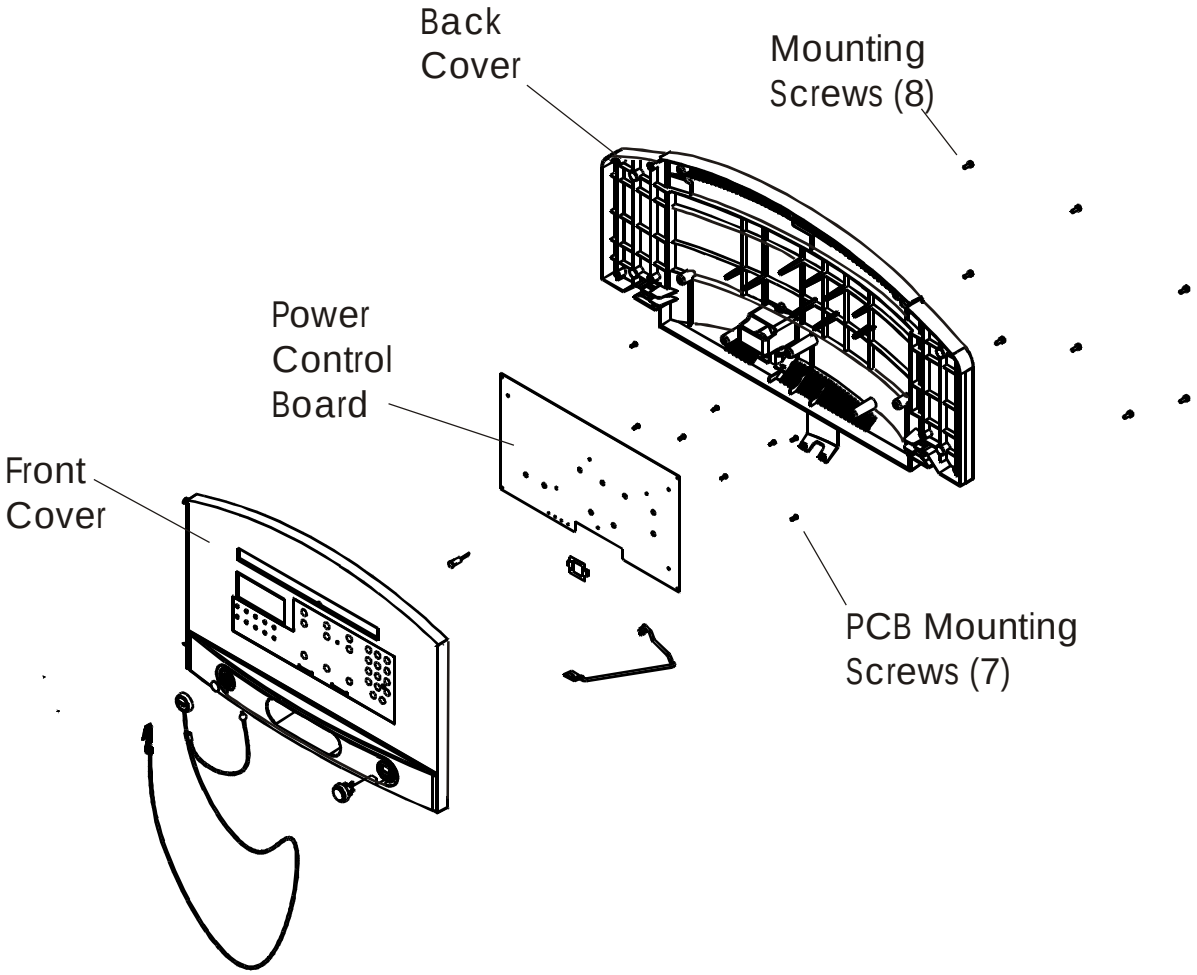


1. Turn the unit power OFF at the switch, and then unplug the line cord at the wall outlet.
2. Remove eight screws from the Back Cover of the Console.
3. Lift off the Front Cover. Disconnect all the Cables and Ribbon Connectors from the PCB Board.
4. Remove eight screws from the PCB, and then remove the PCB. Send the PCB back to Life Fitness.
5. Install new PCB in reverse order.  DO NOT over tighten mounting screws.
6. Reconnect the Cables and Ribbon Connectors to the PCB.
7. Install the back cover. DO NOT over tighten screws.
8. Refer to Diagnostics Section to Log Maintenance Repair of the Display Console Control Panel.

# How To... Replace the Telemetry Receiver

**Special Service Tools Required: NONE**

1. Turn the unit power OFF at the switch then unplug the line cord at the wall outlet.

2. Remove eight screws from the Console Back. See “How To…” in this section.

3. Lift off the Console Front and disconnect necessary wiring.

4. Remove the Telemetry Receiver and Cable from the inside left corner of the Console Front, which is held in place with an adhesive pad

5. Install new Telemetry Receiver with new Adhesive Pad in reverse order.

6. Re-install the Console Front to the Console Back, making sure all connectors are firmly installed.

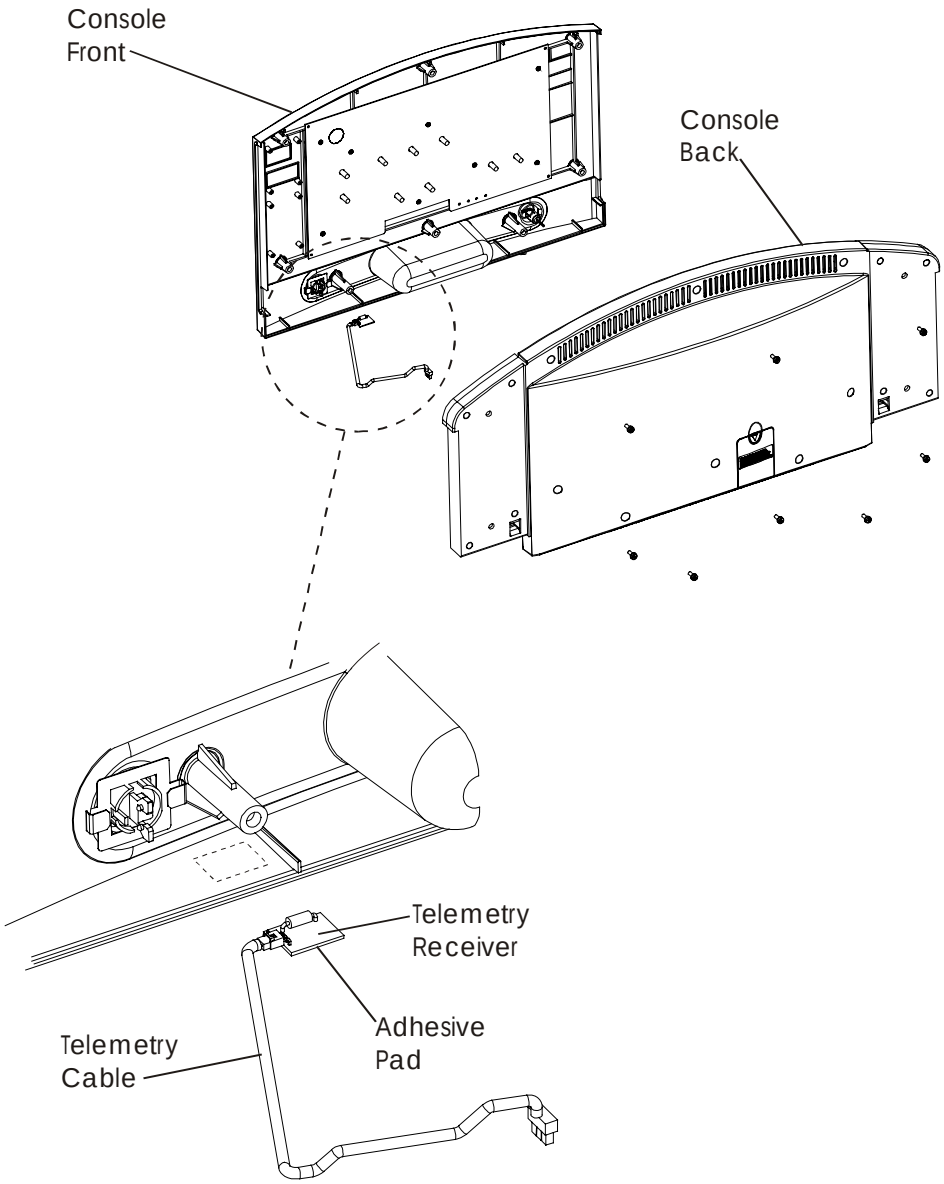

# How To... Replace the Main Wire Harness

**Special Service Tools Required: NONE**

1. Turn the unit power OFF at the switch, and then unplug the line cord at the wall outlet.

2. Remove the Inside Upright Covers, Front Cover, and Motor Cover. See “How To…” in this section.

3. Remove the Console Assembly. See “How To…” in this section.

4. Disconnect the Main Wiring Harness from the Motor Controller, and then pull out the Main Wiring Harness.

5. Install new Main Wiring Harness through the top of the Left Upright (Upright), and connect to the Motor Controller.

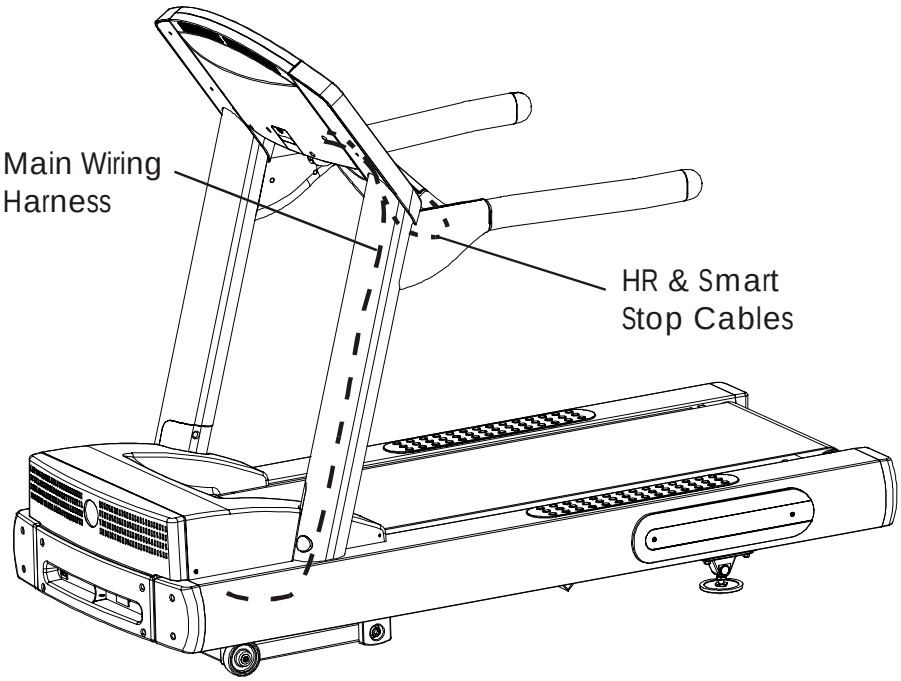


6. Reconnect to the Console Assembly.

7. Install Covers.

# How To... Replace the Console Assembly

**Special Service Tools Required: NONE**

Note: To disconnect the wiring leading inside the Console Assembly, the Console Assembly must be split.

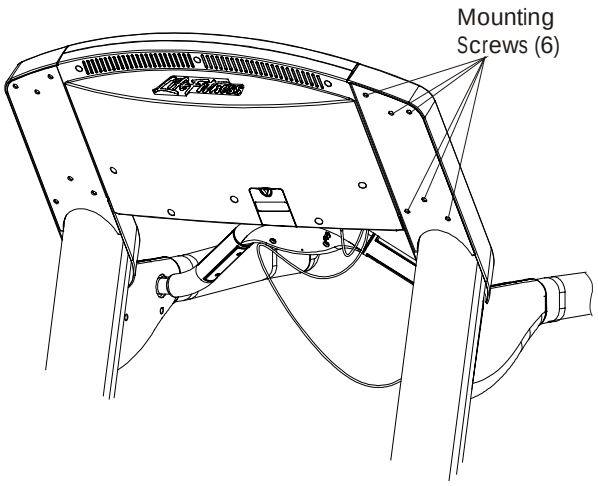


1. Turn the unit power OFF at the switch then unplug the line cord at the wall outlet.

2. Remove six mounting screws from the back of each Cup Holder.

3. Lift the Cup Holders up and out of the Uprights being careful of the Heart Rate and Smart Stop Cables.

4. Remove eight screws from the Console Back and lift out the Console Front while disconnecting electrical connectors from the Console Power Control Board (PCB).

5. Install new Console Assembly in reverse order.

6. Install the Cup Holders back into the Uprights being careful of the electrical cabling.

7. Refer to Diagnostics Section to Log Maintenance Repair of the Display Console Control Panel.

# How To... Replace the Overlay Bezel

**Special Service Tools Required: NONE**

Note: The Overlay Bezel is part of the Console Front Assembly, however, the Console PC Board is not. Therefore, the Console PC Board must be removed from the back of the Console Front.

1. Turn the unit power OFF at the switch, then unplug the line cord at the wall outlet.

2. Remove eight screws from the Console Back.

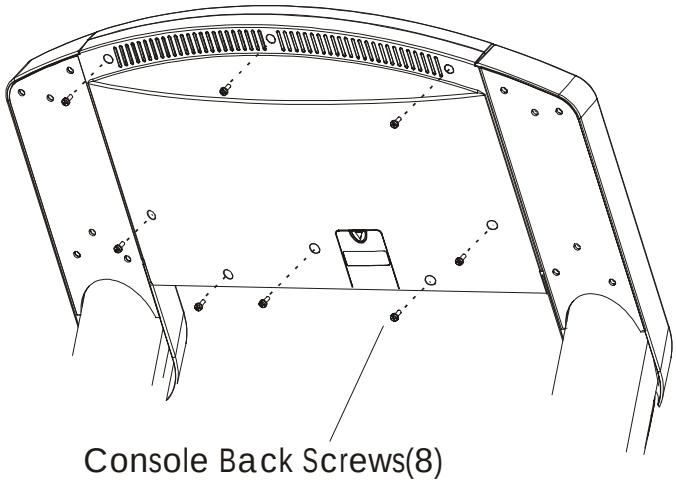


3. Lift the Console Front off just enough to disconnect the electrical connectors from the Console PC Board.

5. Remove the screws securing the Console PC Board to the back of the Console Front, and then disconnect the Ribbon Cables from the Console PC Board. Now set the PC Board aside for re-use on the new Overlay Bezel.

6. Install new Overlay Bezel Assembly in reverse order. Make sure that all connectors and ribbon cables are securely fastened to the Console PC Board.

7. Refer to Diagnostics Section to Log Maintenance Repair of the Overlay Bezel.

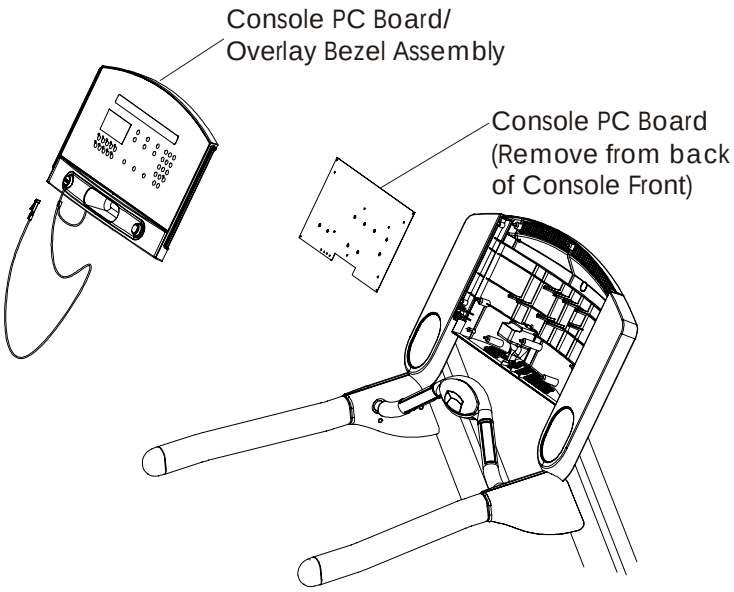

# How To... Replace the ERGO Bar, Handrail, and Uprights

**Special Service Tools Required: NONE**

Note: The Uprights MUST be loosened so that they can be spread apart enough to remove the ERGO Bar. Also, the Console Assembly MUST BE REMOVED.

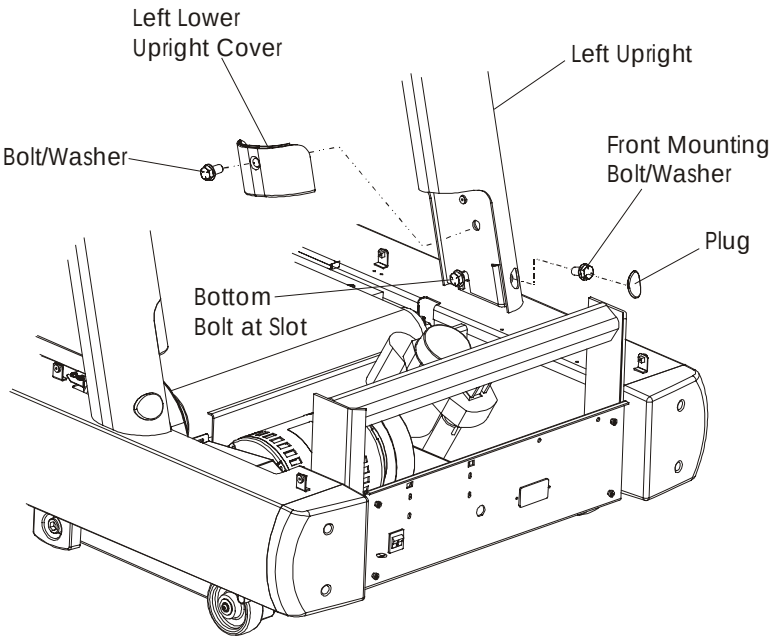


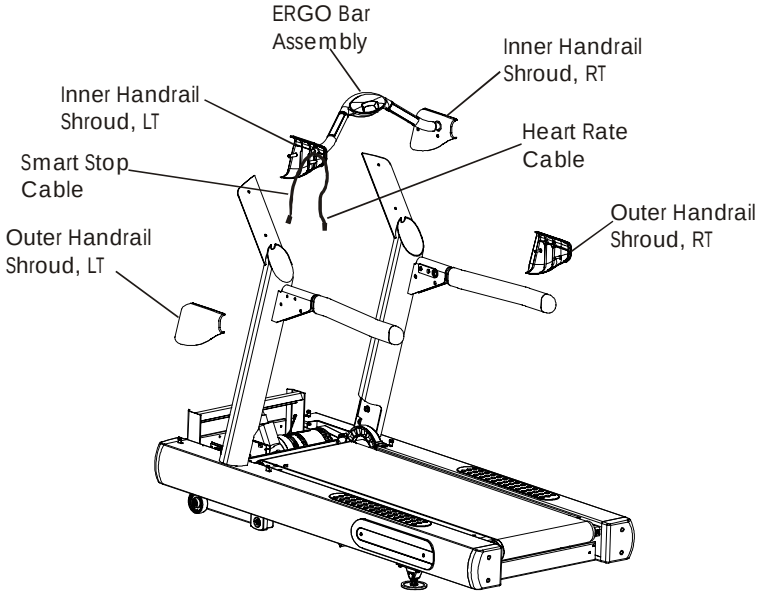


1. Turn the unit power OFF at the switch then unplug the line cord at the wall outlet.
2. Remove the Inside Upright Covers, Motor Cover, and Front Cover. See “How to…” in this section.
3. Remove the Plug at the front of each Upright, and then remove the Mounting Bolt under each Plug.
4. Loosen the Inside Mounting Bolts on each Upright.
5. Remove the Console Assembly. See “How To…” in this section.
6. Remove the Left and Right Outer Handrail Shrouds.
7. Move the Inner Shrouds towards the center of the ERGO Bar.
8. Remove the Left and Right Mounting Bolts securing the ERGO Bar from the Handrails.
9. Separate the Uprights enough to remove the ERGO Bar along with the Heart Rate and Smart Stop Cables.
10. If necessary, replace the Handrails. Notice that the Handrail ends curve outward.
11. Remove the bolts securing the Uprights, and lift the Uprights out from the frame supports.
12. If necessary, install new Uprights leaving all the mounting bolts loose.
13. If installing new Handrails, make sure the curved ends face outward.
14. Install the new ERGO Bar Assembly being careful not to pinch the Smart Stop Cable or Heart Rate Cable during installation.
15. Install the Console Assembly in reverse order, making sure to route Cables through the channel guides in the Console Back Cover.
16. After all components are positioned properly, then proceed to tighten all loose hardware.

# How To...Clean the Wax Nozzle

**Special Service Tools Required: NONE**

1. Turn the unit power OFF at the switch, and then unplug the line cord at the wall outlet.
2. Remove two screws from the Access Cover on the right side of the unit.
3. Reach inside the unit and locate the Wax Nozzle. Push the tip of the Wax Nozzle in and rotate clockwise 1/4 turn and remove the nozzle.
4. Place the nozzle in a container of hot water and let sit for at least 10 minutes.
5. Remove the nozzle from the water and inspect for cleanliness. If necessary, scrub-clean with a medium-to-soft bristle brush to remove any wax residue from outside and inside the wax nozzle.
6. Dry the nozzle off with a lint-free rag.
7. Reinstall the wax nozzle by pressing in and rotate 1/4 turn counterclockwise.

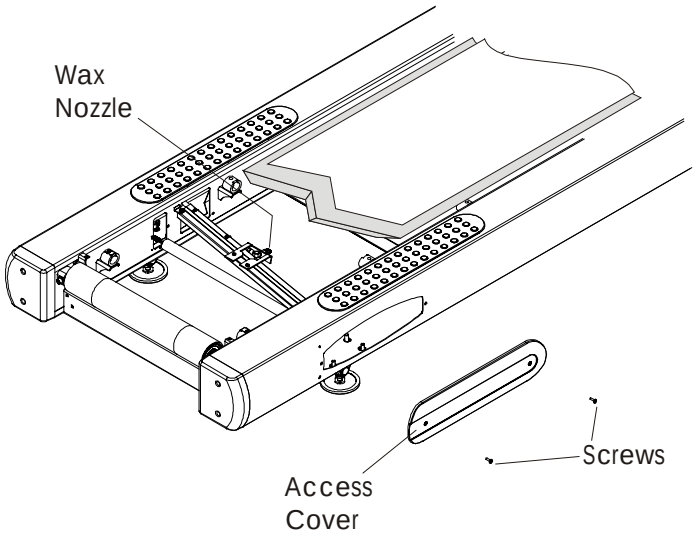


**<u>IMPORTANT:</u> MAKE SURE THAT THE FLATS ON THE WAX NOZZLE ARE POSITIONED IN A HORIZONTAL PLANE. FAILURE TO DO SO WILL RESULT IN IMPROPER WAX APPLICATION.**

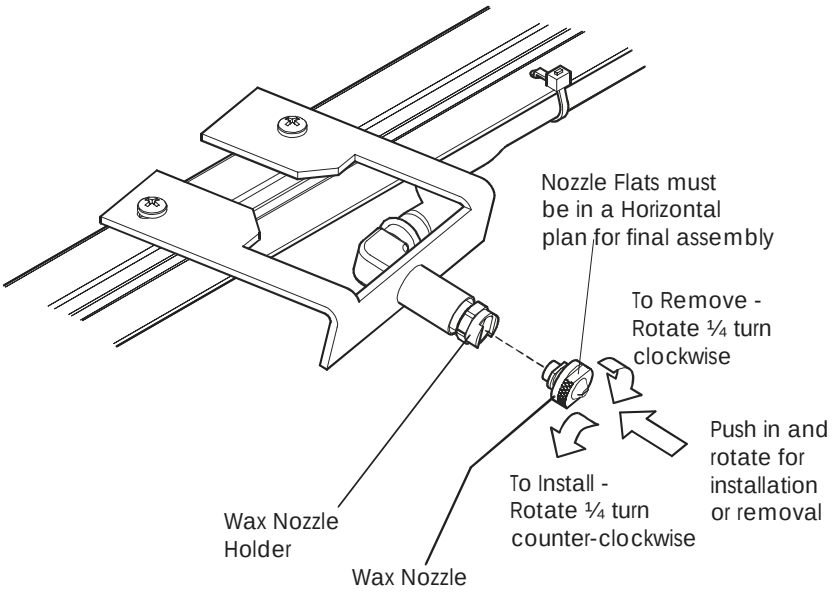

# How To...Adjust the Lift Actuator

**Special Service Tools Required: NONE**

1. Verify that the home switch is functioning. Enter into Diagnostics (see Section 2). Select *Incline Manual*. A “0” should appear in the lower right corner of the Profile Window when activated. Also the Wax/Lift LED 4 and 5 will be lit when home switch is activated. If not, then proceed to next step.

2. Drive the Lift System down until the actuator's internal limit switch stops the lift function. Disconnect power from the treadmill.

3. Measure and record the space between the top of the lift wheels and bottom of the unit frame.

4. Turn the treadmill over on its side.

5. Remove the 3/8-16 nut and bolt from the Lift Arm Weldment.

6. Turn the actuator tube clockwise (in towards the motor) in half-turn increments to approximately equal the space measured in Step 3. One-half turn of the actuator tube shortens the operating length by 1/16”. Make sure the bolt holes align.

**Example:** If the space between the top of the wheel and the bottom of the frame is 3/16”, turn the actuator tube 1-1/2 turns clockwise (in towards the motor). If the space is 5/32”, turn the actuator tube 1 turn clockwise.
**<u>IMPORTANT</u>: Be careful not to turn the actuator screw while turning the actuator tube.**

7. Install the Actuator tube back into the Lift Arm weldment and secure with nut and bolt.

8. Verify orientation of switch so that the terminal connector is facing toward the Frame Tag PCB. If backward, remove and reinstall to proper orientation as shown.

9. Turn the treadmill over and restore power.

10. Test the lift function in a user program. Note: If necessary, balance the unit and adjust striding belt tracking.

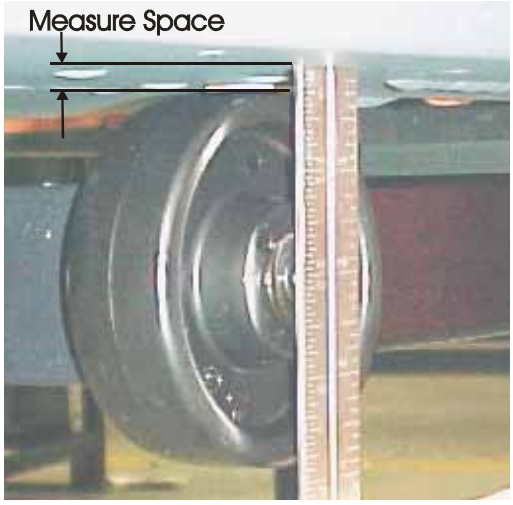


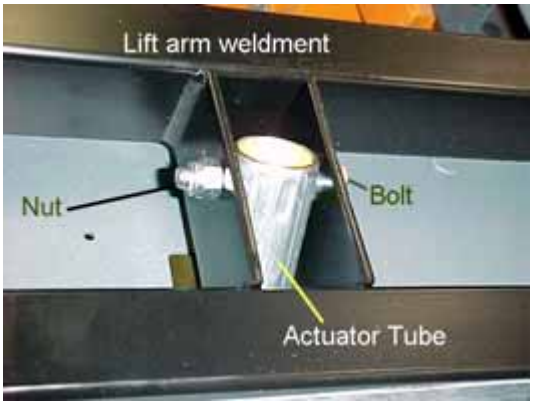


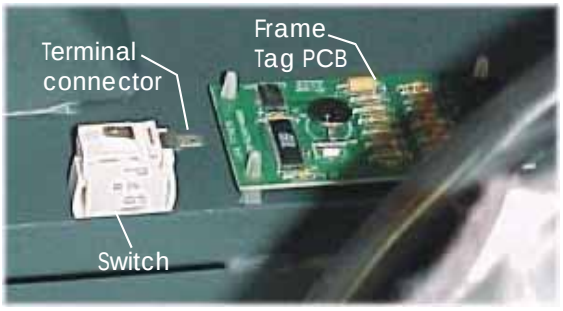

# How To... Replace the Leveler Assembly

**Special Service Tools Required: NONE**

1. Turn the unit power OFF at the switch, and then unplug the line cord at the wall outlet.

2. Raise the back end of the treadmill, and then block up the Frame to keep the Leveler slightly off the ground.

3. Depending on the Level being replaced, remove the Access Cover on the side of the unit Frame to gain access to the Leveler Mounting Nuts. Remove the four mounting nuts from the Leveler Assembly Bolts, and then remove the Leveler.

4. Install new Leveler Assembly in reverse order. Note that the hole patterns in the Bracket Leveler, can only be re-installed one way.

5. Loosen the Stop Nut and turn the Leveling Foot in or out until the unit is level and rests firmly on the floor. Retighten the Stop Nut.

Note: Make sure the Stop Nut is properly seated against the Pivot Pin.

Note: It is extremely important that the Leveling Foot be correctly adjusted for proper unit operation. An unbalanced unit can cause Striding Belt misalignment.

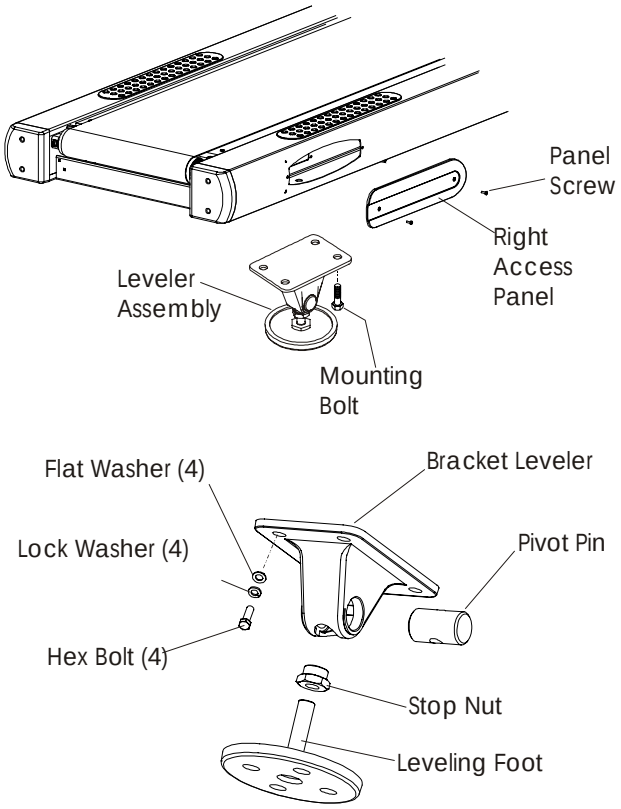

# LCD Integrated Console Service Review

**Special Service Tools Required: NONE**

**NOTE: The following pages provide service procedures for servicing the LCD Integrated Console. While the Console Housings may differ between the various products, the internal components, which make up the Console, are identical. Use the exploded view below to help identify parts and component location during service.**

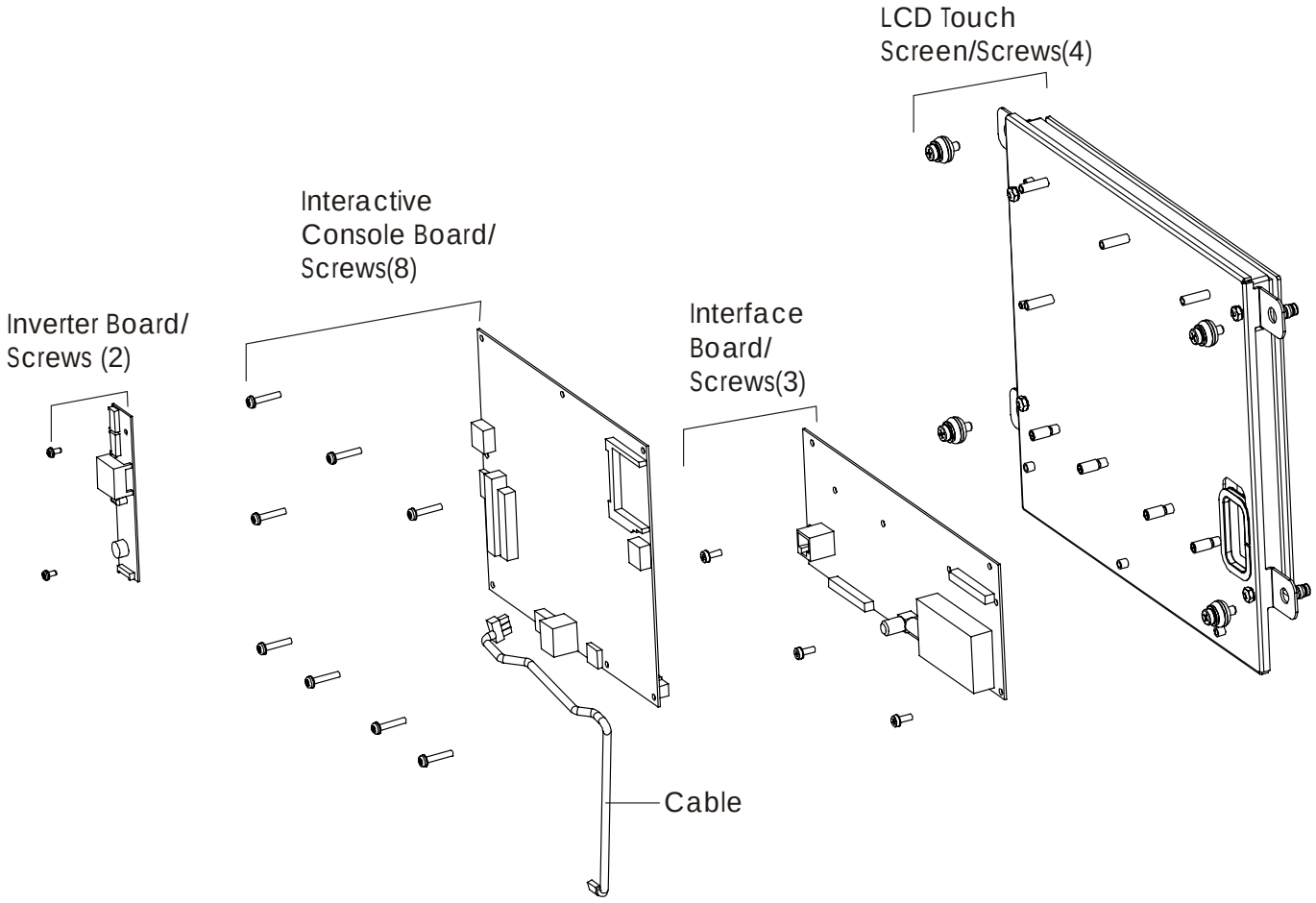

# How To... Replace the Headphone Jack

**Special Service Tools Required: NONE**

Note: For clarity purposes some of the treadmill parts are shown removed from the Unit, which is not required to replace the Headphone Jack.

1. At the bottom of the Console remove the Phillip Screw securing the Headphone Jack Assembly and then remove the Headphone Jack.

2. Unplug the attached cable.

3. Install new Headphone Jack reverse order.

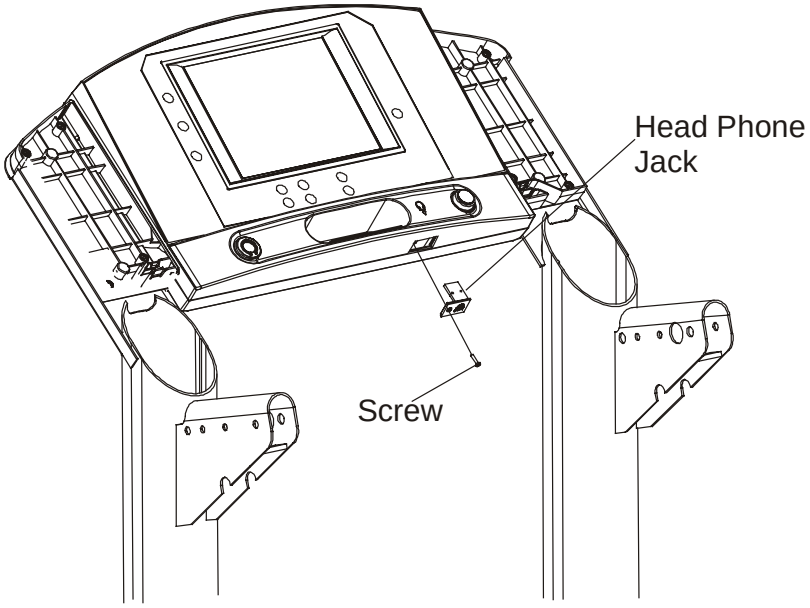

# How To... Replace the Inverter, Single Computer & Interface Boards

**Special Service Tools Required: NONE**

Note: The following steps cover replacement of all boards attached to the back of the LCD Touch Screen Assembly. Use the illustrations on this page to aid in board replacement.

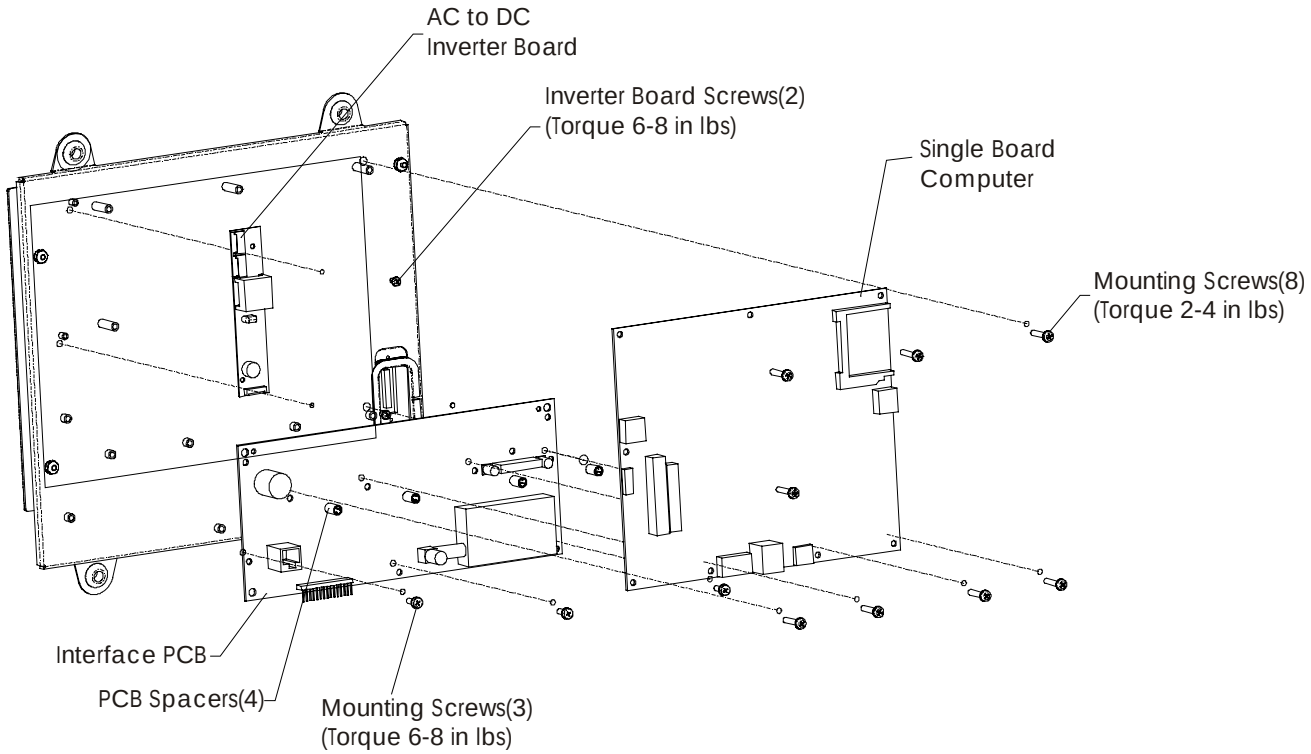


**Inverter Board**

1. Disconnect the Pink/White Wires from the two Backlight Connectors and the four Yellow Wires from the Inverter Board.
2. Remove two Inverter Board Screws and lift off the Inverter Board.

**Single Board Computer**

3. Disconnect the 5-Pin Touch Screen Communication Ribbon Cable and the 41-Pin LCD Communication Ribbon Cable.
4. Remove the Mounting Screws securing the Single Board Computer. The Single Board Computer remains engaged into a 24-Pin Connector Receptacle, which is located between two Connector Pins on the Interface Board. Carefully wiggle the Single Board Computer up and out of the Interface Board Connector Receptacle and Connector Pins.

**Interface Board**

5. Remove the Mounting Screws securing the Interface Board and then remove it.

6. Replace circuit boards as required and then install in reverse order.

# How To... Replace the Touch Screen Assembly

**Special Service Tools Required: NONE**

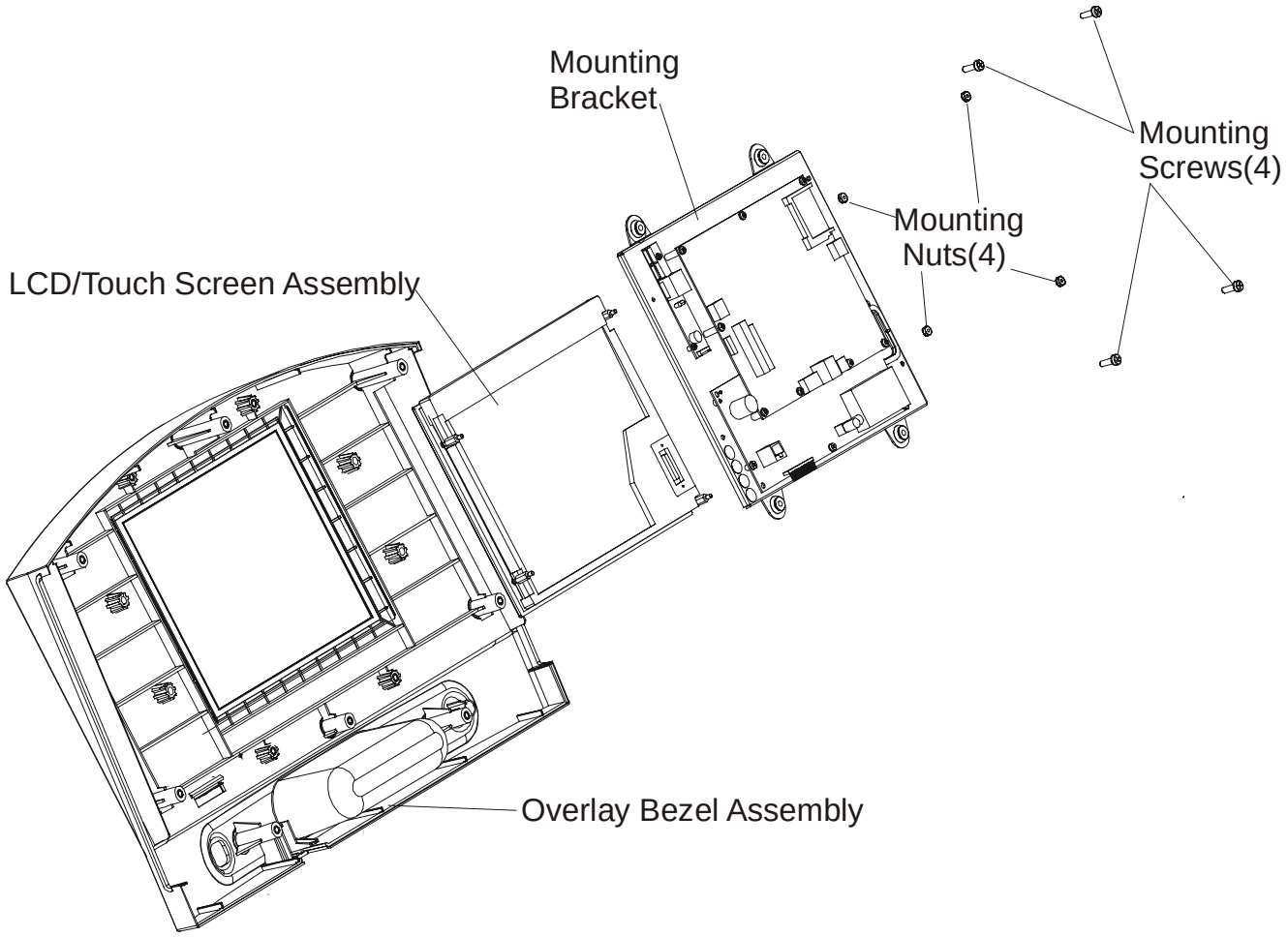


1. Remove eight Mounting Screws from the Back Cover of the Console. Lift the front half of the Console up enough to make appropriate electrical disconnects, and then lift off the Console.

2. Remove four Mounting Screws with Bushings that secure the LCD/Touch Screen assembly to the Overlay Bezel. Assembly.

3. Remove Four mounting nuts securing the LCD/Touch Screen assembly to the metal bracket

4. Remove the LCD/Touch Screen assembly from the Console.

5. Install new Screen in reverse order.

# SECTION IV

# ELECTRONIC OVERVIEW AND WIRING BLOCK DIAGRAM

**Page**

DISPLAY CONSOLE PCB ..... 3
MOTOR CONTROLLER PCB ..... 6
CAP BOARD ..... 8
WAX LIFT BOARD ..... 9
SMART STOP PCB ..... 13
FRAME TAG PCB ..... 14
LCD WAX LIFT PCB (ONLY) ..... 15
ELECTRONIC OVERVIEW – SBC ..... 19
ELECTRONIC OVERVIEW – INTERFACE BOARD ..... 20
DISPLAY CONSOLE PCB ..... 21
ELETRONIC OVERVIE – INVERTER BOARD ..... 23
BLOCK DIAGRAM CONSOLE ..... 24
ELECTRONIC OVERVIEW – BLOCK DIAGRAM WAX/LIFT ..... 25
BLOCK DIAGRAM MOTOR CONTROLLER CONFIGURATION 1 ..... 26
BLOCK DIAGRAM MOTOR CONTROLLER CONFIGURATION 2 ..... 27
BLOCK DIAGRAM CONFIGURATION CONSOLE LED ..... 28
BLOCK DIAGRAM CONFIGURATION WAX/LIFT BOARD ..... 29
BLOCK DIAGRAM POWER INPUT AND LINE FILTER ..... 30

**Note:**

# ELECTRONIC OVERVIEW - DISPLAY CONSOLE PCB

## Functional Description

The Display Console PCB is an intelligent display and keypad interface. It works in conjunction with the Wax/Lift Board, Motor Controller and Frame Tag Module. The console board reads the keypad input for user commands, refreshes the status LEDs, data display, profile display matrix. The Lifepulse circuitry reads analog voltages from the user hands and converts it into Digital signal for Lifepulse heart rate. The Console contains two RJ45 (C-SAFE) connectors to provide 8Volts .4 amp DC and C-Safe network interface.

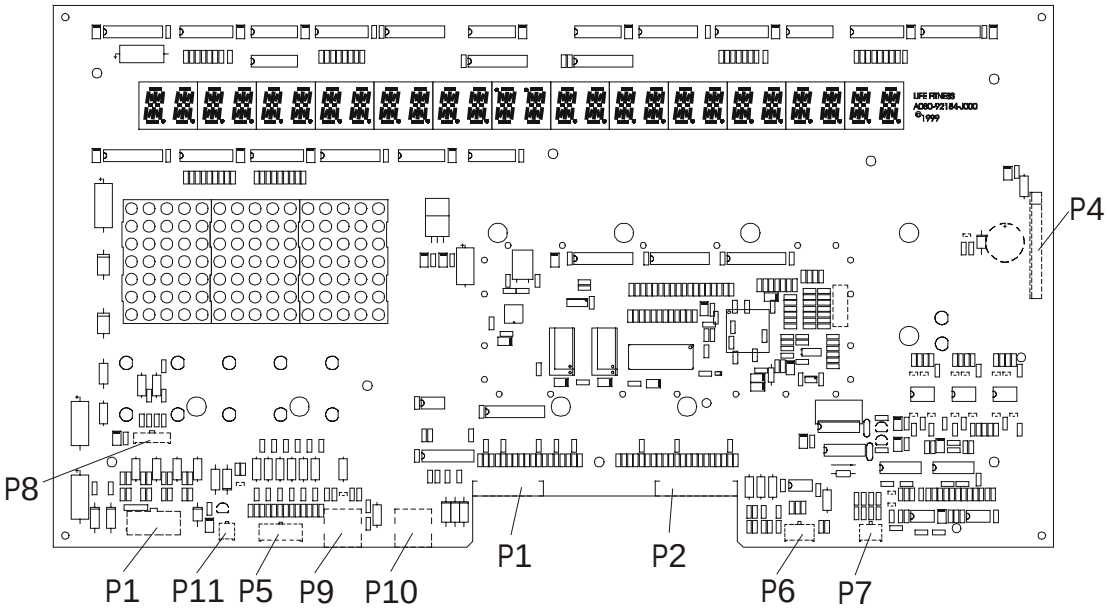


## Connector and Pin Functions

| Connector | Location | Pin | Functional Description |
|---|---|---|---|
| P1 is a 10 pin connector, which connects to the Wax/Lift PCB | 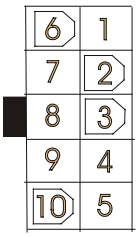 | 1 | GND - ground |
| | | 2 | GND - ground |
| | | 3 | +8Vdc - LEDs |
| | | 4 | +8Vdc - LEDs |
| | | 5 | Reed Sense - Relay No. 1 |
| | | 6 | TXD – transmit data |
| | | 7 | RXD – data received |
| | | 8 | Bus_Req (bus request) |
| | | 9 | +12Vdc – emergency stop switch |
| | | 10 | Relay Enable |
| | | | |
| P2 is a 12 pin ribbon connector, which connects to the Display Console Overlay | | 1 | ESD ground |
| | | 2 | Switch strobe 0 |
| | | 3 | Switch return 0 |
| | | 4 | Switch strobe 1 |
| | | 5 | Switch return 1 |
| | | 6 | Switch strobe 2 |
| | | 7 | Switch return 2 |
| | | 8 | Switch strobe 3 |
| | | 9 | Switch return 3 |
| | | 10 | Switch strobe 4 |
| | | 11 | Switch return 4 |
| | | 12 | ESD ground |

# ELECTRONIC OVERVIEW - DISPLAY CONSOLE PCB

| Connector | Location | Pin | Functional Description |
|---|---|---|---|
| P3 is a 10 pin ribbon connector, which connects to the Display Console Overlay | | 1 | ESD ground |
| | | 2 | Switch return 6 |
| | | 3 | Switch strobe 2 |
| | | 4 | Switch return 3 |
| | | 5 | Switch strobe 1 |
| | | 6 | Switch strobe 4 |
| | | 7 | Switch return 5 |
| | | 8 | Switch return 1 |
| | | 9 | Switch return 7 |
| | | 10 | ESD ground |
| | | | |
| P4 is an 18 pin connector, which connects to the Remote Console PCB 97Ti | 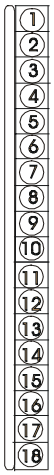 | 1 | D15 - ‘DP’ Segment Data |
| | | 2 | D14 - ‘G’ Segment Data |
| | | 3 | D13 - ‘F’ Segment Data |
| | | 4 | D12 - ‘E’ Segment Data |
| | | 5 | D11 - ‘D’ Segment Data |
| | | 6 | D10 - ‘C’ Segment Data |
| | | 7 | D9 - ‘B’ Segment Data |
| | | 8 | D8 - ‘A’ Segment Data |
| | | 9 | ST5 - Digit Strobe 5 |
| | | 10 | ST6 - Digit Strobe 6 |
| | | 11 | ST7 - Digit Strobe 7 |
| | | 12 | Key |
| | | 13 | ST8 - Digit Strobe 8 |
| | | 14 | ST9 - Digit Strobe 9 |
| | | 15 | ST10 - Digit Strobe 10 |
| | | 16 | ST11 - Digit Strobe 11 |
| | | 17 | +8Vdc (Not used) |
| | | 18 | Ground (Not used) |
| | | | |
| P5 is a 10 pin connector, which connects to the Serial Peripheral Interface Serial Communications Port | 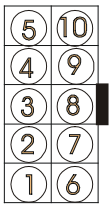 | 1 | MISO - master-in slave-out |
| | | 2 | MOSI - master-out slave-in |
| | | 3 | SCK - serial clock |
| | | 4 | N/U - not use |
| | | 5 | GND - ground |
| | | 6 | PCS1 - peripheral chip select 1 |
| | | 7 | PCS2 - peripheral chip select 2 |
| | | 8 | PCS3 - peripheral chip select 3 |
| | | 9 | Open Collector Output |
| | | 10 | +8Vdc |
| | | | |
| P6 is a 6 pin connector, which connects to the Polar Receiver and at the end of the Session Switch | 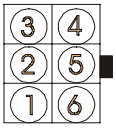 | 1 | +5Vdc |
| | | 2 | Polar signal |
| | | 3 | Ground |
| | | 4 | Stop Switch + |
| | | 5 | Stop Switch - |
| | | 6 | N/U |

# ELECTRONIC OVERVIEW - DISPLAY CONSOLE PCB

| Connector | Location | Pin | Functional Description |
|---|---|---|---|
| P7 is a 4 pin connector, which connects to the Lifepulse Electrodes | 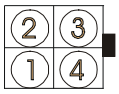  | 1 | Left + |
| | | 2 | Left - |
| | | 3 | Right - |
| | | 4 | Right + |
| | | | |
| P8 is a 4 pin connector, which connects to the Smart Stop Module | 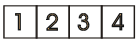  | 1 | Smart Stop Signal |
| | | 2 | Smart Stop Enable |
| | | 3 | +8Vdc |
| | | 4 | Ground |
| | | | |
| P9 and P10 are 8 pin connectors, which connect to the C-SAFE and Cardio Theater Interface | 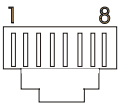  | 1 | N/U - not used |
| | | 2 | N/U - not used |
| | | 3 | Receive Data |
| | | 4 | Transmit Data |
| | | 5 | +8 Vdc |
| | | 6 | CTS |
| | | 7 | Ground |
| | | 8 | N/U - not used |
| | | | |
| P11 is a 2 pin connector, which connects to the Emergency Stop Switch | | 1 | Switch (-) |
| | | 2 | Switch +12Vdc |
| | | | |
| | | | |
| P14 is a 10 pin connector, which connects to the Background Debug Mode Signals | | 1 | /DS |
| | | 2 | /BERR |
| | | 3 | Ground |
| | | 4 | /BKPT /DSCLK |
| | | 5 | Ground |
| | | 6 | FREEZE/QUOT |
| | | 7 | /RESET |
| | | 8 | IPIPE1/DS1 |
| | | 9 | +5 Vdc |
| | | 10 | IPIPE0/DS0 |

# ELECTRONIC OVERVIEW – MOTOR CONTROLLER PCB

## FUNCTIONAL DESCRIPTION

The Motor Controller PCB is a single phase AC input PWM variable frequency three (3) phase AC output motor controller. Specifically the controller input is configured as a full wave bridge for 230 volt AC input, and as a voltage doubler for 120 volt AC input. The resultant DC bus voltage is processed through a microprocessor controlled six switch DC to AC inverter. The output is three phase power with pulse width modulation of both voltage and frequency.

**NOTE:** The motor controller design utilizes a 'hot' supply. This means the entire board will be at elevated potentials relative to earth ground any time the circuit is active. All measurements should be conducted with isolated equipment. Additionally there is considerable energy stored within the circuitry for up to 90 seconds after power is removed from the circuit. Personnel working with this equipment should be trained and adequate precautions should be used whenever working with this equipment.

# ELECTRONIC OVERVIEW – MOTOR CONTROLLER PCB

**LEDs, Test Points, and Jumpers**

| Description | Location | | Function |
|---|---|---|---|
| Service LED | LED1 | | 5 Vdc |
| | LED2 | | 14 Vdc |
| | LED3 | | Service LED |
| | | | |
| Test Point (TP) | TP1 | | 14 Vdc supplies relay power |
| | TP2 | | 5 Vdc system voltage |
| | TP3 | | Ground (GND) |
| | TP4 | | EPROM default |
| | TP5 | | Volts (motor parameters) |
| | | | |
| Jumper (JW) | JW1 | IN | Serial interface (If removed Error message "System Configured Two Wire" appears.) |
| | JW6 | OUT | Clears continuous error messages and displays EPPROM data |
| | JW7 | IN | Determines the wave form applied to the motor |

**Connector and Pin Functions**

| Connector | Location | Pin | Functional Description |
|---|---|---|---|
| P1 is a 3 pin connector, which connects to the AC inputs | 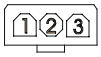 | 1 | 120/230 VAC input line |
| | | 2 | 120 VAC neutral/230Vac return |
| | | 3 | Earth ground connection |
| | | | |
| P2 is a 6 pin connector, which connects to the Output Motor | 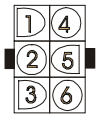 | 1 | Earth ground connection. |
| | | 2 | Motor phase W |
| | | 3 | Motor phase V |
| | | 4 | Motor phase U |
| | | 5 | Power connection: Motor thermal cutout |
| | | 6 | Power connection: Motor thermal cutout |
| | | | |
| P3 is a 6 pin connector, which connects to the Control Inputs | 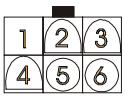 | 1 | 8VDC (Supplied by wax/lift board) |
| | | 2 | Ground (Console circuit ground) |
| | | 3 | Emergency stop switch ( |
| | | 4 | Bus request |
| | | 5 | Data receive |
| | | 6 | Data transmit |
| | | | |
| P4 is a 4 pin connector, which connects to the Power Factor Controller or Capacitor Board | 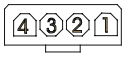 | 1 | Volt positive (PFC in) |
| | | 2 | Ground for motor controller circuit |
| | | 3 | Voltage doubler neutral - no connection for 230Vac or PFC |
| | | 4 | Volt positive (PFC out) |
| | | | |
| P5 is a 3 pin connector, which connects to the RPM Input | | 1 | Ground for Motor Controller circuit |
| | | 2 | 5VDC (VCC) |
| | | 3 | Speed sense input |
| | | | |
| P6 is a 10 pin connector, which connects to the Diagnostic Header Inputs.<br><br>Note: Pins 1 and 6 are located closest to P5 on the PCB. | | 1 | Serial output |
| | | 2 | Serial input |
| | | 3 | Secure input to 68HC08 processor |
| | | 4 | Ground for Motor Controller circuit |
| | | 5 | Bi-directional serial line |
| | | 6 | PTC4 input |
| | | 7 | Programming voltage input |
| | | 8 | DC voltage (+VD) |
| | | 9 | 5VDC (VCC) |
| | | 10 | 5VDC (VCC) |

# ELECTRONIC OVERVIEW – Cap Board

## Functional Description

The capacitor board provides the bus capacitance for a motor control board. A mid point of the capacitor bank is provided to allow for a voltage doubler configuration. Connection between output of AC input bridge rectifier and DC buss is made through the CAP board. Discharge resistance is also provided on this board

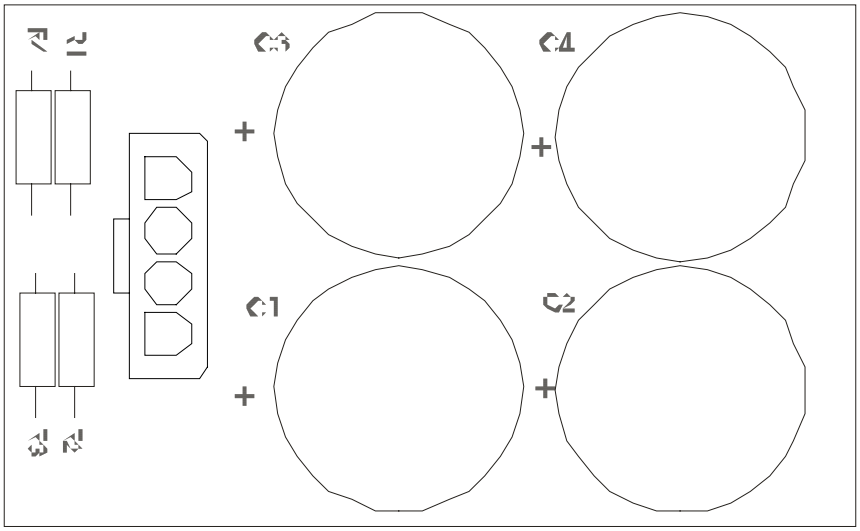


## Connector and Pin Functions

| Connector | Location | Pin | Functional Description |
|---|---|---|---|
| P1 is a 4 pin connector that connects to Motor Controller | | 1 | Input AC rectifier output |
| | | 2 | DC buss return |
| | | 3 | DC buss mid point |
| | | 4 | DC buss |

# ELECTRONIC OVERVIEW - WAX LIFT PCB

## LEDs, Relays, Test Points, and Jumpers

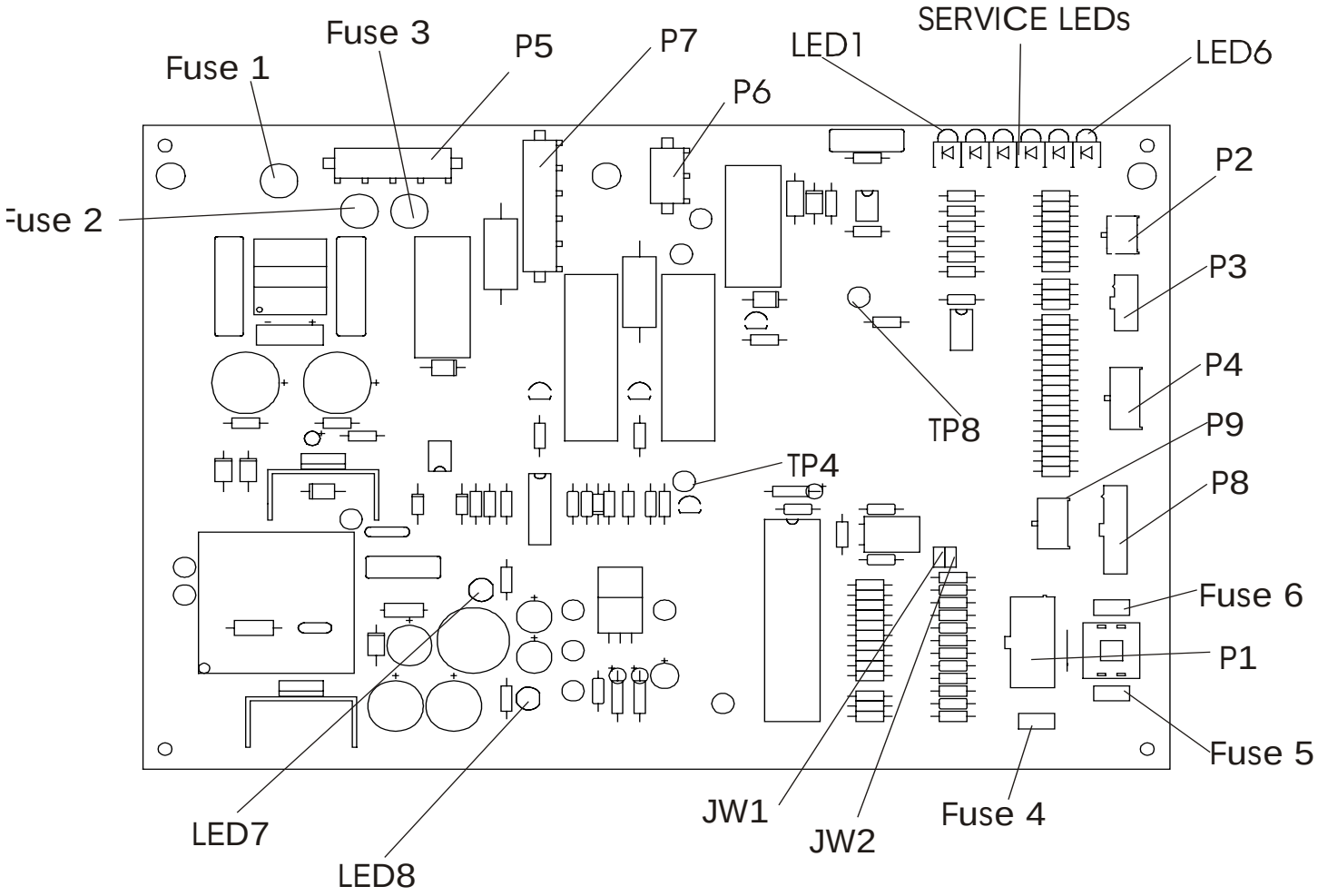


## Functional Description

The Wax /Lift /Power Supply Board acts as a junction board which interfaces with the:

- Display Console,
- Frame Tag,
- Home Switch TR93/95
  0% Switch and Frame Switch TR97
- Lift Motor,
- Wax Motor
- Power Supply

# ELECTRONIC OVERVIEW - WAX LIFT PCB

| Description | Location | Function | |
|---|---|---|---|
| Service LED | LED1 | Flashes when the control processor and the main processor are running. (Console board) | |
| | LED2 | ON when lift motor is going up | |
| | LED3 | ON when lift motor is going down | |
| | LED4 | ON when 0% switch is closed | 4 & 5 on when at 0% on 93Ti & 95Ti only. |
| | LED5 | ON when bottom limit switch is engaged | |
| | LED6 | Flashes when Control UP is running | |
| | LED7 | Green indicates that +12V output is ON | |
| | LED8 | Red indicates that +8V output is ON | |
| | | | |
| FUSES | FUSE 1 | 2 Amp 120 Volt AC supply for low voltage power supply | |
| | FUSE 2 | 4 Amp 120 Volt AC supply power for wax pump and lift motor | |
| | FUSE 3 | 4 Amp 120 Volt AC supply power for wax pump and lift motor | |
| | FUSE 4 | .5 Amp 12 Volt Dc supply to console Emergence stop switch | |
| | FUSE 5 | 1 Amp 8 Volt Dc (Supply power to console electronics, Smart stop, and C-safe (RJ45 connector)) | |
| | FUSE 6 | 1 Amp 8 Volt Dc (Supply to console CPU) | |
| | | | |
| Relay Switch | Relay 1 and 2 | Drives Lift Motor | |
| | Relay 3 (12Vdc coil) | Drives Wax Pump | |
| | Relay 4 (12Vdc coil): | Relay 4 supplies AC input to the Wax/Lift Circuit | |
| | | | |
| Test Point (TP) | TP1 | Ground (GND) | |
| | TP2 | 8vDC | |
| | TP3 | 12vDC | |
| | TP4 | 5vDC | |
| | TP5 | Line voltage (neutral) | |
| | TP6 | Line voltage (hot wire) | |
| | TP7 | 5vDC (voltage regulator) | |
| | TP8 | Line frequency test (wax motor must be OFF) | |
| | TP9 | N/U - not used | |
| | TP10 | Ground (GND) | |
| | TP11 | Rectifier output (POS) | |
| | TP12 | Rectifier output (NEG) | |
| | | | |
| Jumper (JW) | JW1 | One(1) wire system | |
| | JW2 | Two(2) wire system | |

## Connector and Pin Functions

| Connector | Location | Pin | Functional Description |
|---|---|---|---|
| P1 is a 10 pin connector, which connects to the Console | 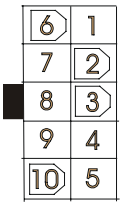 | 1 | Ground |
| | | 2 | Ground |
| | | 3 | +8VDC |
| | | 4 | +8VDC |
| | | 5 | NC |
| | | 6 | RXD |
| | | 7 | TXD |
| | | 8 | BUS request |
| | | 9 | +12Vdc |
| | | 10 | Pin relay |
| | | | |
| P2 is a 4 pin connector, which connects to the Lift Motor | 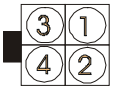 | 1 | 0 position |
| | | 2 | Ground |
| | | 3 | Bottom |
| | | 4 | Ground |
| | | | |
| P3 is a 3 pin connector, which is not applicable | 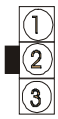 | 1 | N/U - not used |
| | | 2 | N/U - not used |
| | | 3 | N/U - not used |
| | | | |
| P4 is a 8 pin connector, which connects to the Frame Tag PCB | 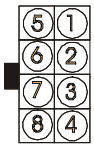 | 1 | +5VDC (VCC) |
| | | 2 | Ground |
| | | 3 | MISO |
| | | 4 | MOSI |
| | | 5 | SCK |
| | | 6 | NC |
| | | 7 | CS |
| | | 8 | CE |

# ELECTRONIC OVERVIEW - WAX LIFT PCB

| Connector | Location | Pin | Functional Description |
|---|---|---|---|
| P5 is a 3 pin connector, which connects to the AC Input | 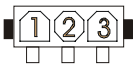 | 1 | Hot (120 VAC) |
| | | 2 | Neutral |
| | | 3 | Ground |
| | | | |
| P6 is a 2 pin connector, which connects to the Wax Pump | 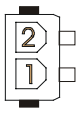 | 1 | Neutral |
| | | 2 | Hot (120 VAC) |
| | | | |
| P7 is a 4 pin connector, which connects to the Lift Motor | 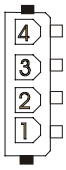 | 1 | Down |
| | | 2 | Hot (120 VAC) |
| | | 3 | Up |
| | | 4 | Ground |
| | | | |
| P8 is a 5 pin connector, which connects to the Life Link Board | 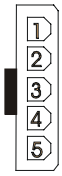 | 1 | +8Vdc |
| | | 2 | Ground |
| | | 3 | Bus request |
| | | 4 | Receive data |
| | | 5 | Transmit data |
| | | | |
| P9 is a 6 pin connector, which connects to the Motor Control Board | 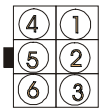 | 1 | +8Vdc |
| | | 2 | Ground |
| | | 3 | Pin Relay |
| | | 4 | Bus Request |
| | | 5 | Receive data |
| | | 6 | Transmit data |

# ELECTRONIC OVERVIEW – SMART STOP PCB

## Functional Description (97Ti and 95Ti)

The Smart Stop PCB is designed to sense the presence of a user on the treadmill deck and reset the treadmill if a user is not detected. An infrared light is transmitted twice a second and then is reflected by the user. The light is then detected by the receiver module. The treadmill console controls the **Enable** pulse and reads the output of the receiver module.

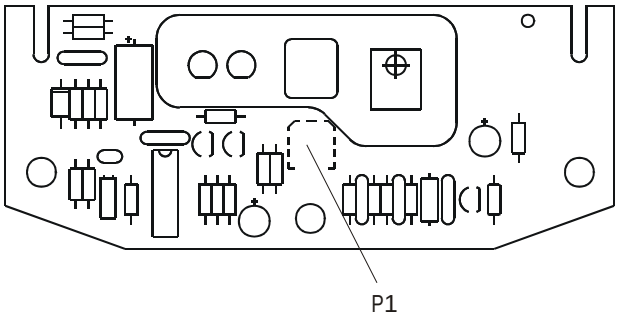


## Connector and Pin Functions

| Connector | Location | Pin | Functional Description |
|---|---|---|---|
| P1 is a 4 pin connector, which connects to the Display PCB | 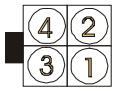 | 1 | Ground |
| | | 2 | +8Vdc |
| | | 3 | Enable Input Active |
| | | 4 | U_Detect Output Pulsed Active Low |

# ELECTRONIC OVERVIEW – FRAME TAG PCB

## Functional Description

The Frame Tag board identifies the unit track from date of manufacture and provides a place to record information significant to the history of the unit.

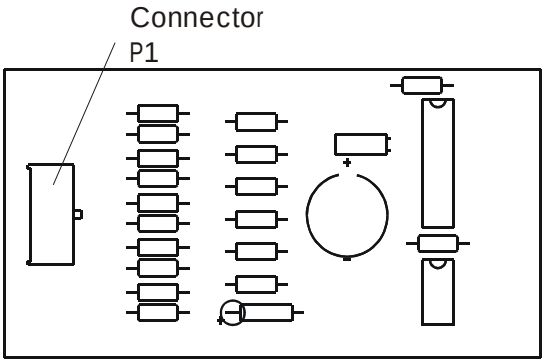


## Connector and Pin Functions

| Connector | Location | Pin | Functional Description |
|---|---|---|---|
| P1 is an 8 pin connector, which connects to the Frame Tag PCB | 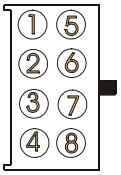 | 1 | VCC - +5 Vdc |
| | | 2 | GND - ground |
| | | 3 | MISO - master-in slave-out |
| | | 4 | MISI - master-in slave-in |
| | | 5 | SCK - serial clock |
| | | 6 | NU - not used |
| | | 7 | CS - chip select |
| | | 8 | CE - chip enabled |

# ELECTRONIC OVERVIEW – LCD WAX LIFT PCB (only)

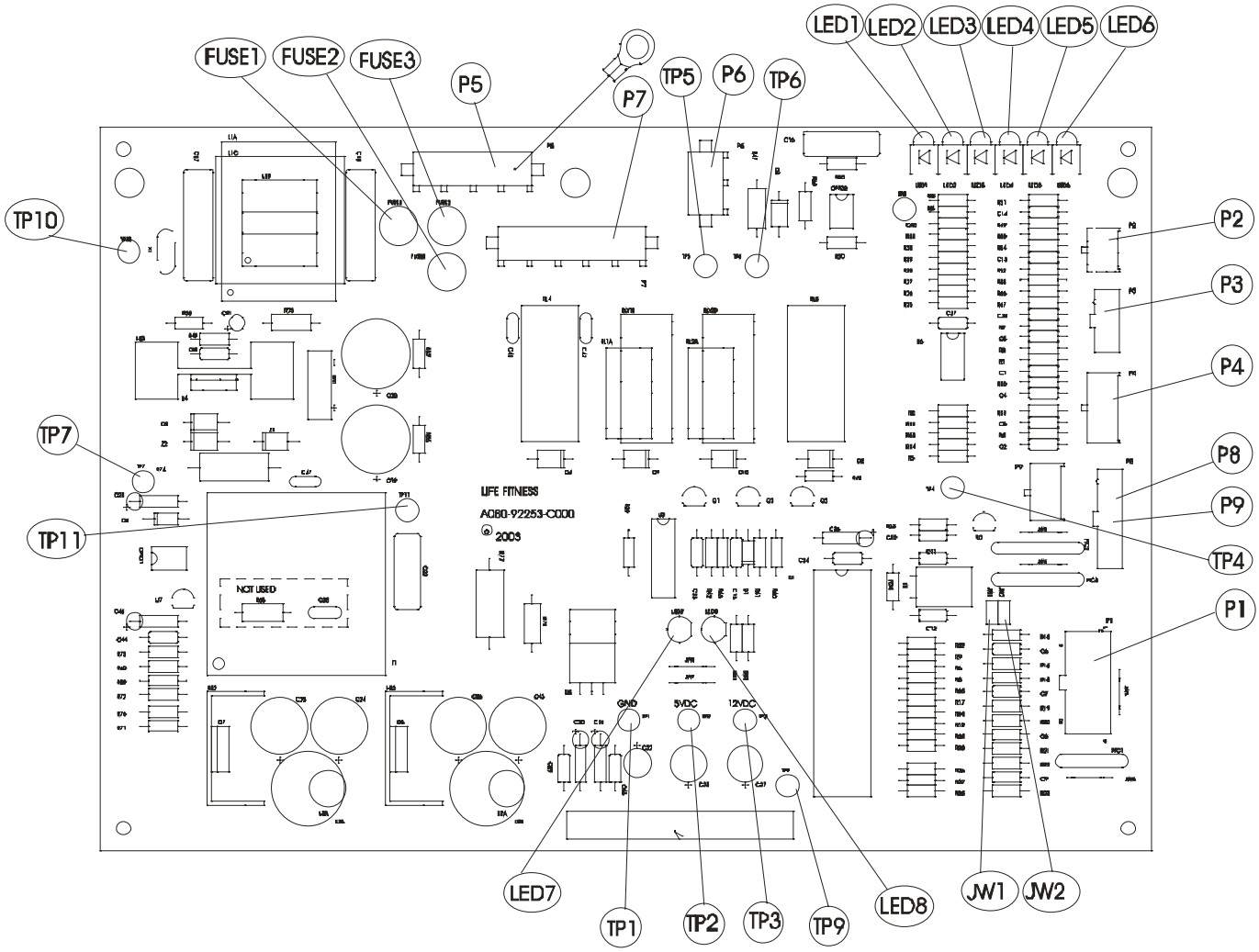


## LEDs, Relays, Test Points, and Jumpers

## Functional Description

The Wax /Lift /Power Supply Board acts as a junction board which interfaces with the:

- Display Console,
- Frame Tag,
- Home Switch TR93/95
  0% Switch and Frame Switch TR97
- Lift Motor,
- Wax Motor
- Power Supply

# ELECTRONIC OVERVIEW - LCD WAX LIFT PCB (only)

| Description | Location | Function | |
|---|---|---|---|
| Service LED | LED1 | Flashes when the control processor and the main processor are running. (Console board) | |
| | LED2 | ON when lift motor is going up | |
| | LED3 | ON when lift motor is going down | |
| | LED4 | ON when 0% switch is closed | 4 & 5 on when at 0% on 93Ti & 95Ti only. |
| | LED5 | ON when bottom limit switch is engaged | |
| | LED6 | Flashes when Control UP is running | |
| | LED7 | Green indicates that +12V output is ON | |
| | LED8 | Red indicates that +8V output is ON | |
| | | | |
| FUSES | FUSE 1 | 2 Amp 120 Volt AC supply for low voltage power supply | |
| | FUSE 2 | 4 Amp 120 Volt AC supply power for wax pump and lift motor | |
| | FUSE 3 | 4 Amp 120 Volt AC supply power for wax pump and lift motor | |
| | | | |
| Relay Switch | Relay 1 and 2 | Drives Lift Motor | |
| | Relay 3 (12Vdc coil) | Drives Wax Pump | |
| | Relay 4 (12Vdc coil): | Relay 4 supplies AC input to the Wax/Lift Circuit | |
| | | | |
| Test Point (TP) | TP1 | Ground (GND) | |
| | TP2 | 5vDC | |
| | TP3 | 12vDC | |
| | TP4 | 5vDC | |
| | TP5 | Line voltage (neutral) | |
| | TP6 | Line voltage (hot wire) | |
| | TP7 | 5vDC (voltage regulator) | |
| | TP8 | Line frequency test (wax motor must be OFF) | |
| | TP9 | N/U - not used | |
| | TP10 | Ground (GND) | |
| | TP11 | Rectifier output (POS) | |
| | TP12 | Rectifier output (NEG) | |
| | | | |
| Jumper (JW) | JW1 | One(1) wire system | |
| | JW2 | Two(2) wire system | |

## Connector and Pin Functions

| Connector | Location | Pin | Functional Description |
|---|---|---|---|
| P1 is a 10 pin connector, which connects to the Console | 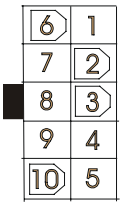 | 1 | Ground |
| | | 2 | Ground |
| | | 3 | +5VDC |
| | | 4 | +5VDC |
| | | 5 | +12Vdc |
| | | 6 | RXD |
| | | 7 | TXD |
| | | 8 | BUS request |
| | | 9 | +12Vdc |
| | | 10 | Pin relay |
| | | | |
| P2 is a 4 pin connector, which connects to the Lift Motor | 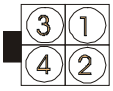 | 1 | 0 position |
| | | 2 | Ground |
| | | 3 | Bottom |
| | | 4 | Ground |
| | | | |
| P3 is a 3 pin connector, which is not applicable | 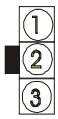 | 1 | N/U - not used |
| | | 2 | N/U - not used |
| | | 3 | N/U - not used |
| | | | |
| P4 is a 8 pin connector, which connects to the Frame Tag PCB | 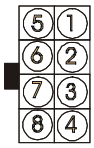 | 1 | +5VDC (VCC) |
| | | 2 | Ground |
| | | 3 | MISO |
| | | 4 | MOSI |
| | | 5 | SCK |
| | | 6 | NC |
| | | 7 | CS |
| | | 8 | CE |

| Connector | Location | Pin | Functional Description |
|---|---|---|---|
| P5 is a 3 pin connector, which connects to the AC Input | 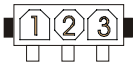 | 1 | Hot (120 VAC) |
| | | 2 | Neutral |
| | | 3 | Ground |
| | | 4 | Ground |
| | | | |
| P6 is a 2 pin connector, which connects to the Wax Pump | 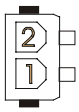 | 1 | Neutral |
| | | 2 | Hot (120 VAC) |
| | | | |
| P7 is a 4 pin connector, which connects to the Lift Motor | 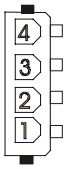 | 1 | Down |
| | | 2 | Hot (120 VAC) |
| | | 3 | Up |
| | | 4 | Ground |
| | | | |
| P8 is a 5 pin connector, which connects to the Life Link Board | 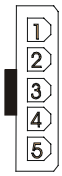 | 1 | +8Vdc |
| | | 2 | Ground |
| | | 3 | Bus request |
| | | 4 | Receive data |
| | | 5 | Transmit data |
| | | | |
| P9 is a 6 pin connector, which connects to the Motor Control Board | 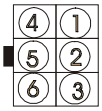 | 1 | +12Vdc |
| | | 2 | Ground |
| | | 3 | Pin Relay |
| | | 4 | Bus Request |
| | | 5 | Receive data |
| | | 6 | Transmit data |

# ELECTRONIC OVERVIEW – SBC

Single board Computer

## ELECTRONIC OVERVIEW – Interface Board

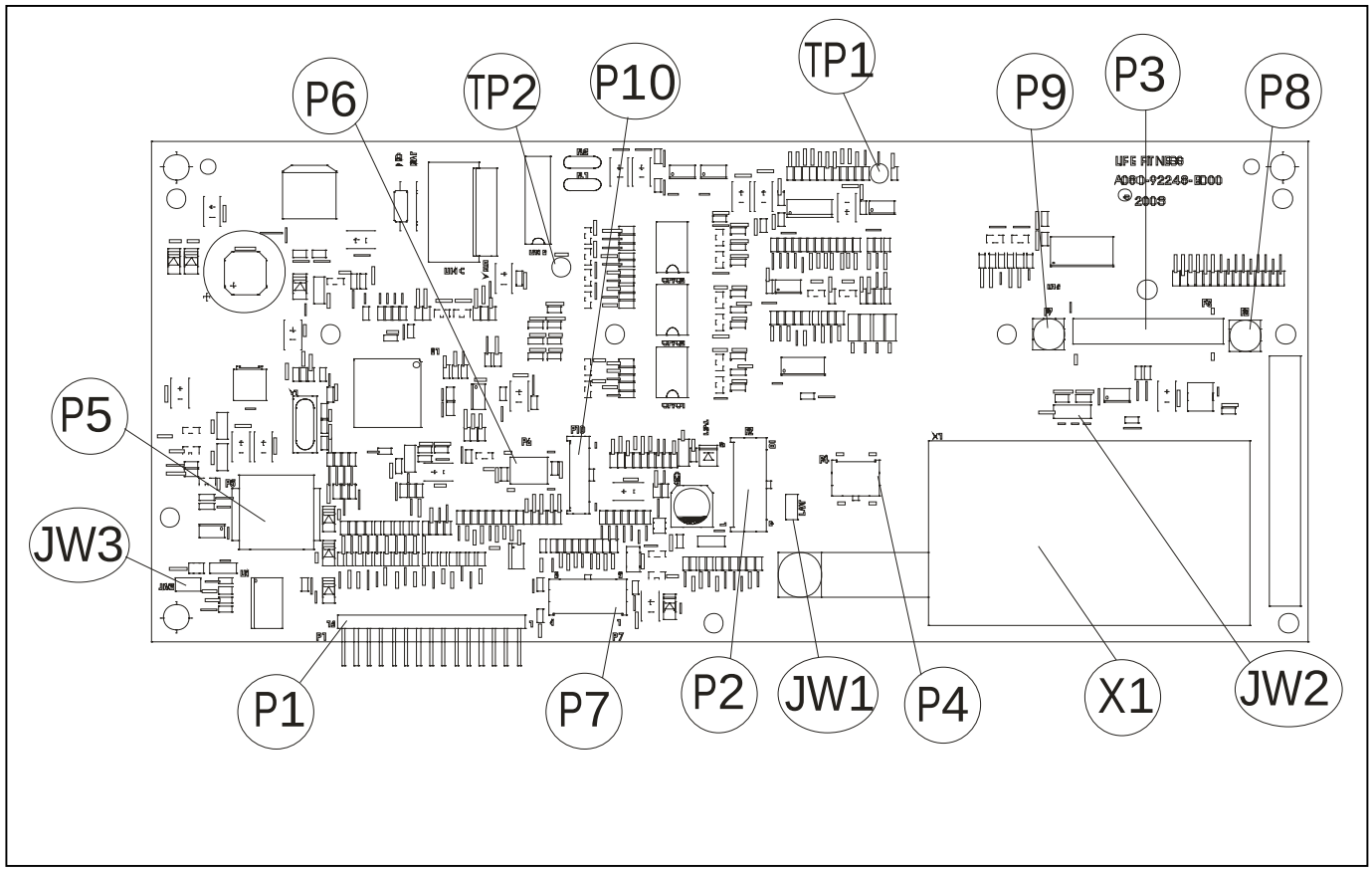

## Connector and Pin Functions

| Connector | Location | Pin | Functional Description |
|---|---|---|---|
| P2 is a 10 pin connector, which connects to the Wax/Lift PCB | 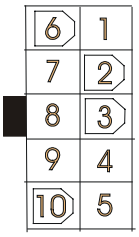 | 1 | GND - ground |
| | | 2 | GND - ground |
| | | 3 | |
| | | 4 | |
| | | 5 | |
| | | 6 | TXD – transmit data |
| | | 7 | RXD – data received |
| | | 8 | Bus_Req (bus request) |
| | | 9 | +12Vdc – emergency stop switch |
| | | 10 | Relay Enable |
| | | | |
| P1 is a 14 pin ribbon connector, which connects to the key pad. | | 1 | |
| | | 2 | |
| | | 3 | |
| | | 4 | |
| | | 5 | |
| | | 6 | |
| | | 7 | |
| | | 8 | |
| | | 9 | |
| | | 10 | |
| | | 11 | |
| | | 12 | |
| | | 13 | |
| | | 14 | |

# ELECTRONIC OVERVIEW - DISPLAY CONSOLE PCB

| Connector | Location | Pin | Functional Description |
|---|---|---|---|
| | | | |
| P3 is an 24 pin connector, which connects the interface board to the Single Board computer. | | 1 | RS232_HC12 RxD |
| | | 2 | RS232_HC12 TxD |
| | | 3 | RS232_CSAFE_CTS |
| | | 4 | RS232_CSAFE RxD |
| | | 5 | RS232_CSAFE Txd |
| | | 6 | PON_SLEEP |
| | | 7 | PON_AND |
| | | 8 | HC12 WAKEUP_PULSE |
| | | 9 | GROUND |
| | | 10 | GROUND |
| | | 11 | Px_WAKE_PULSE |
| | | 12 | X_RESET |
| | | 13 | GP10-0 |
| | | 14 | GP10-1 |
| | | 15 | GP10-2 |
| | | 16 | FE_OUT |
| | | 17 | GROUND |
| | | 18 | GROUND |
| | | 19 | GROUND |
| | | 20 | TUNER_SDA |
| | | 21 | TUNER_SCL |
| | | 22 | TUNER_GND |
| | | 23 | TUNER_5V |
| | | 24 | TUNER_GND |
| | | | |
| P8 VIDEO which connects the interface board to the Single Board computer. | | 1 | VID_OUT |
| | | 2 | GND |
| | | | |
| P9 2nd_IF which connects the interface board to the Single Board computer. | | 1 | 2nd_IF |
| | | 2 | GND |
| | | | |
| P7 is a 6 pin connector, which connects to the Polar Receiver and at the end of the Session Switch | 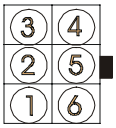  | 1 | +5Vdc VCC |
| | | 2 | NC |
| | | 3 | +5Vdc VCC |
| | | 4 | Ground |
| | | 5 | ESTOP |
| | | 6 | NU |
| | | 7 | Test Mode |
| | | 8 | Polar Signal |

# ELECTRONIC OVERVIEW - DISPLAY CONSOLE PCB

| Connector | Location | Pin | Functional Description |
|---|---|---|---|
| P4 is a 4 pin connector, which connects to the Lifepulse Electrodes | 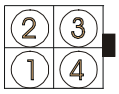  | 1 | Right - Ground |
| | | 2 | Left - Ground |
| | | 3 | Left + |
| | | 4 | Right + |
| | | | |
| P10 is a 4 pin connector, which connects to the Smart Stop Module | 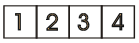  | 4 | Smart Stop Signal |
| | | 3 | Smart Stop Enable |
| | | 2 | +8Vdc |
| | | 1 | Ground |
| | | | |
| P5are 8 pin connectors, which connect to the C-SAFE and Cardio Theater Interface | 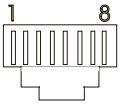  | 1 | N/U - not used |
| | | 2 | N/U - not used |
| | | 3 | Receive Data |
| | | 4 | Transmit Data |
| | | 5 | +8 Vdc |
| | | 6 | CTS |
| | | 7 | Ground |
| | | 8 | N/U - not used |
| | | | |
| P11 is a 2 pin connector, which connects to the Emergency Stop Switch | | 1 | Switch (-) |
| | | 2 | Switch +12Vdc |
| | | | |
| | | | |
| P6 is a 10 pin connector, which connects to the Background Debug Mode Signals | | 1 | |
| | | 2 | |
| | | 3 | |
| | | 4 | |
| | | 5 | |
| | | 6 | |
| | | 7 | |
| | | 8 | |
| | | 9 | |
| | | 10 | |

# ELECTRONIC OVERVIEW – Inverter Board

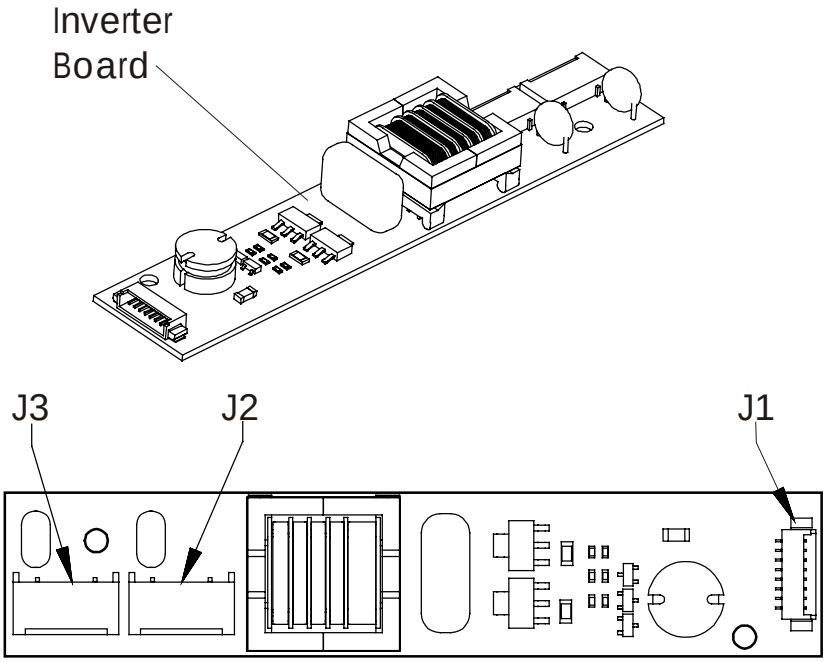


| CONNECTOR | PIN | FUNCTION | VOLTAGE |
|---|---|---|---|
| J1 | 1 | Vin | 12 Volts DC |
| | 2 | Vin | 12 Volts DC |
| | 3 | Ground | Ground |
| | 4 | Ground | Ground |
| | 5 | Enable | 0-5 Volts DC |
| | 6 | N/C | N/C |
| | 7 | N/C | N/C |
| | 8 | N/C | N/C |
| | | | |
| J2 | 1 | AC-out | 1500 VAC Unload<br>550 VAC Loaded |
| | 2 | AC-com | - |
| | | | |
| J3 | 1 | AC-out | 1500 VAC Unload<br>550 VAC Loaded |
| | 2 | AC-com | - |

# ELECTRONIC OVERVIEW – BLOCK DIAGRAM CONSOLE

All version treads except LCD treads

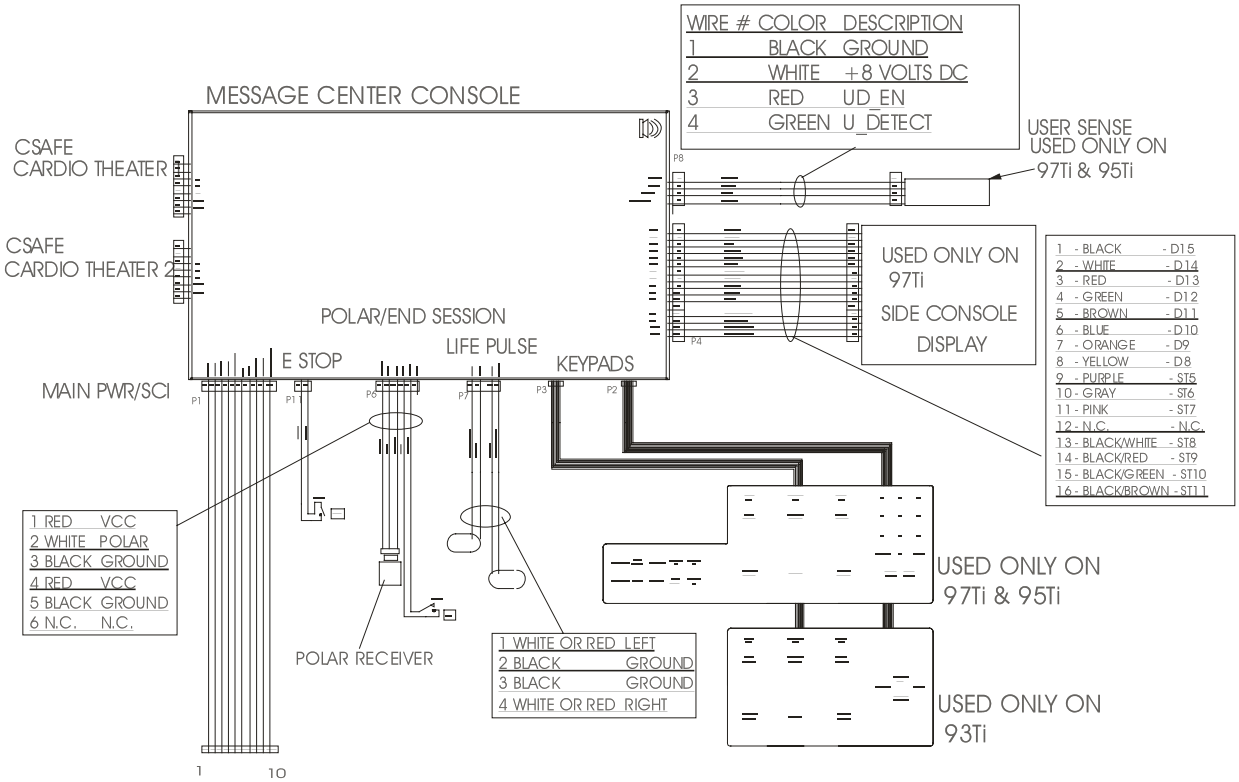


| WIRE # | COLOR | DESCRIPTION |
|---|---|---|
| 1 | YELLOW | GROUND |
| 2 | ORANGE | GROUND |
| 3 | BROWN | +8 VOLTS DC |
| 4 | RED | +8 VOLTS DC |
| 5 | BLUE | REED SENSE |
| 6 | PURPLE | TXD |
| 7 | GREEN | RXD |
| 8 | GRAY | BUS_REQ |
| 9 | WHITE | +12 VOLTS DC |
| 10 | BLACK | RELAY ENABLE |

# ELECTRONIC OVERVIEW – BLOCK DIAGRAM WAX / LIFT

All version treads except LCD treads

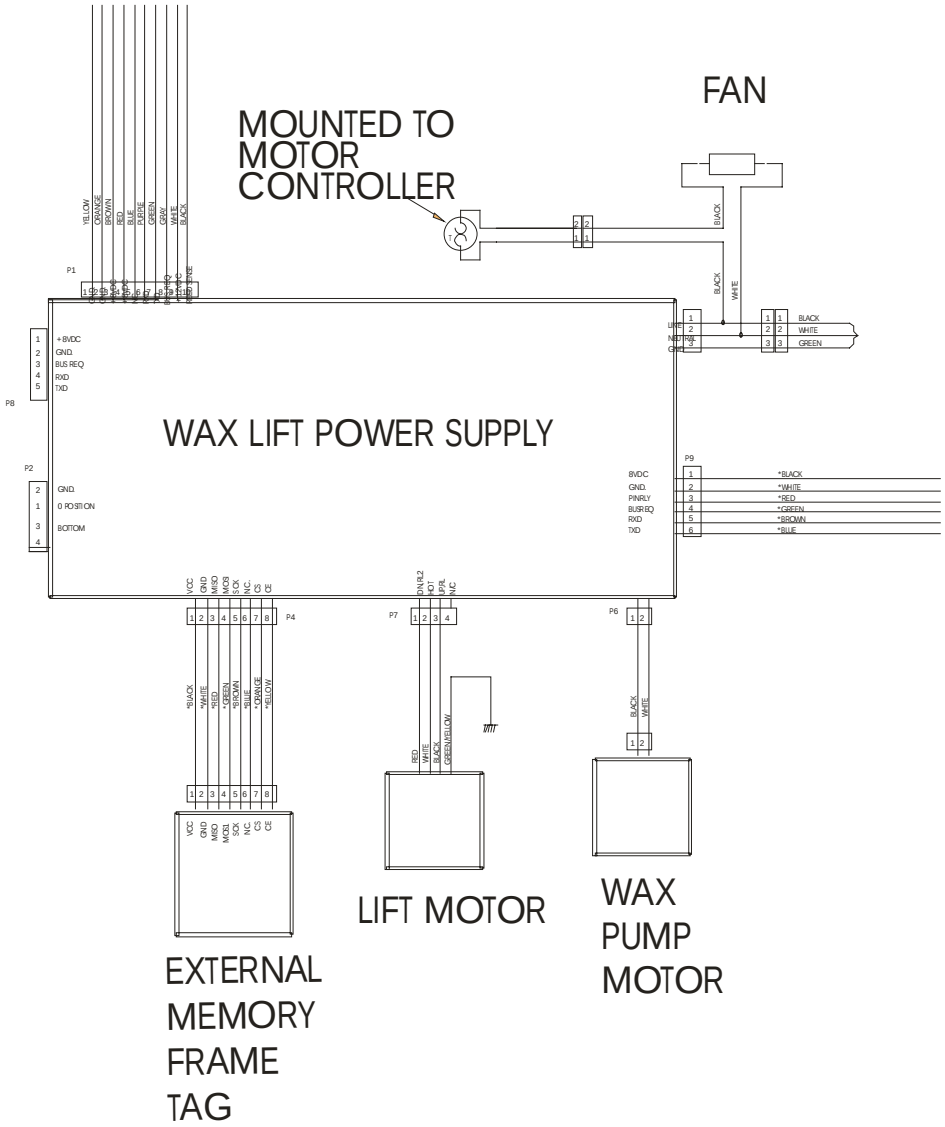


Used only on the 93T and 95Ti

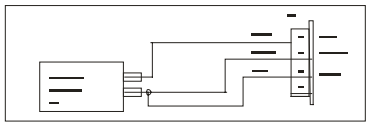

Used only on the 97Ti

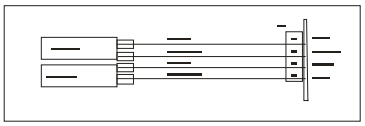

# ELECTRONIC OVERVIEW – BLOCK DIAGRAM
# MOTOR CONTROLLER CONFIGURATION 1

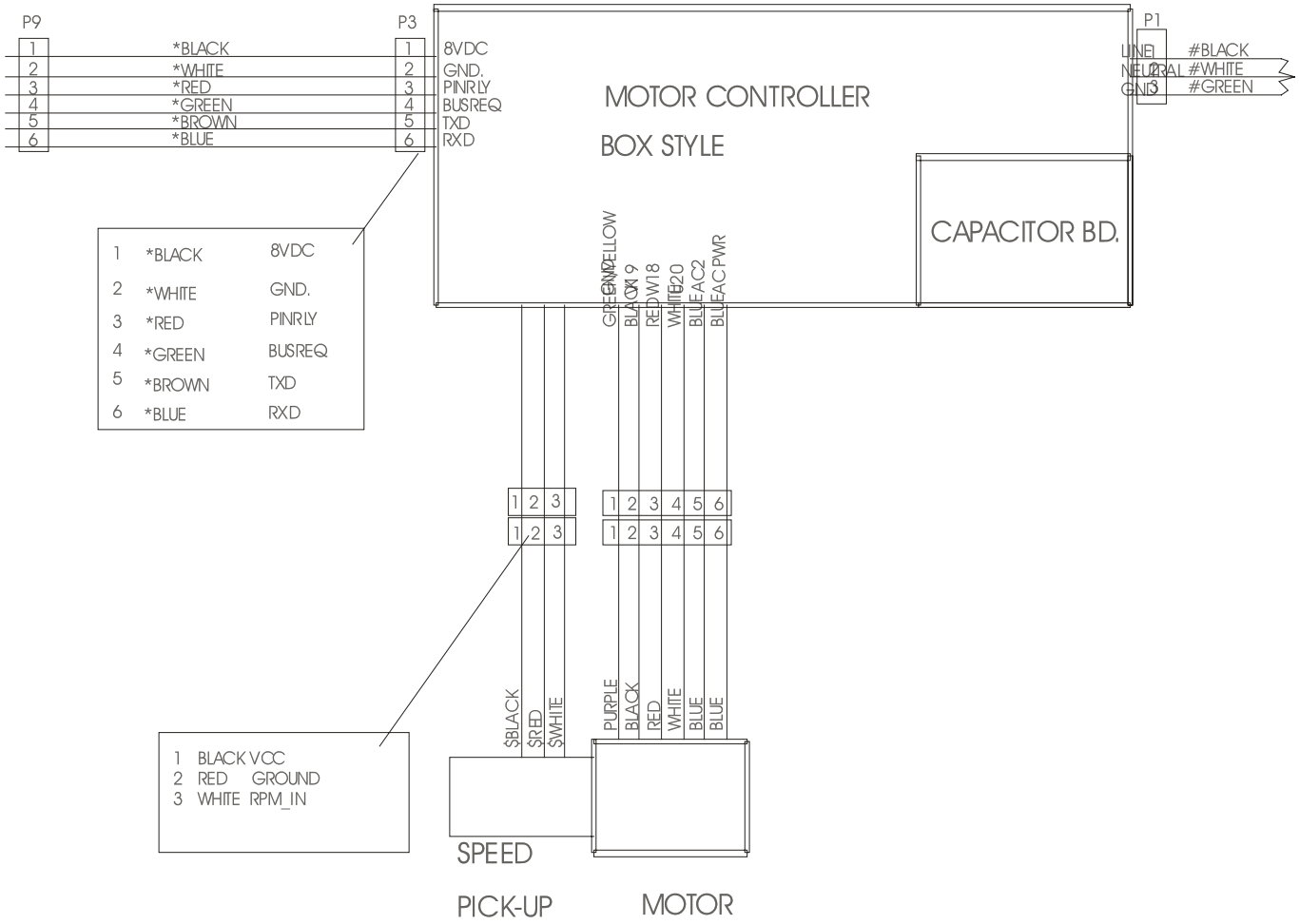

# ELECTRONIC OVERVIEW – BLOCK DIAGRAM
# MOTOR CONTROLLER CONFIGURATION 2

Motor controller configuration 2 is used on all LCD version Treadmills and 93T, 95Ti and 97Ti -02 version treads.

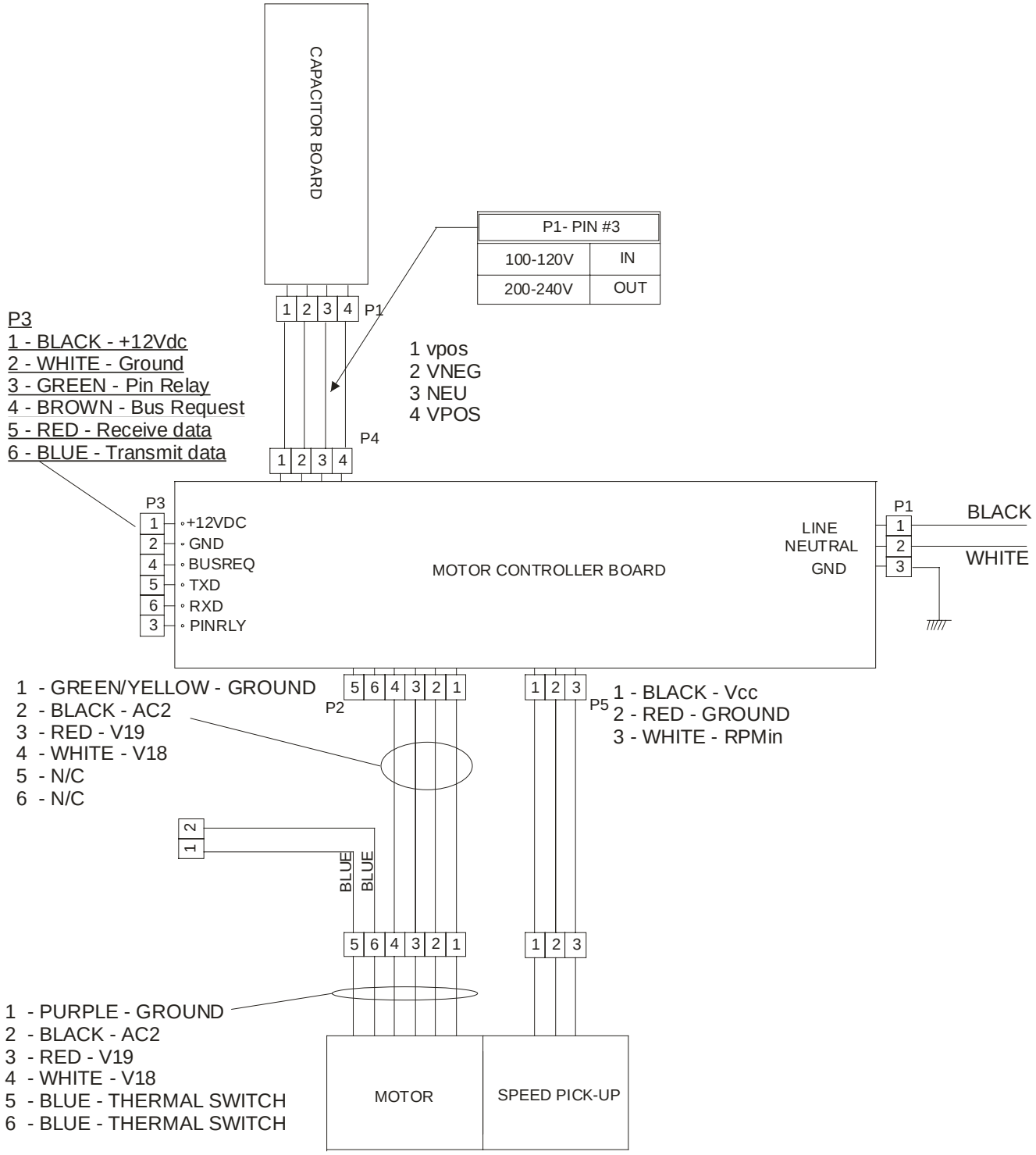

# ELECTRONIC OVERVIEW – BLOCK DIAGRAM CONFIGURATION Console LCD

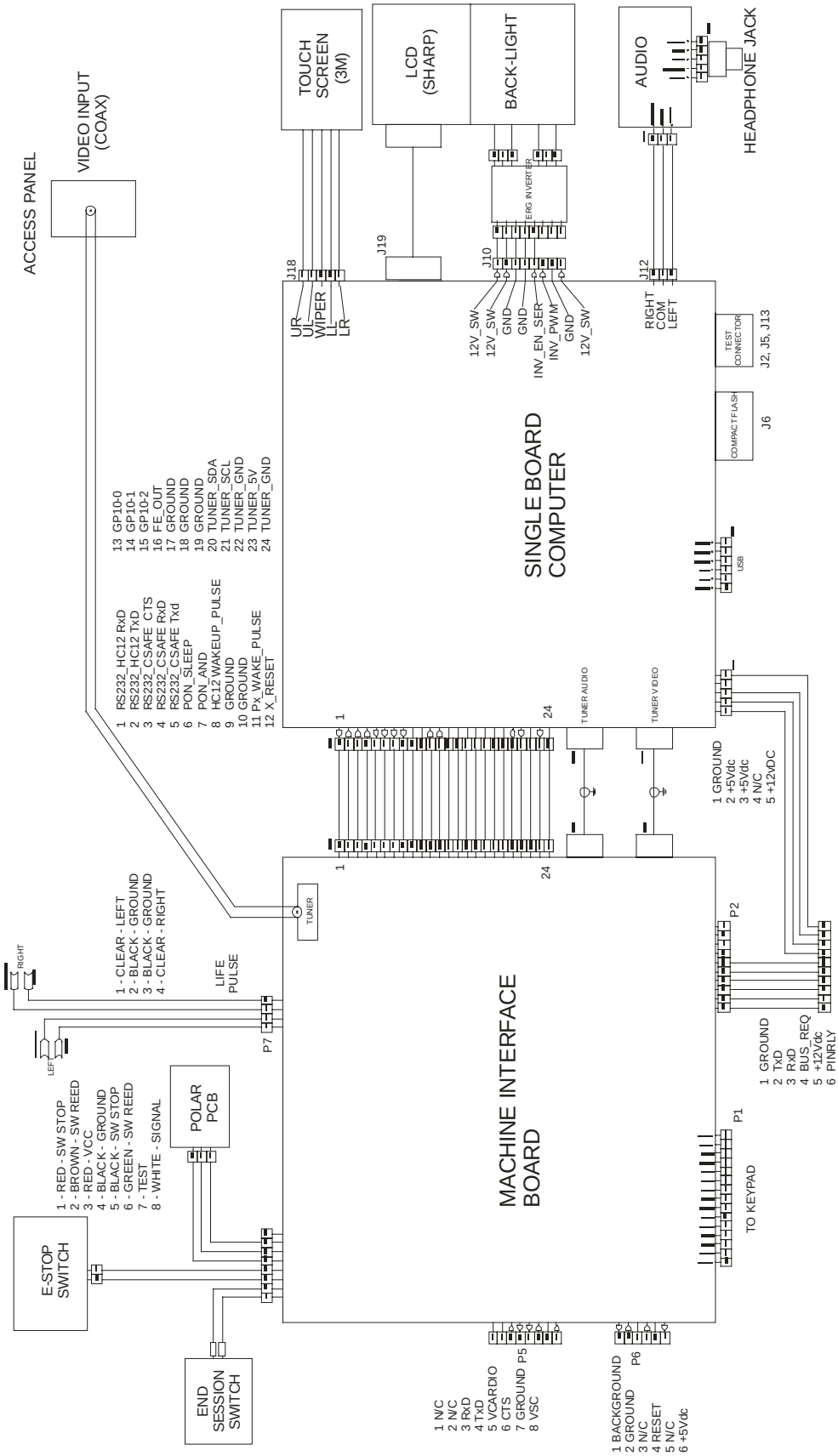

# ELECTRONIC OVERVIEW – BLOCK DIAGRAM CONFIGURATION Wax/Lift Board LCD

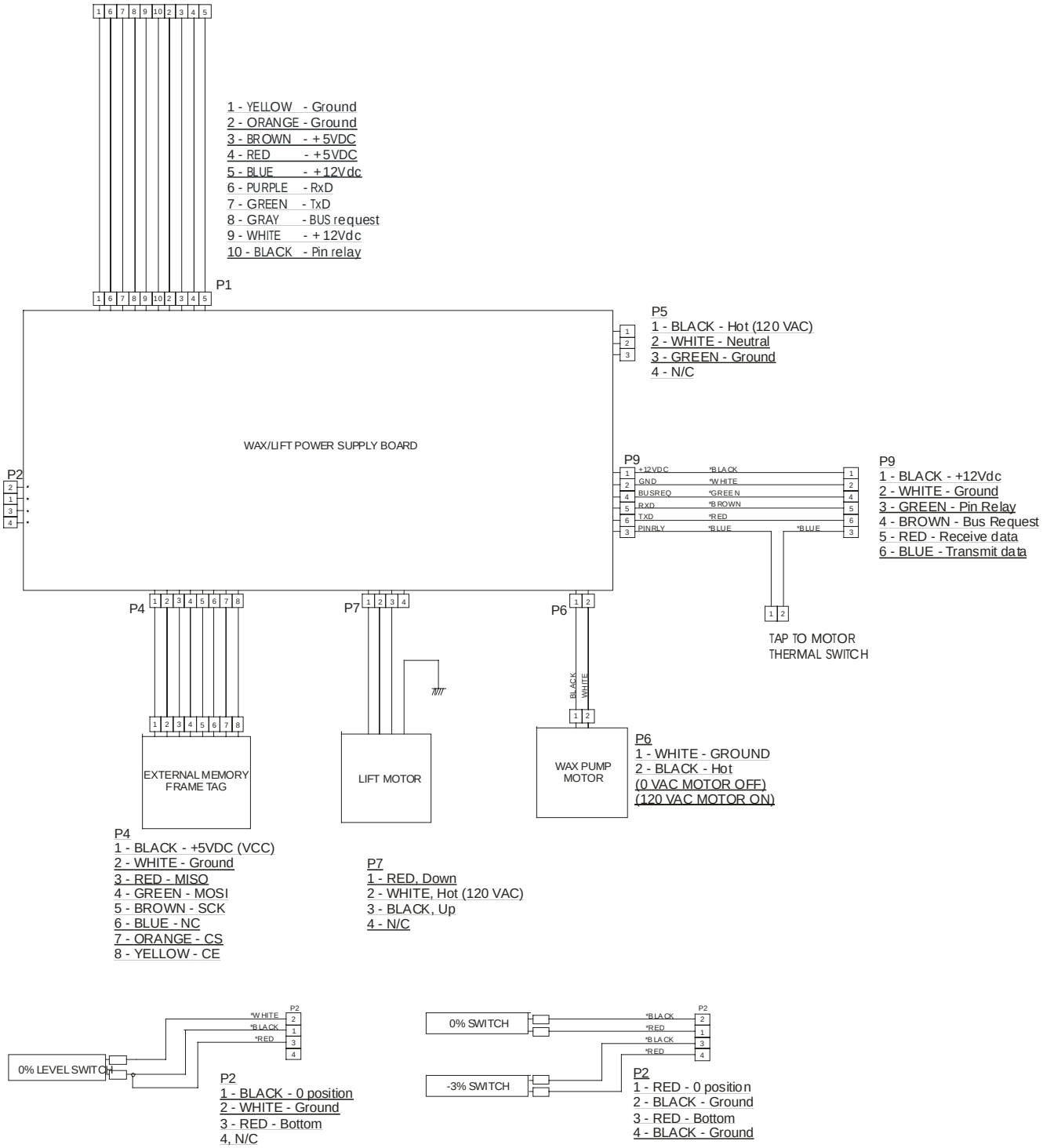

# ELECTRONIC OVERVIEW – BLOCK DIAGRAM
# POWER INPUT AND LINE FILTER

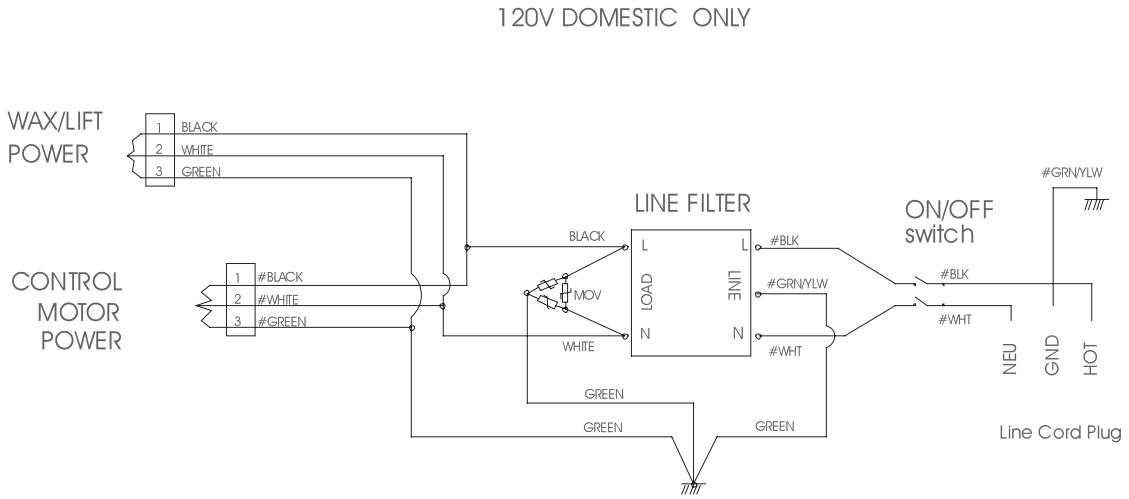


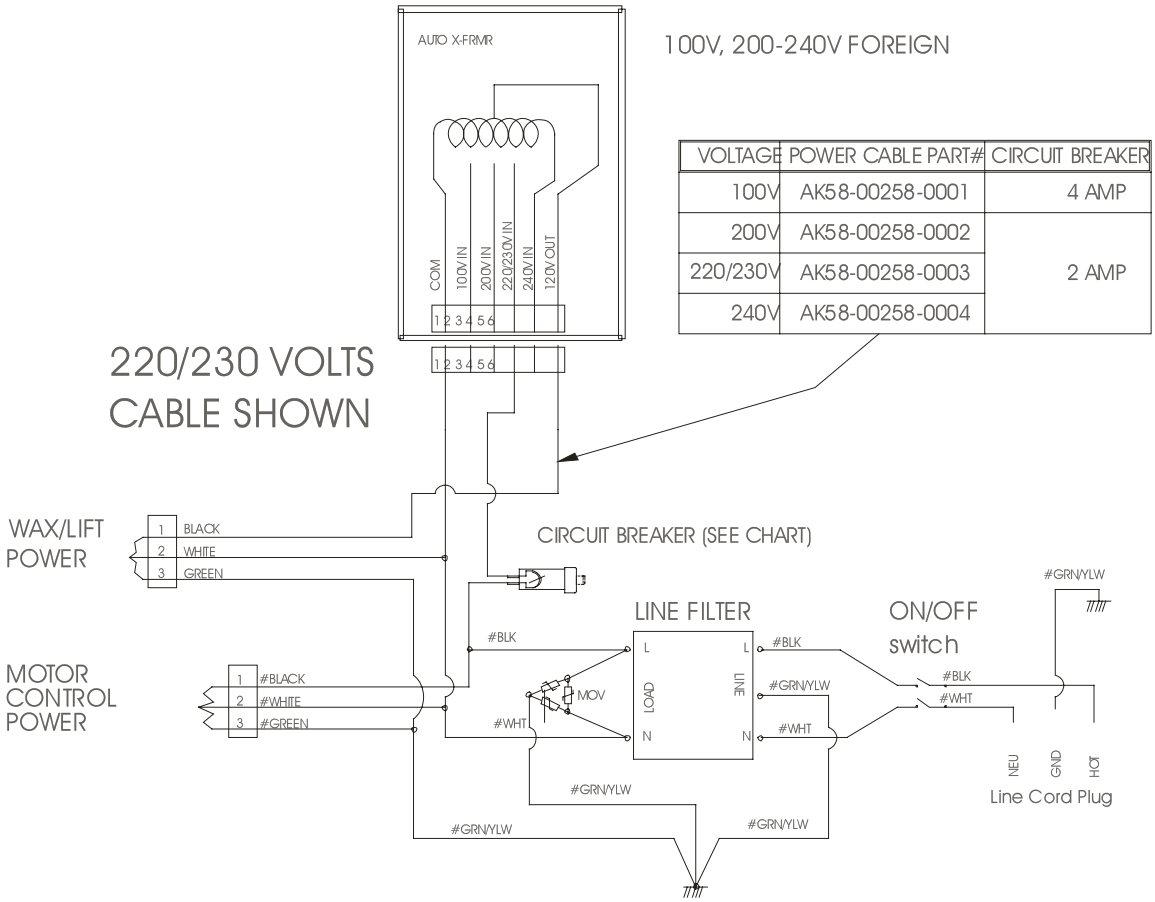


| VOLTAGE | POWER CABLE PART# | CIRCUIT BREAKER |
|---|---|---|
| 100V | AK58-00258-0001 | 4 AMP |
| 200V | AK58-00258-0002 | 2 AMP |
| 220/230V | AK58-00258-0003 | |
| 240V | AK58-00258-0004 | |

# SECTION V
# MISCELLANEOUS

**Page**

SERIAL AND MODEL NUMBERS ..... 3
PREVENTATIVE MAINTAINENCE TIPS ..... 4

**NOTES**

## Serial and Model Numbers

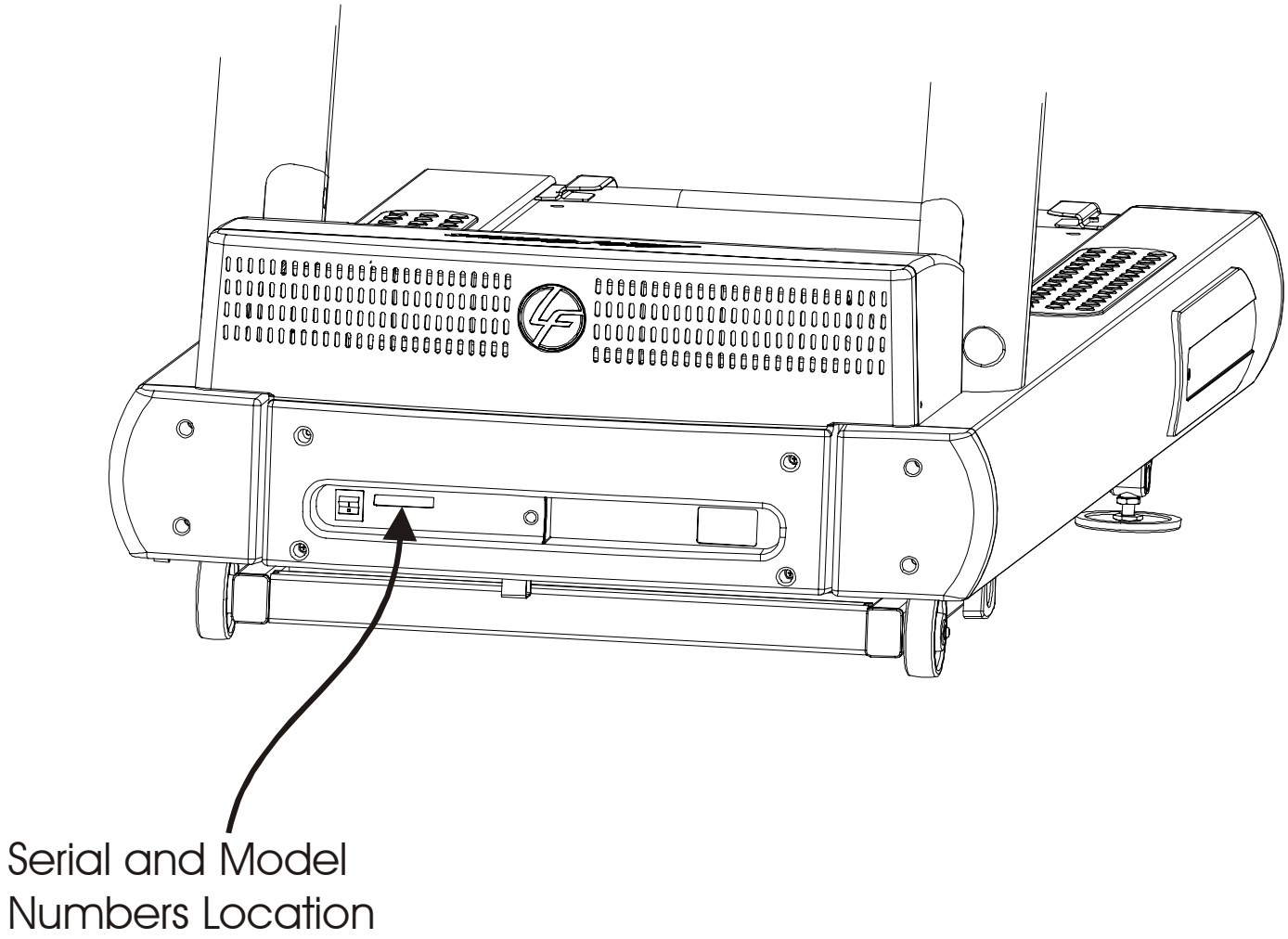

### *Preventive Maintenance Schedule*

| ITEM | WEEKLY | MONTHLY | QUARTERLY | BI-ANNUAL | ANNUAL |
|---|---|---|---|---|---|
| **DISPLAY CONSOLE ASSEMBLY** | | | | | |
| Hardware | | | | Inspect | |
| Overlay | Clean | | | Inspect | |
| Accessory Cups | | | | | Inspect |
| Stop Switch | Clean | | | Inspect | |
| Emergency Switch/Key | Clean | | | Inspect | |
| **HANDLEBAR ASSEMBLY** | | | | | |
| Hardware | | | | Inspect | |
| Handlebar | | | | Inspect | |
| Side Hand Rails | | | | Inspect | |
| Lifepulse Sensors | Clean/Inspect | | | | |
| Smart Stop Cover | Clean/Inspect | | | | |
| **FRAME ASSEMBLY** | | | | | |
| Hardware | | | | Inspect | |
| Motor Cover | Clean | | | | |
| Motor Electronic Compartment | | Vacuum Clean | | Inspect | |
| Drive Belt | | | | Inspect | |
| Leg Levelers | | Inspect/Adjust | | | |
| Front Roller | | | | Inspect | |
| Rear Roller | | | | Inspect | |
| **WAX SYSTEM** | | | | | |
| Wax Bag | | | Inspect | | |
| Wax System | | | | | Inspect |
| Wax Nozzle | Clean Every 2 weeks | | | | |

©2003 Brunswick Corporation. All rights reserved. Life Fitness is a registered trademark of Brunswick Corporation.
Zone Trainer and Heart Rate Zone Training are trademarks of Brunswick Corporation.
Any use of these trademarks, without the express written consent of Brunswick Corporation, is forbidden.

M051-00K58-B097
March 2004