Body-Solid

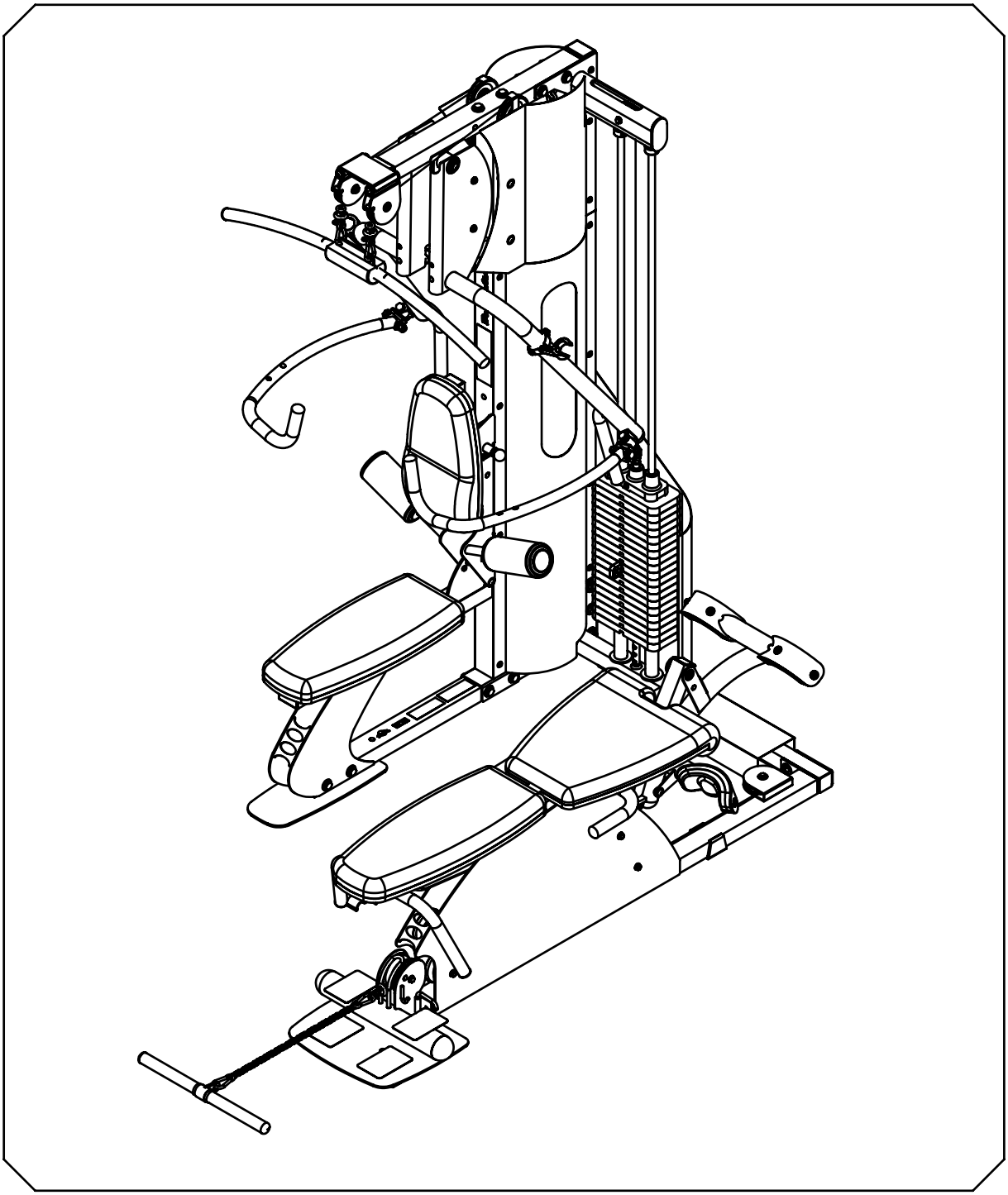

BODY-SOLID,Inc.
1900 S. Des Plaines Ave.
Forest Park, IL 60130 USA
Phone:(708)427-3555
Fax:(708)427-3556
www.bodysolid.com

# EXM-3550 OWNER'S MANUAL

## HARDWARE ILLUSTRATION

A1. 1/2"X4 1/4" HEX HEAD BOLT----------[10PCS]
A2. 1/2"X3" HEX HEAD BOLT----------[8PCS]
A3. 1/2"X2 3/4" HEX HEAD BOLT----------[2PCS]
A4. 3/8"X4 1/4"HEX HEAD BOLT----------[2PCS]
A5. 3/8"X4" HEX HEAD BOLT----------[4PCS]
A6. 3/8"X3 3/4" HEX HEAD BOLT----------[1PCS]
A7. 3/8"X1 3/4" HEX HEAD BOLT----------[9PCS]
A8. 5/16"X2" HEX HEAD BOLT----------[2PCS]
A9. 5/16"X1" HEX HEAD BOLT----------[14PCS]
A10. 3/8"X2" ROUND BOLT ----------[1PCS]
A11. 5/16"X3/4" ROUND BOLT----------[8PCS]
A12. M10x80L ROUND BOLT----------[2PCS]
A13. M10x65L ROUND BOLT----------[4PCS]
A14. M10x40L ROUND BOLT----------[2PCS]
A15. 10LB PIN(8250-047)----------[1PCS]
A16. STEEL CHAIN ----------[1PCS]
A17. 1/2"X3 1/2" HEX HEAD BOLT----------[2PCS]
A18. 5/16"X1 3/4" HEX HEAD BOLT----------[1PCS]
A19. 3/8"X3" HEX HEAD BOLT----------[2PCS]

B1. 1/2" Nylon Lock Nut----------[19PCS]
B2. 3/8" Nylon Lock Nut----------[13PCS]
B3. M10 Nylon Lock Nut----------[8PCS]
B4. 5/16" Nylon Lock Nut----------[1PCS]

C1. 1/2"XØ34 (I.D)WASHER----------[33PCS]
C2. 1/2"XØ25 (I.D)WASHER----------[8PCS]
C3. 3/8" WASHER----------[31PCS]
C4. 5/16" WASHER----------[26PCS]
C5. M10 WASHER----------[8PCS]
C6. 5/16" SPRING WASHER----------[24PCS]

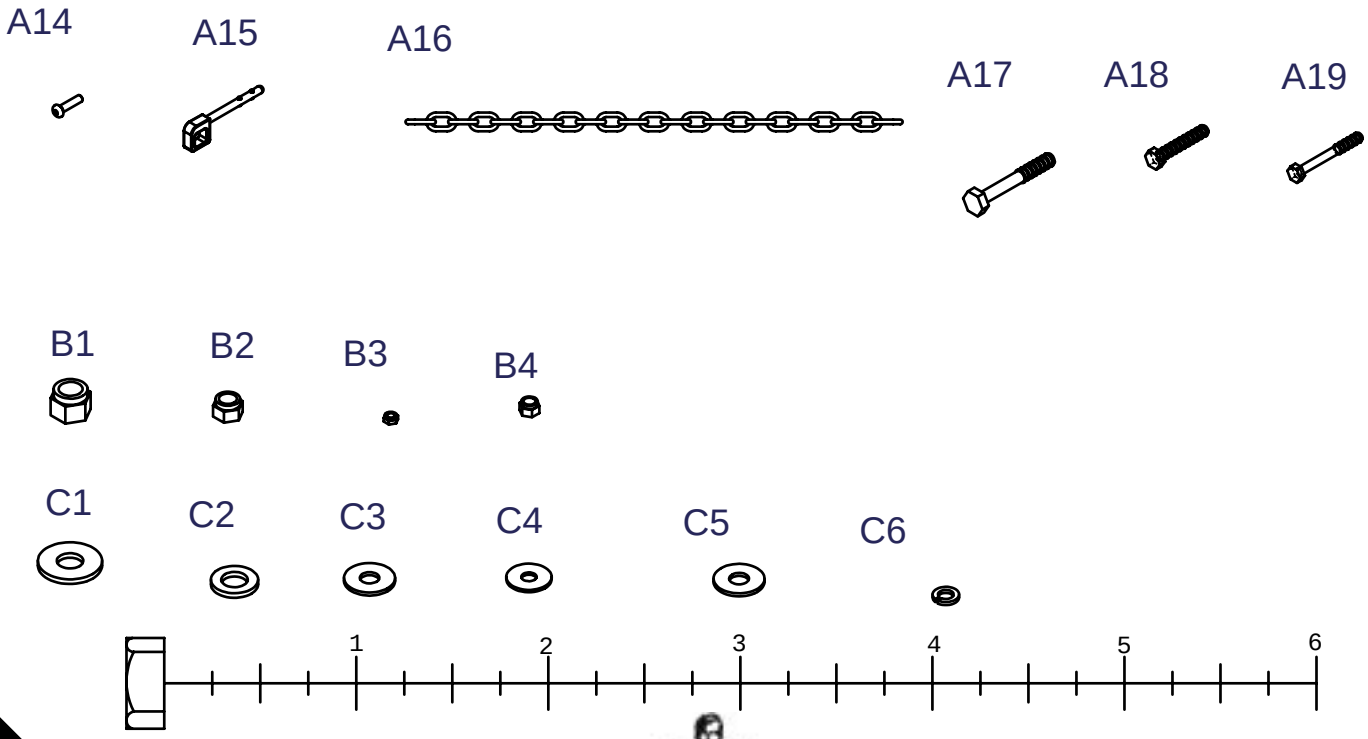

## HARDWARE ILLUSTRATION

D1

D3

D4

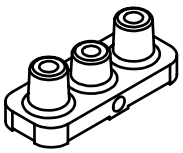

D5

D6

D7

D8

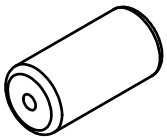

D9

D. Ø3/4"X8L STEEL BUSHING (8110-014) ----------[2PCS]
D2. WEIGHT SELECTOR BAR (8210-070A)----------[1PCS]
D3. PULLEY WHEEL BLOCK (8331-017)----------[2PCS]
D4. TOP PLATE (8400-005)----------[1PCS]
D5. Ø16X14.8 STEEL BUSHING (8530-003)----------[2PCS]
D6. Ø16X21.5 STEEL BUSHING (8530-010)----------[16PCS]
D7. Ø8 SPRING SNAP LINK (8810-001)----------[6PCS]
D8. Ø4"X8" FOAM ROLLER (9161-032)----------[2PCS]
D9. 2"X2"X1.8t END CAP (9211-005)----------[1PCS]
D10. 2"X2"X2.5t END CAP (9211-006)----------[4PCS]
D11. 2"X3" END CAP (9211-012)----------[2PCS]
D12. Ø1" ROUND END CAP (9211-022)----------[2PCS]
D13. Ø1 1/2" ROUND END CAP (9211-023)----------[6PCS]
D14. 2"X3" FOOT CAP (9211-026)----------[1PCS]
D15. Ø3/4" SHAFT COLLAR (9211-046)----------[2PCS]
D16. Ø21.5 ROUND END CAP (9211-060)----------[1PCS]
D17. Ø1"X2.5t ROUND END CAP (9211-062)----------[2PCS]
D18. Ø2" ROUND END CAP (9211-074)----------[2PCS]
D19. Ø60 ROUND END CAP (9211-075)----------[2PCS]
D20. Ø3" ROUND END CAP (9211-076)----------[2PCS]
D21. 30X60 END CAP (9211-078)----------[4PCS]
D22. 2"X3" RUBBER DOUNT (9212-011)----------[1PCS]
D23. Ø4 1/4" PULLEY (9213-002C)----------[20PCS]
D24. Ø4 1/4" PULLEY (9213-002D)----------[1PCS]
D25. Ø3" PULLEY (9213-011)----------[1PCS]

D10

D11

D12

D13

D14

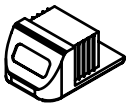

D15

D16

D17

D18

D19

D20

D21

D22

D23

D24

D25

D2

## HARDWARE ILLUSTRATION

D26. Ø110X50 PULLEY (9213-022A)----------[1PCS]
D27. Ø110X50 PULLEY (9213-022C)----------[3PCS]
D28. 2"X2" RUBBER CANE CAP (9214-002)----------[2PCS]
D29. Ø51XØ38 FASTENING HOLDER (9219-003)----------[1PCS]
D30. Ø51XØ38 FASTENING HOLDER (9219-004)----------[1PCS]
D31. Ø1" ROUND END CAP (9260-021)----------[4PCS]
D32.Ø55 RUBBER DOUNT (9310-027)----------[2PCS]
D33. 95X140mm NO-SLIP TAPE (9310-035) ----------[4PCS]
D34. 6180mm STEEL CABLE----------[1PCS]
D35. 5780mm STEEL CABLE----------[1PCS]
D36. 1800mm STEEL CABLE----------[1PCS]
D37. 1135mm STEEL CABLE----------[1PCS]
D38. 600mm STEEL CABLE----------[1PCS]

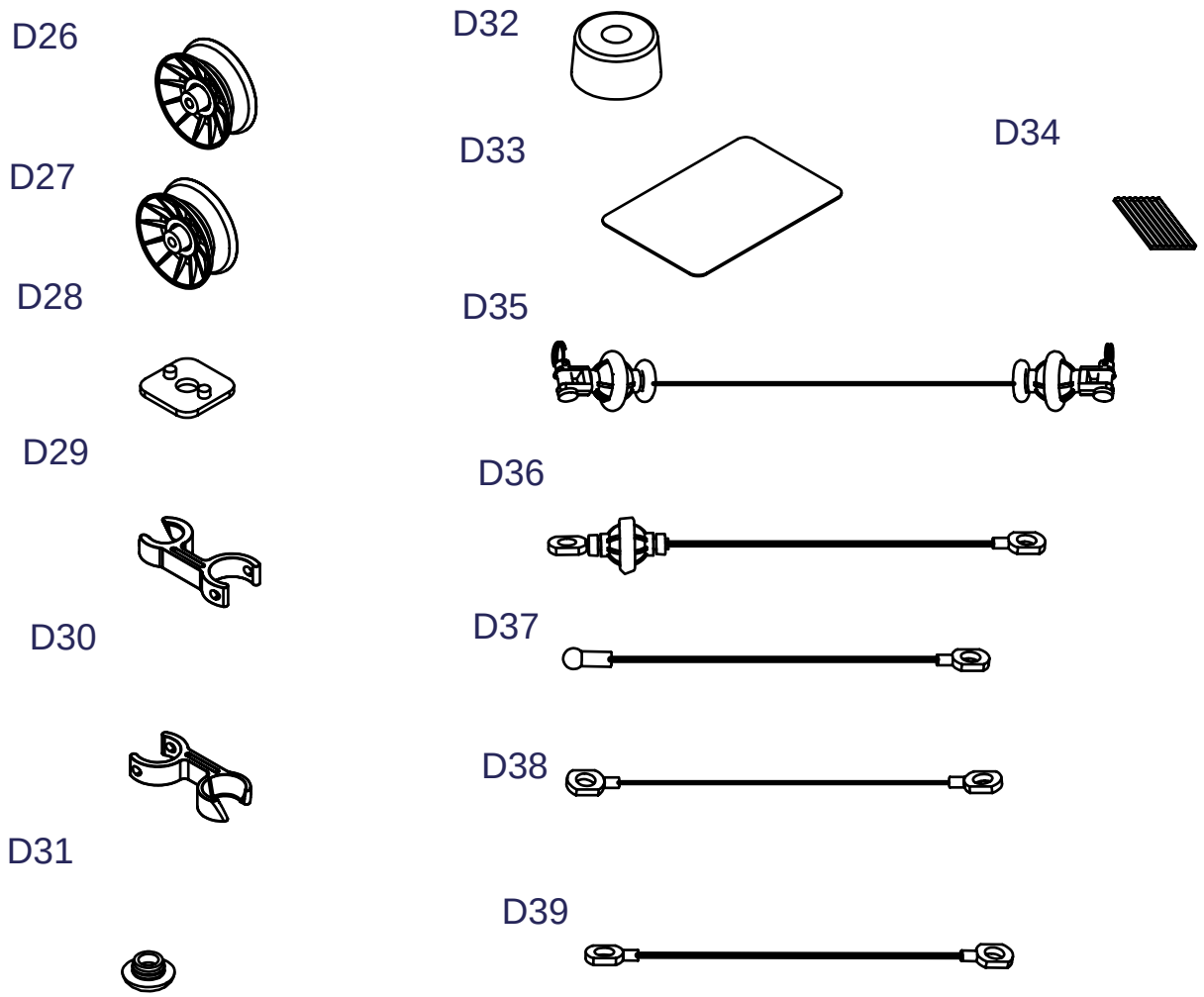

# PARTS ILLUSTRATION SHEET

A [1PCS]

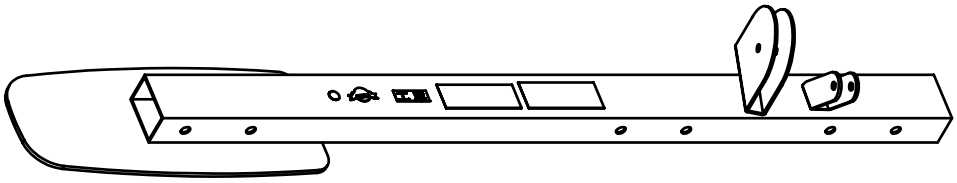

B [1PCS]

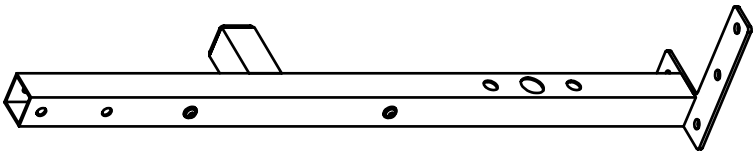

C [1PCS]

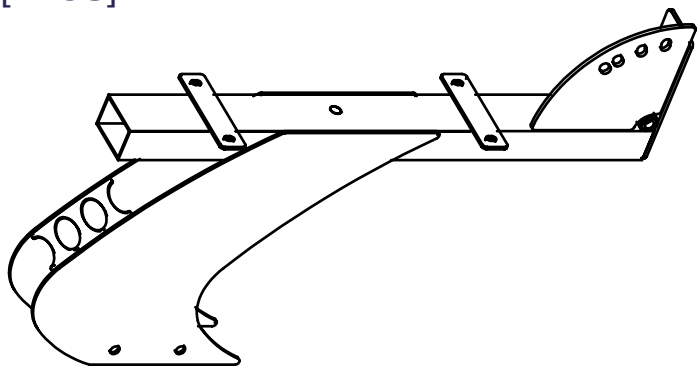

D [1PCS]

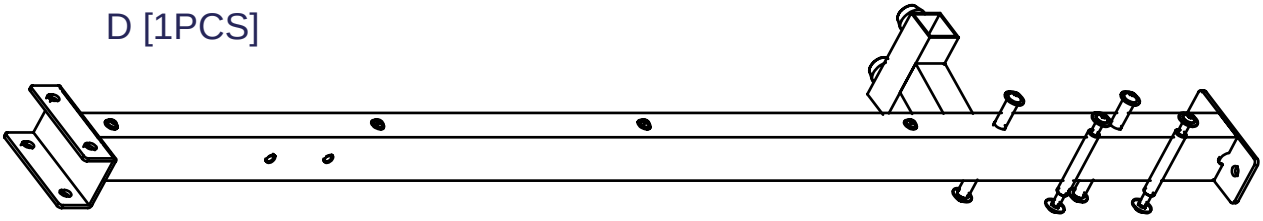

E [1PCS]

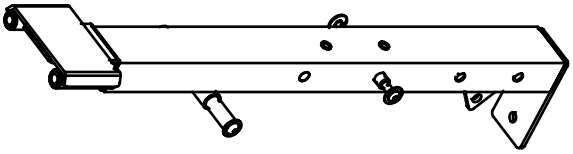

F [1PCS]

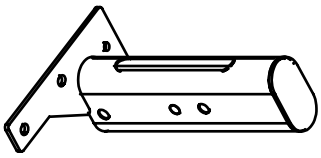

# PARTS ILLUSTRATION SHEET

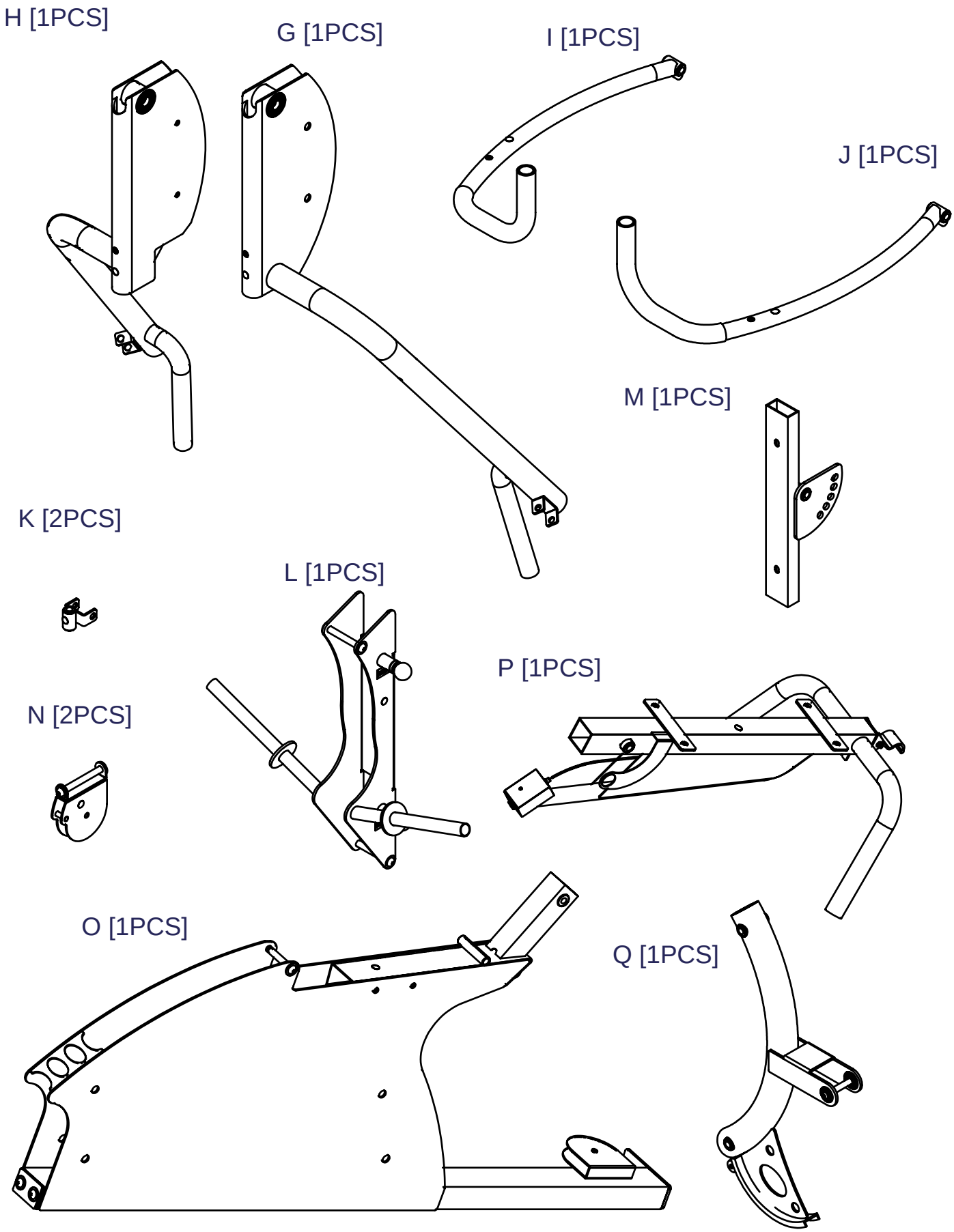

# PARTS ILLUSTRATION SHEET

R [1PCS]

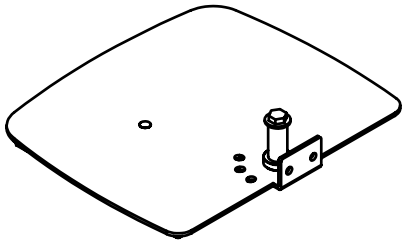

S [2PCS]

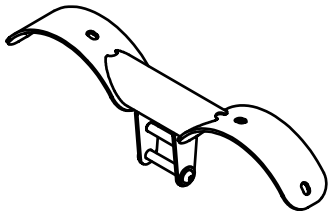

T [1PCS]

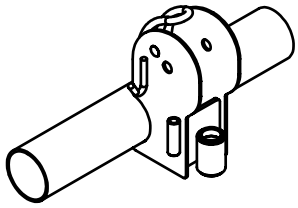

U [1PCS]

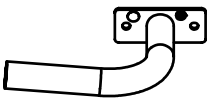

V [1PCS]

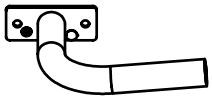

W [2PCS]

Y [2PCS]

Z [1PCS]

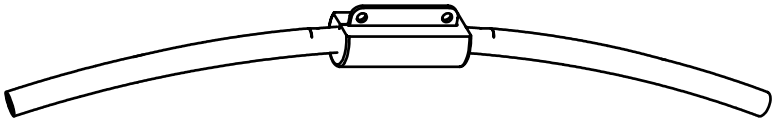

AA [1PCS]

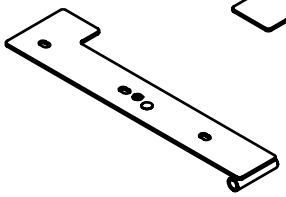

X [1PCS]

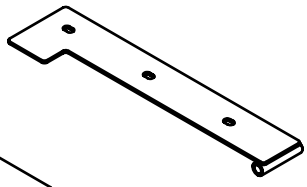

AB [1PCS]

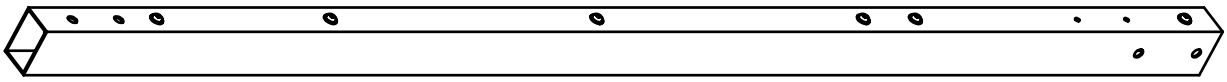

AC [2PCS]

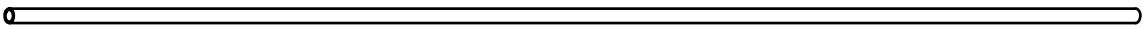

AD [1PCS]

AE [4PCS]

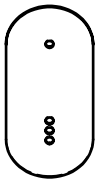

AF [1PCS]

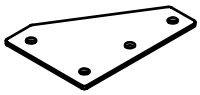

AG [1PCS]



AH [1PCS]

AI [1PCS]

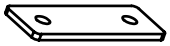

# PARTS ILLUSTRATION SHEET

AI [1PCS]

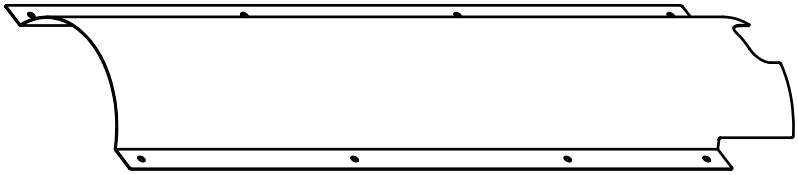

AJ [1PCS]

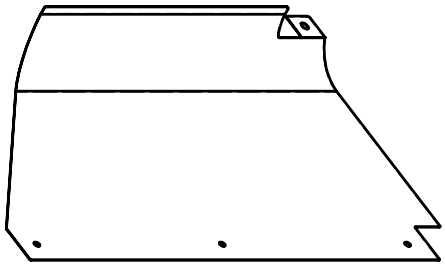

AK [1PCS]

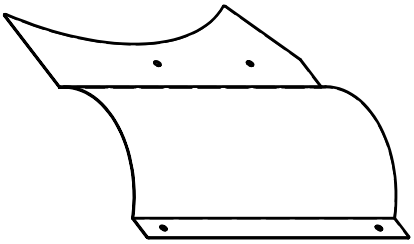

AL [1PCS]

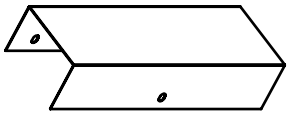

AM [1PCS]

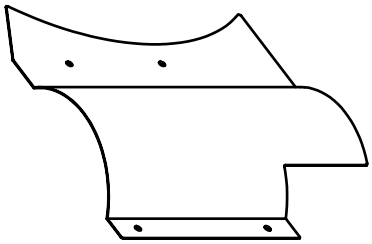

AN[1PCS]

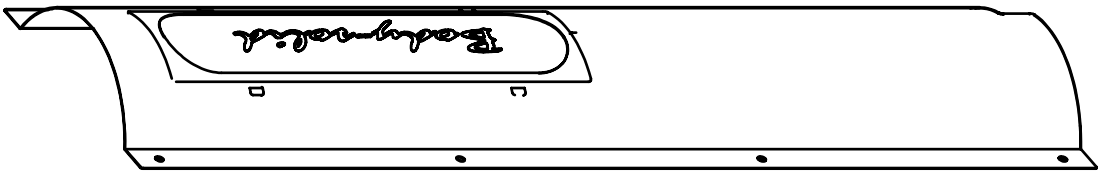

AP[4PCS]

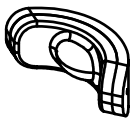

AQ[1PCS]

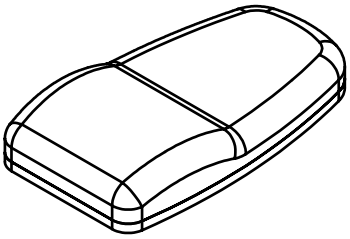

AR[1PCS]

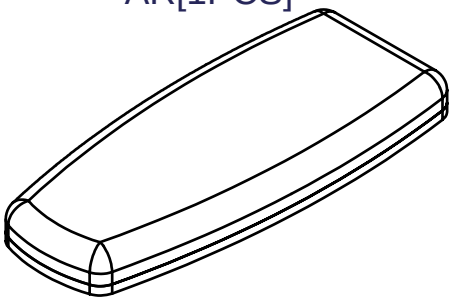

AS[1PCS]

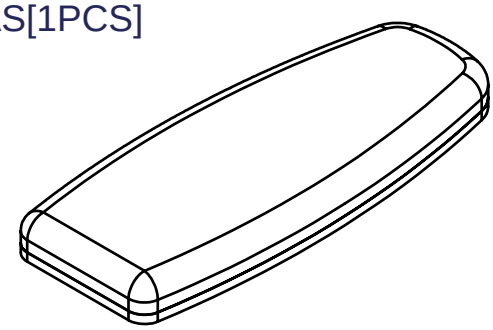

AT[1PCS]

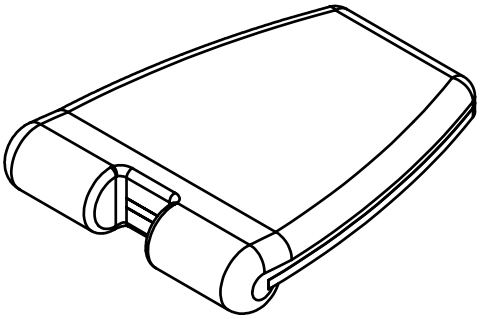

# ASSEMBLY STEP 1

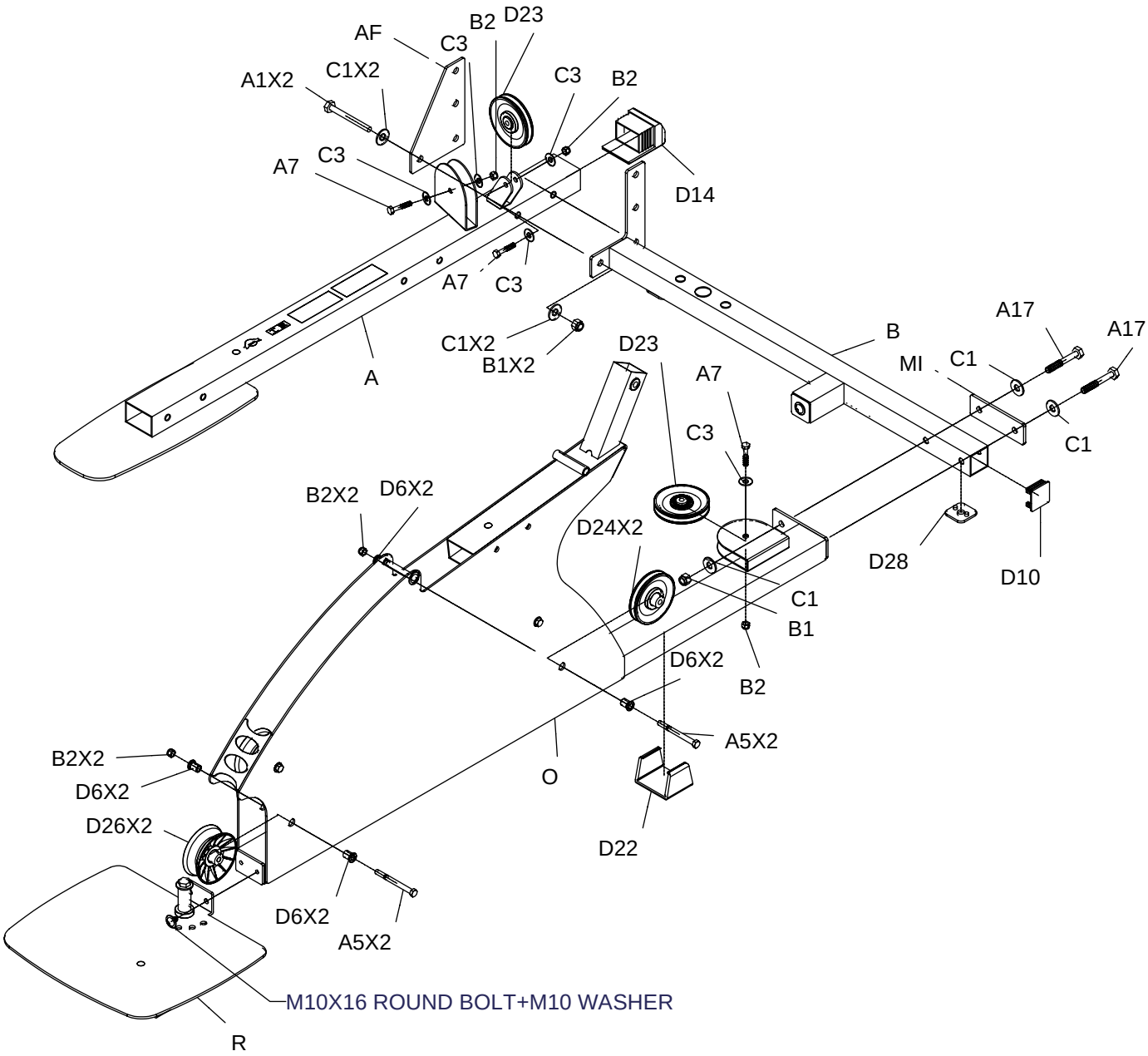

# ASSEMBLY STEP 2

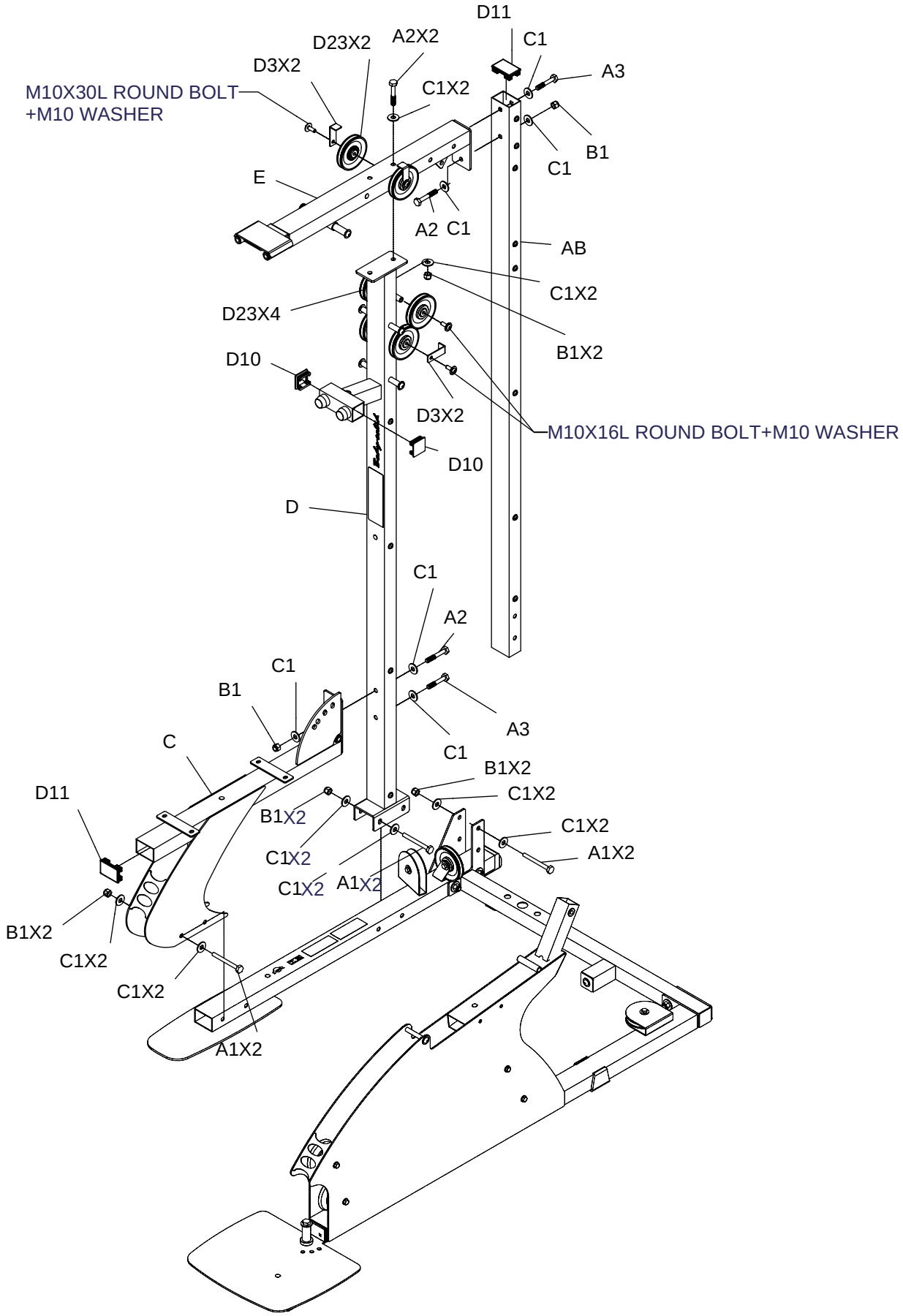

# ASSEMBLY STEP 3

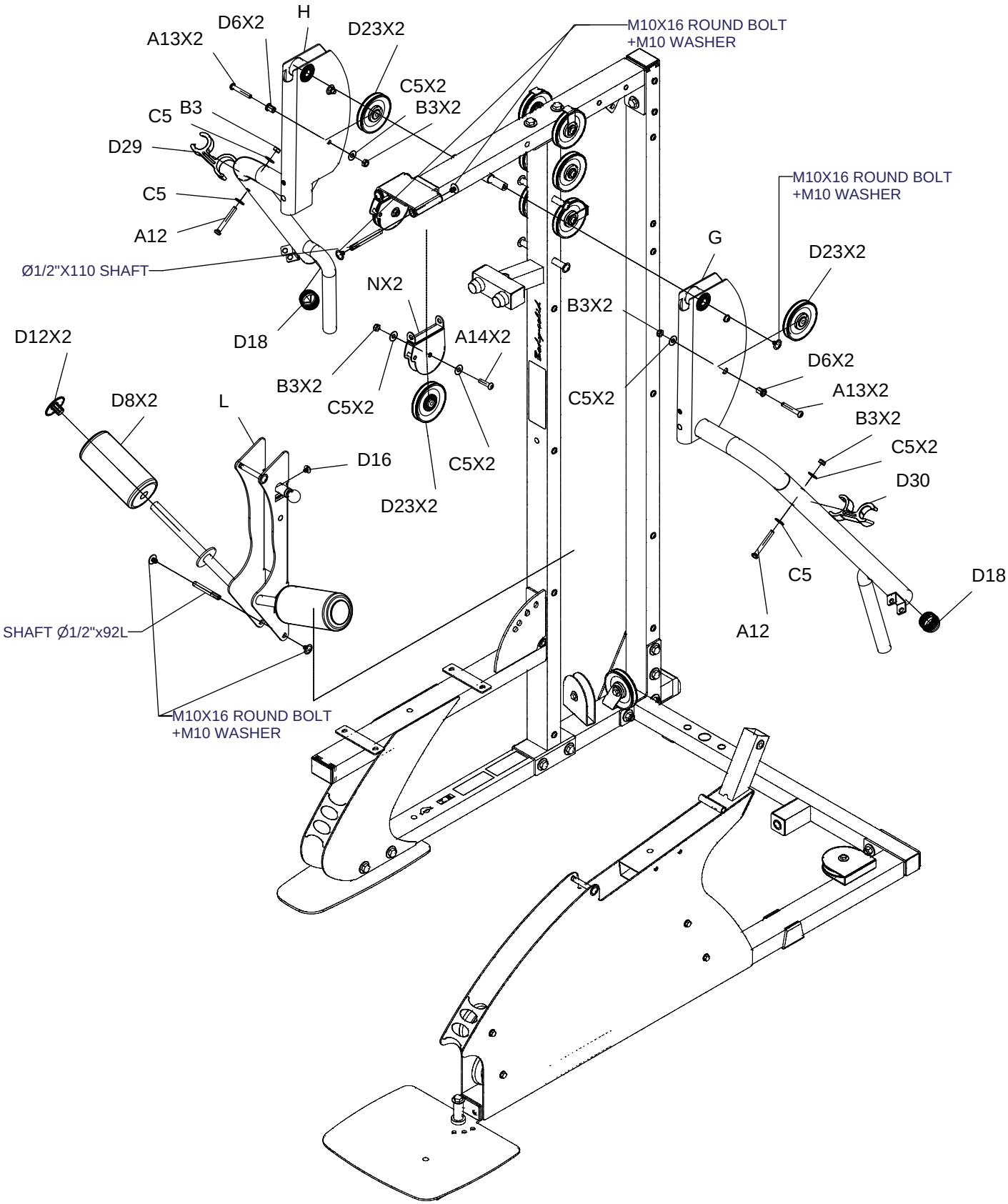

# ASSEMBLY STEP 4

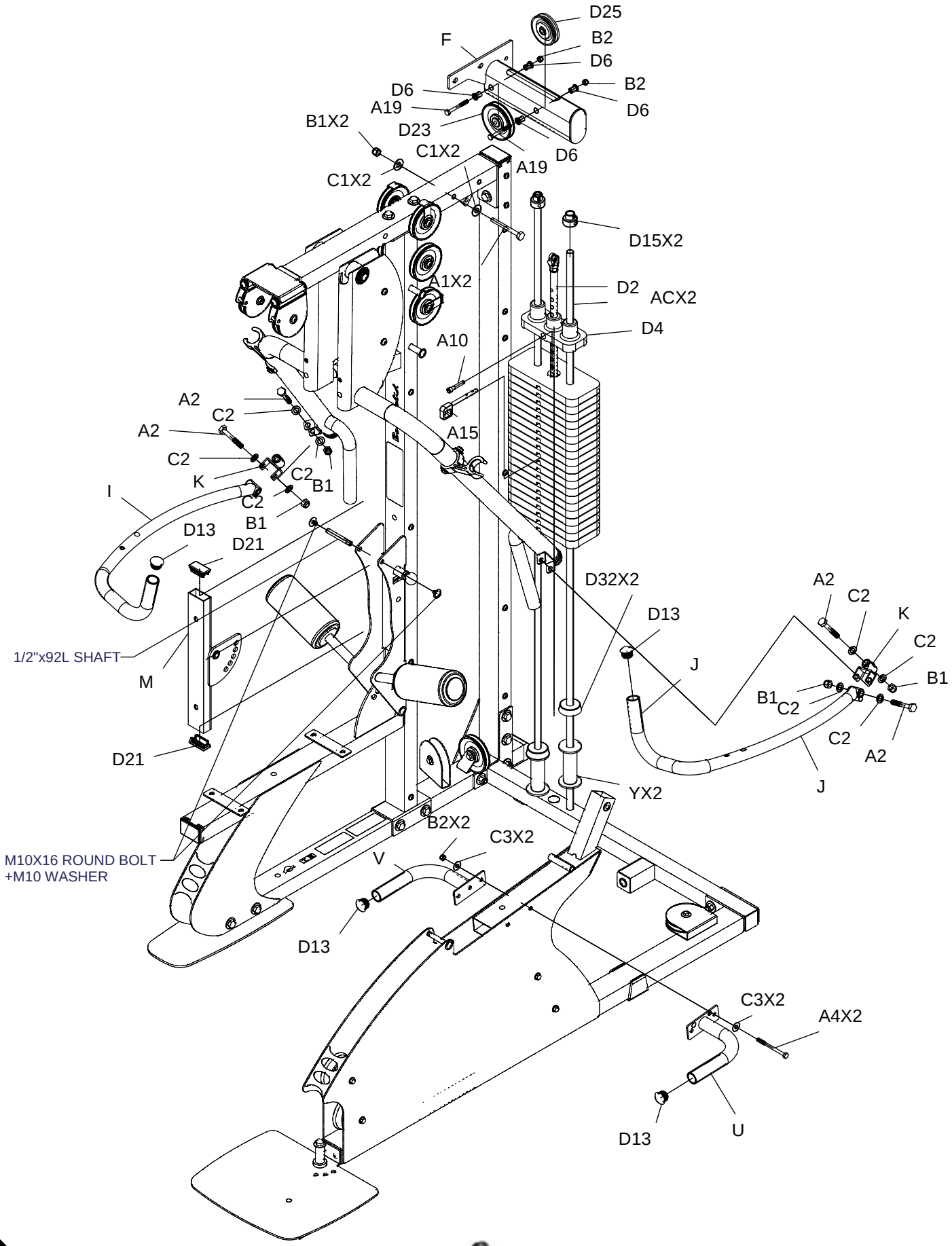

# ASSEMBLY STEP 5

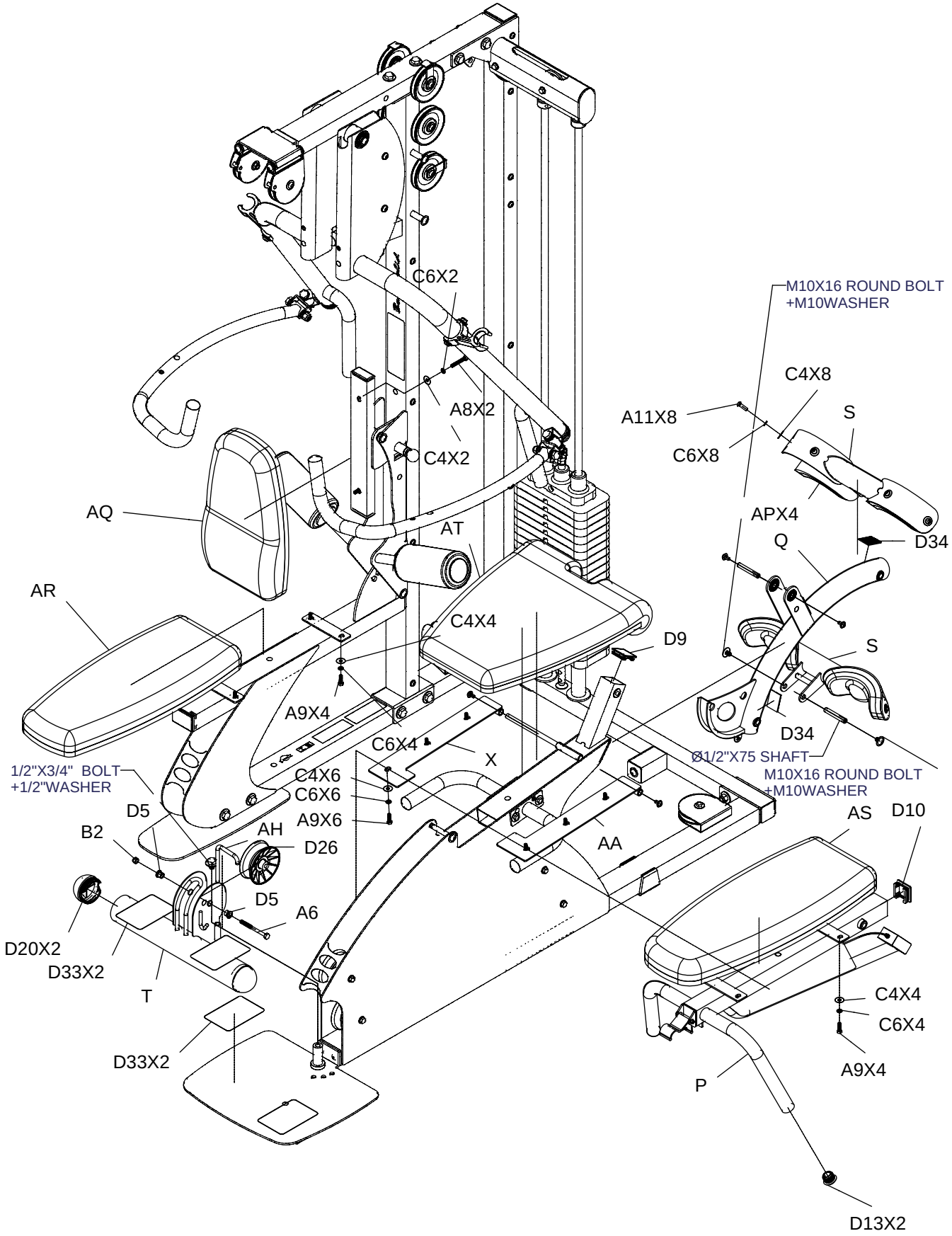

# Wire Rope illustration 1

D37

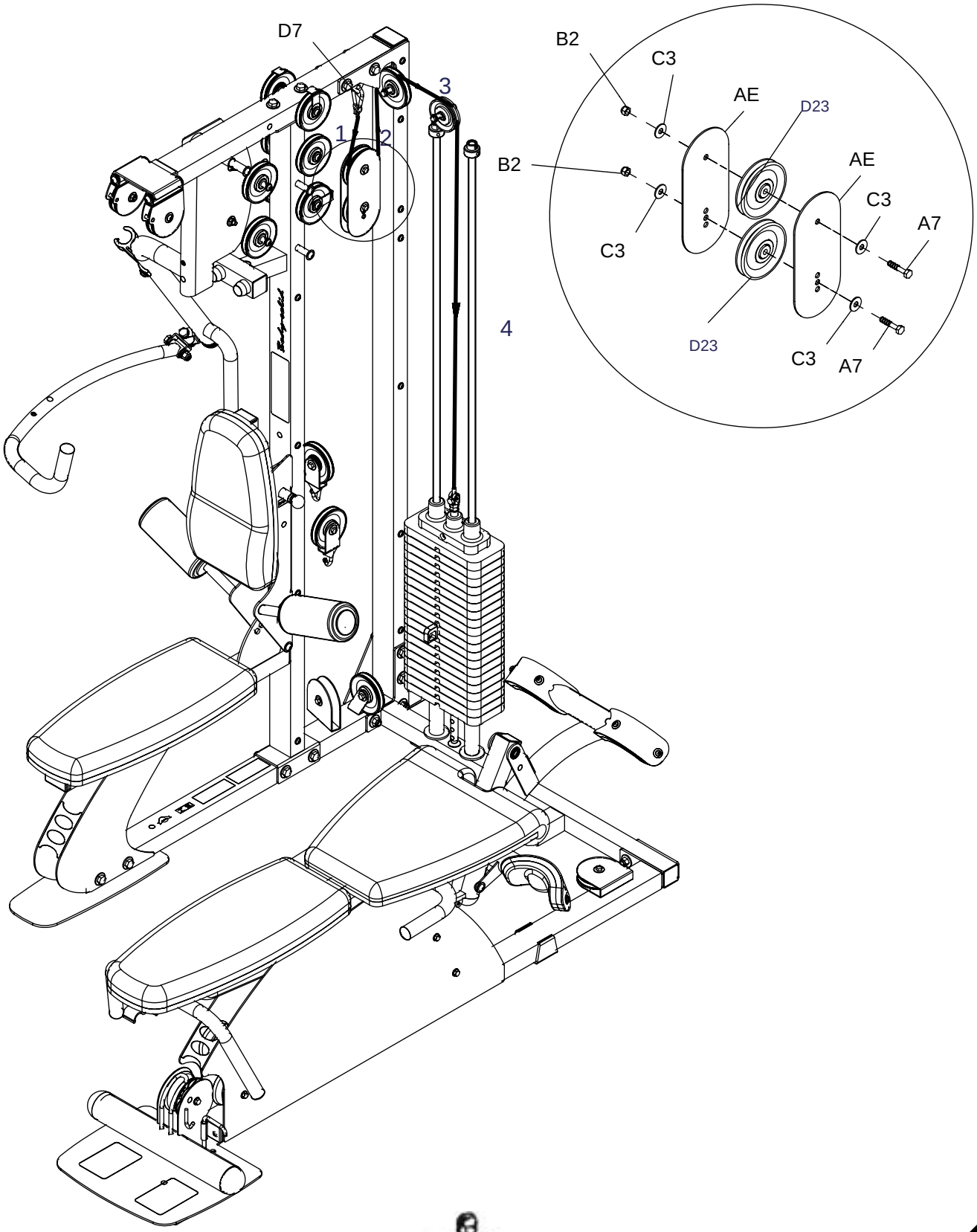

## Wire Rope illustration 2

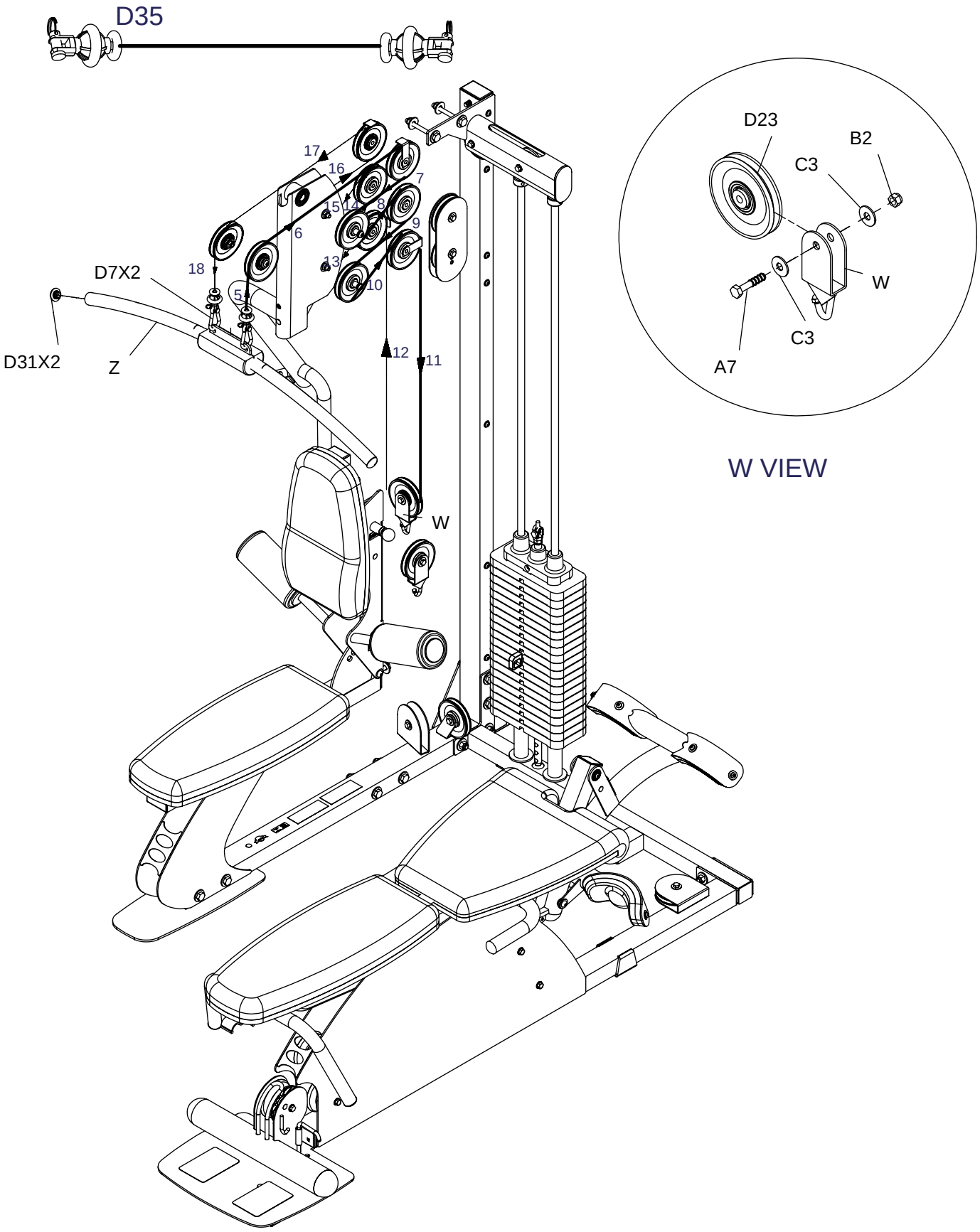

# Wire Rope illustration 3

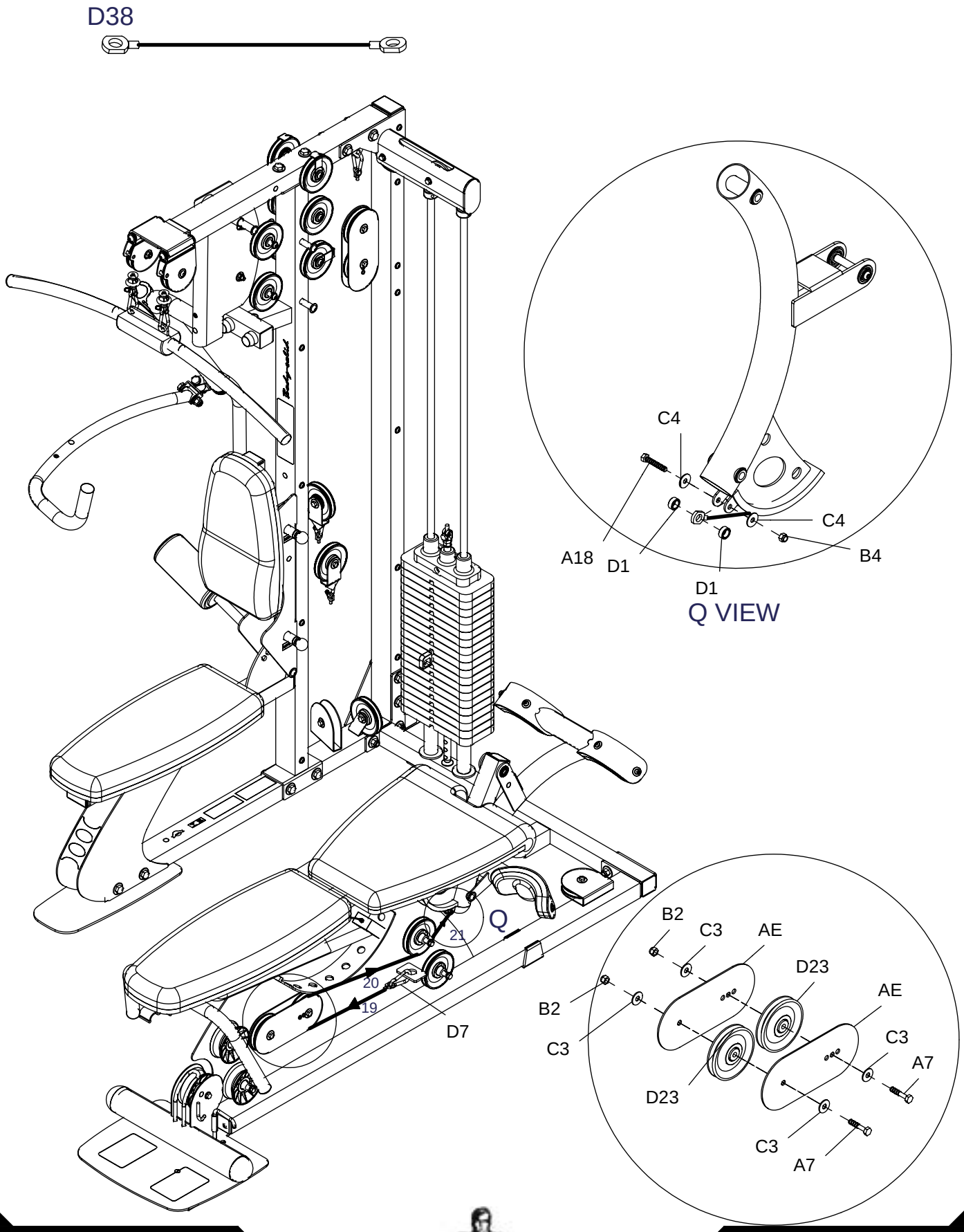

# Wire Rope illustration 4

D36

W VIEW

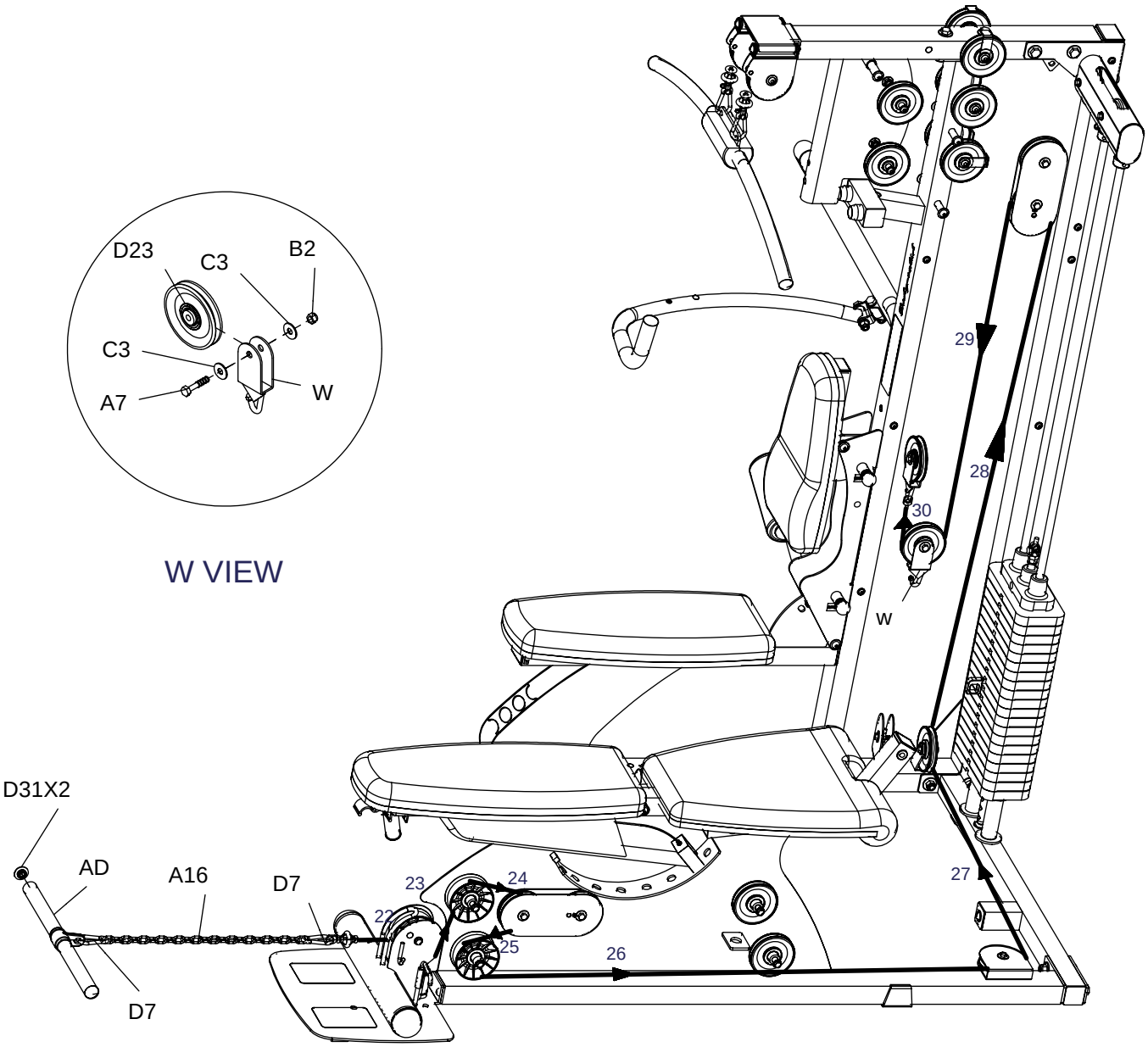

# Wire Rope illustration 5

D39

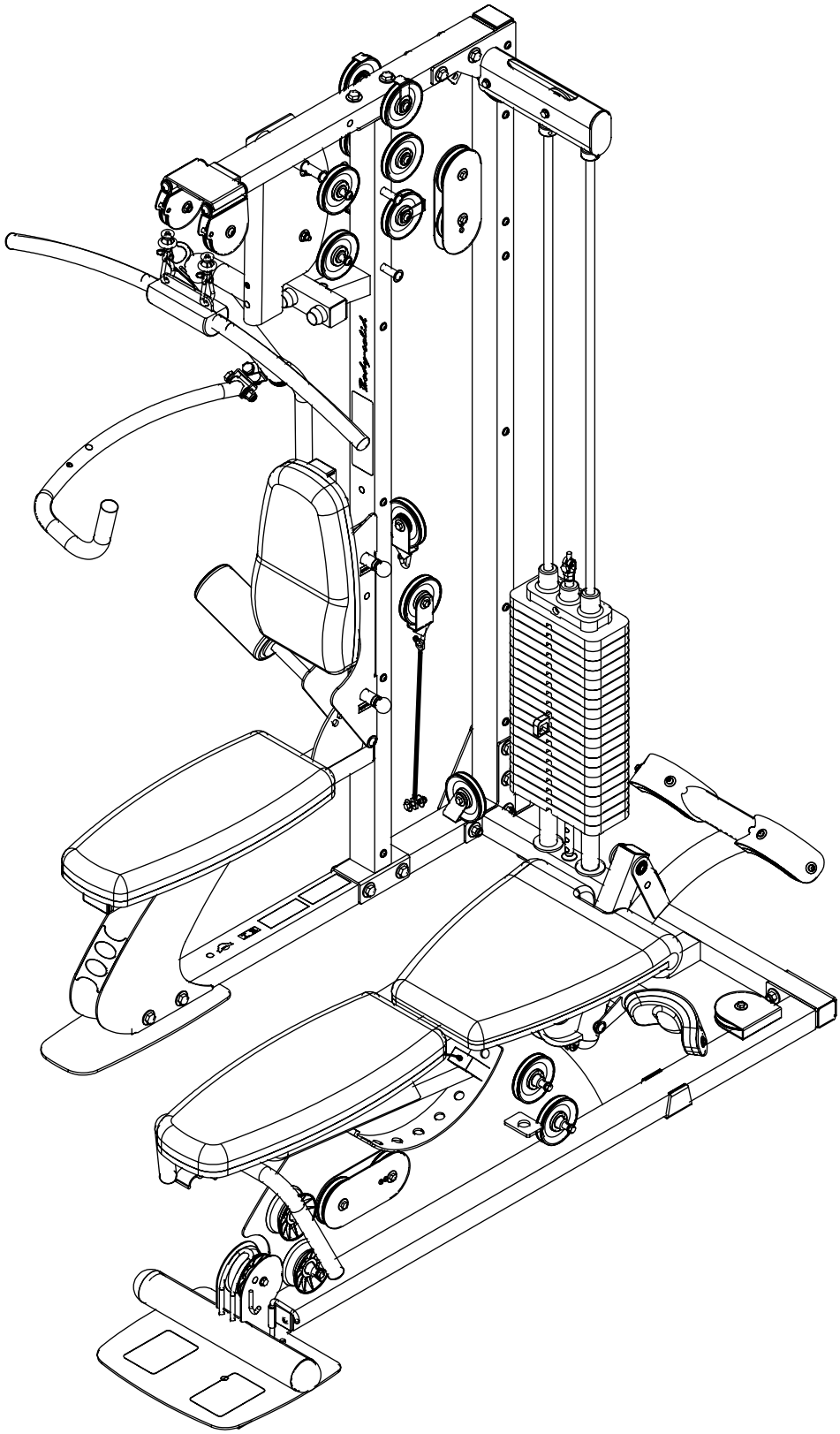
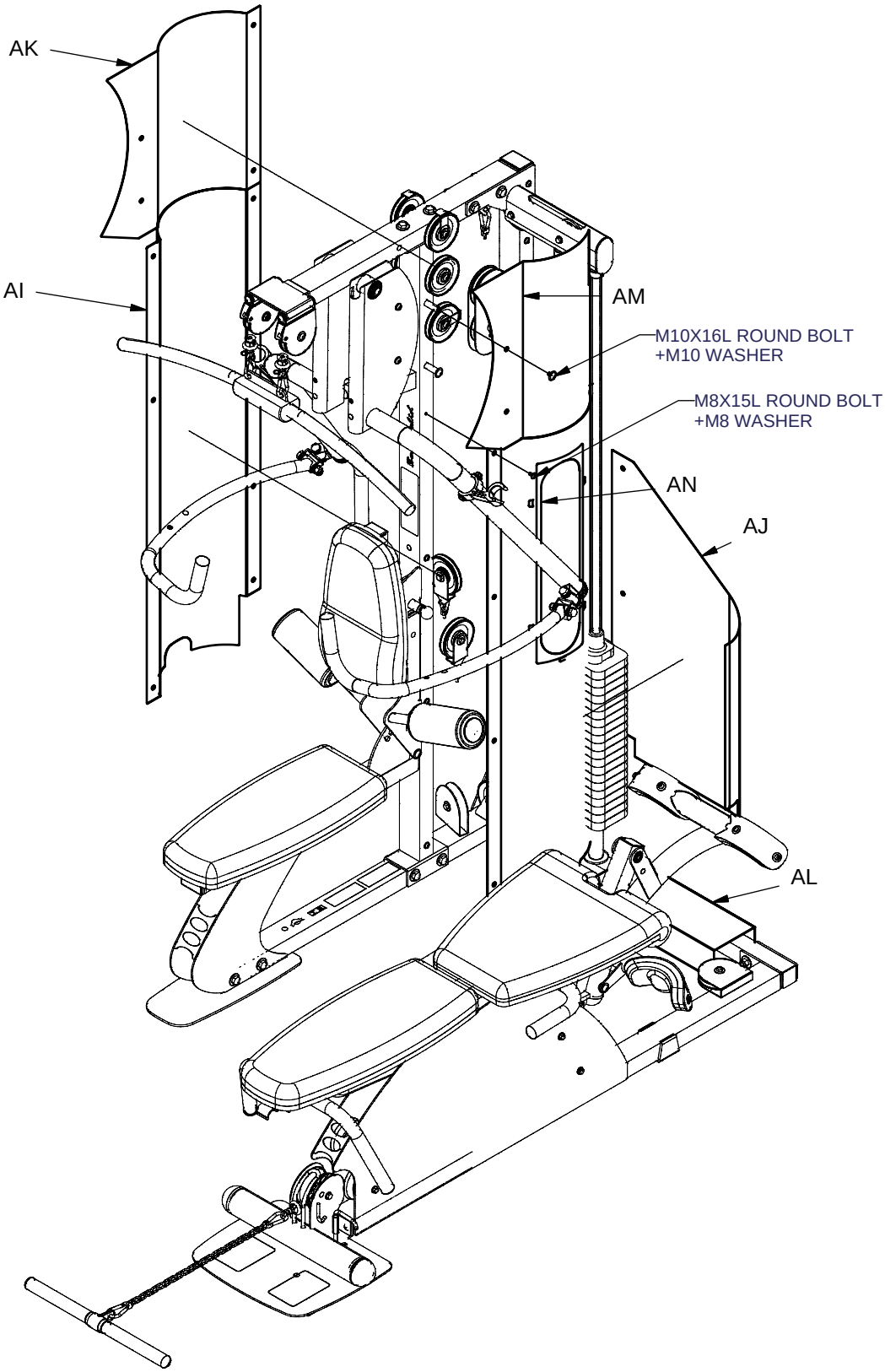
# ASSEMBLY STEP 6