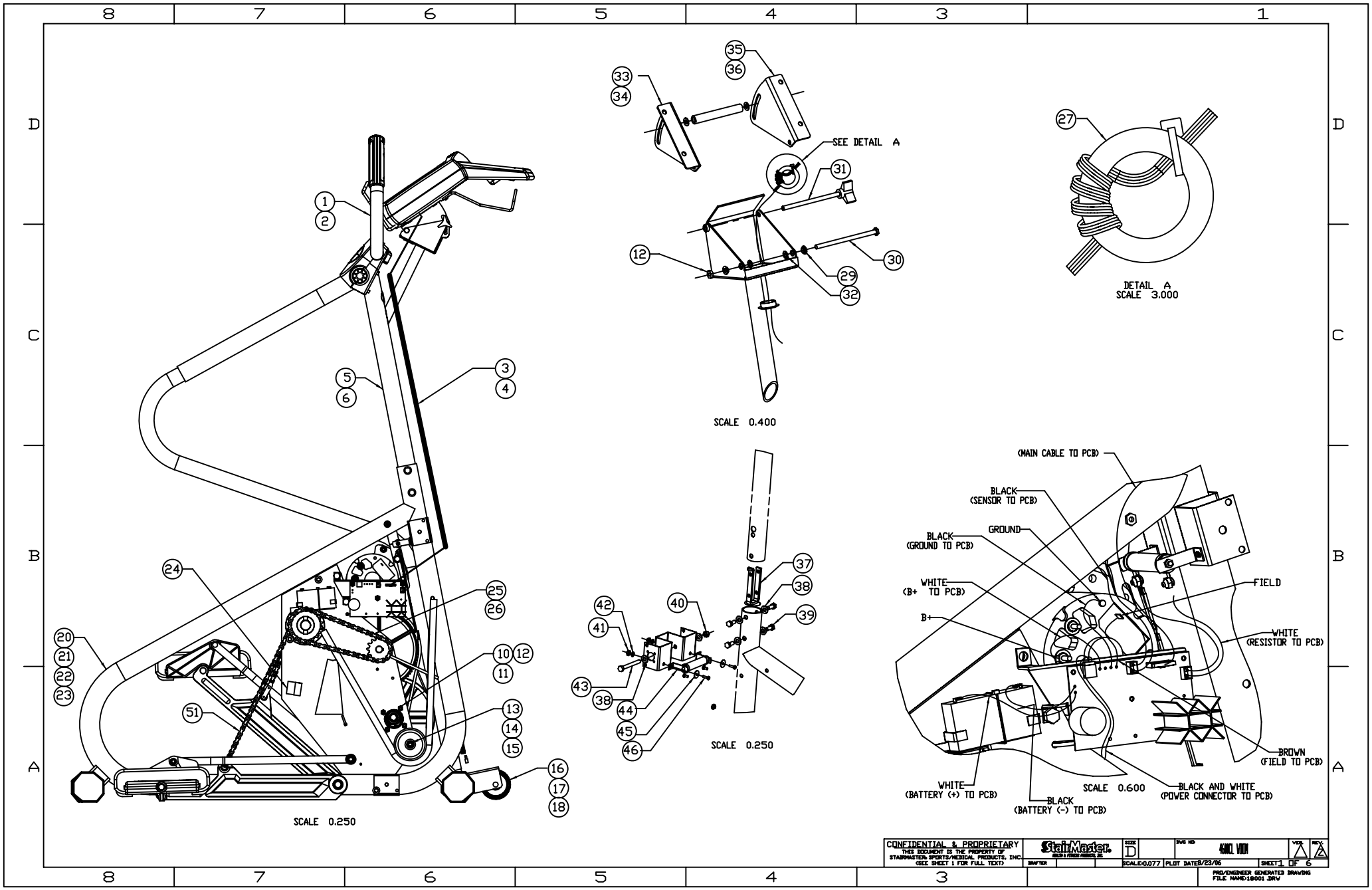

SEE DETAIL A
SCALE 0.400
DETAIL A
SCALE 3.000
SCALE 0.250
SCALE 0.250
(MAIN CABLE TO PCB)
BLACK
(SENSOR TO PCB)
GROUND
BLACK
(GROUND TO PCB)
WHITE
(B+ TO PCB)
B+
FIELD
WHITE
(RESISTOR TO PCB)
BROWN
(FIELD TO PCB)
WHITE
(BATTERY (+) TO PCB)
BLACK
(BATTERY (-) TO PCB)
SCALE 0.600
BLACK AND WHITE
(POWER CONNECTOR TO PCB)
CONFIDENTIAL & PROPRIETARY
THIS DOCUMENT IS THE PROPERTY OF
STAIRMASTER SPORTS/MEDICAL PRODUCTS, INC.
(SEE SHEET 1 FOR FULL TEXT)
StairMaster
SIZE
D
DWG NO
SCALE 0.077
PLOT DATE 8/23/06
SHEET 1 OF 6
PRO/ENGINEER GENERATED DRAWING
FILE NAME 18001.DRW

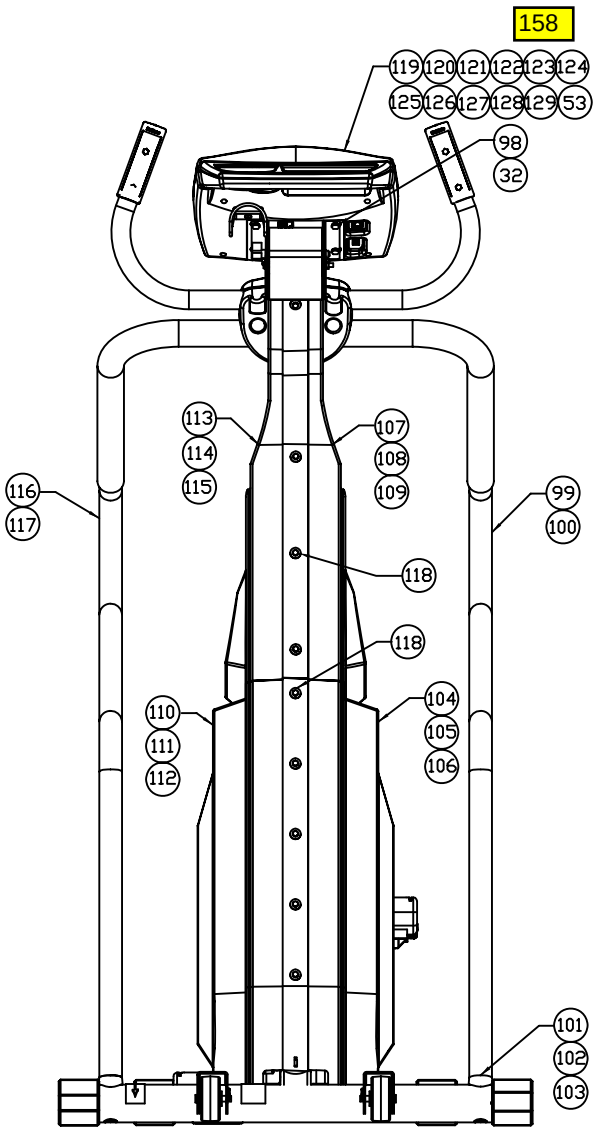

SCALE 0.250

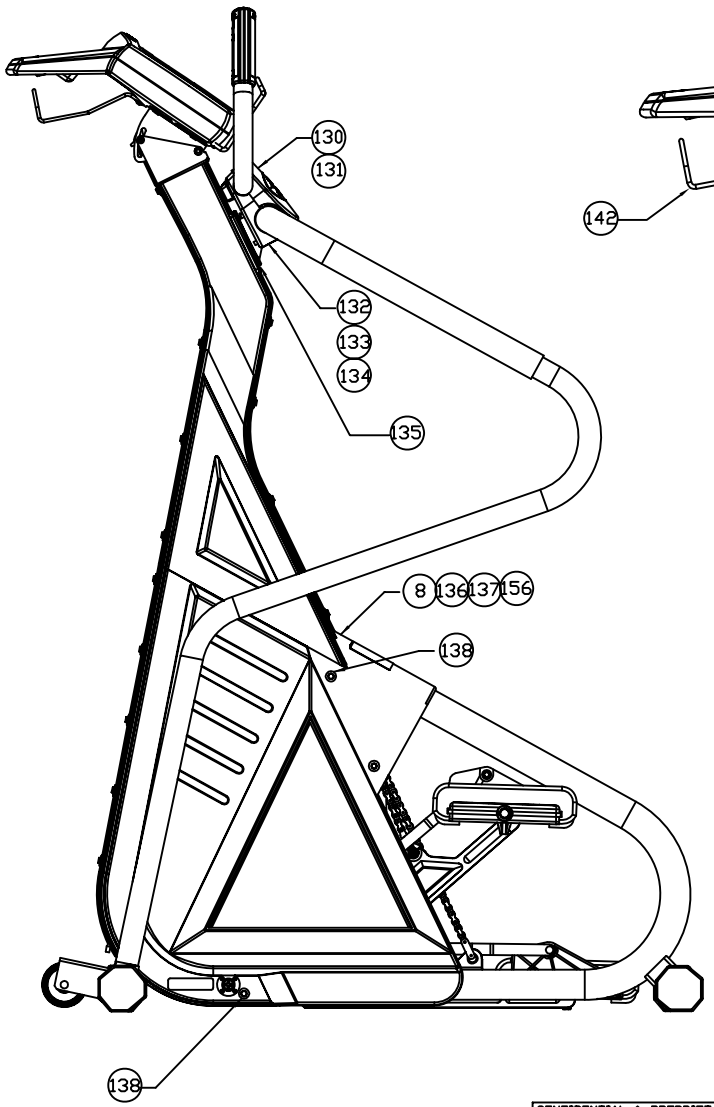

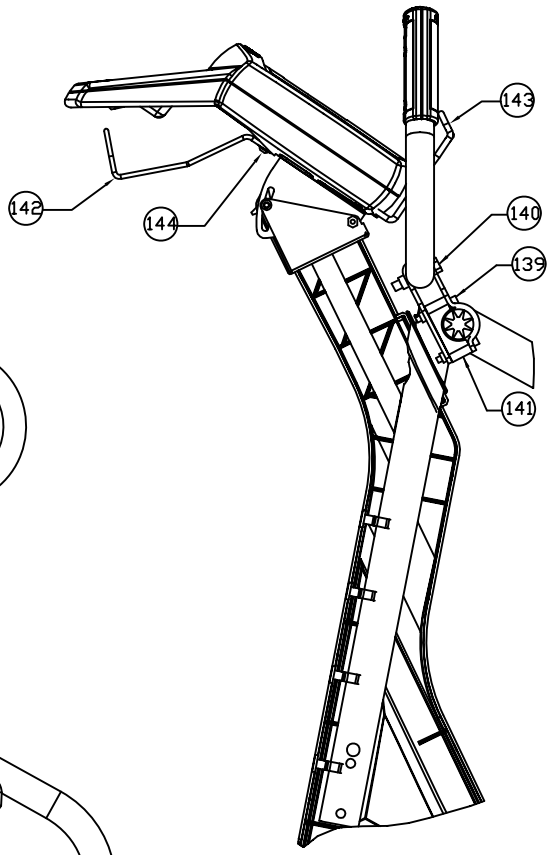

SCALE 0.375

CONFIDENTIAL & PROPRIETARY THIS DOCUMENT IS THE PROPERTY OF STAIRMASTER SPORTS/MEDICAL PRODUCTS, INC. (SEE SHEET 1 FOR FULL TEXT)	StairMaster	SIZE D	DWG NO 4600CL VISION
		DRAFTER	SCALE:0.077 PLOT DATE:8/23/06 SHEET 5 OF 6
			PRO/ENGINEER GENERATED DRAWING FILE NAME:18001.DRW

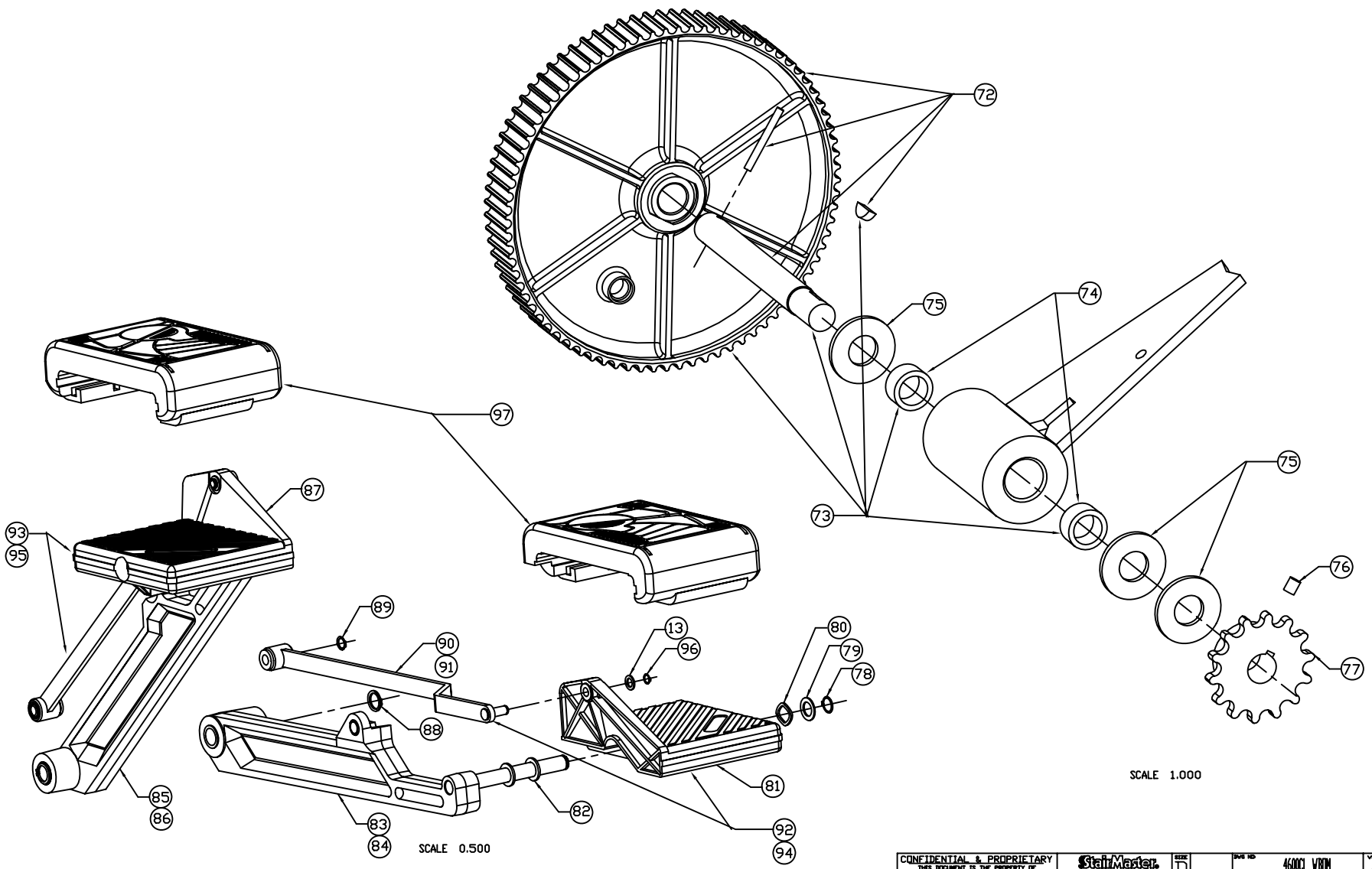

CONFIDENTIAL & PROPRIETARY
THIS DOCUMENT IS THE PROPERTY OF STAIRMASTER® SPORTS/MEDICAL PRODUCTS, INC. (SEE SHEET 1 FOR FULL TEXT)

StairMaster® KOREAN & FINNISH PRODUCTS, INC.

DRAFTER

SIZE D | DWG NO 4600CL WBDM | VER. | REV.

SCALE 0.077 | PLOT DATE 8/23/06 | SHEET 4 OF 6

PRO/ENGINEER GENERATED DRAWING
FILE NAME 18001.DRW

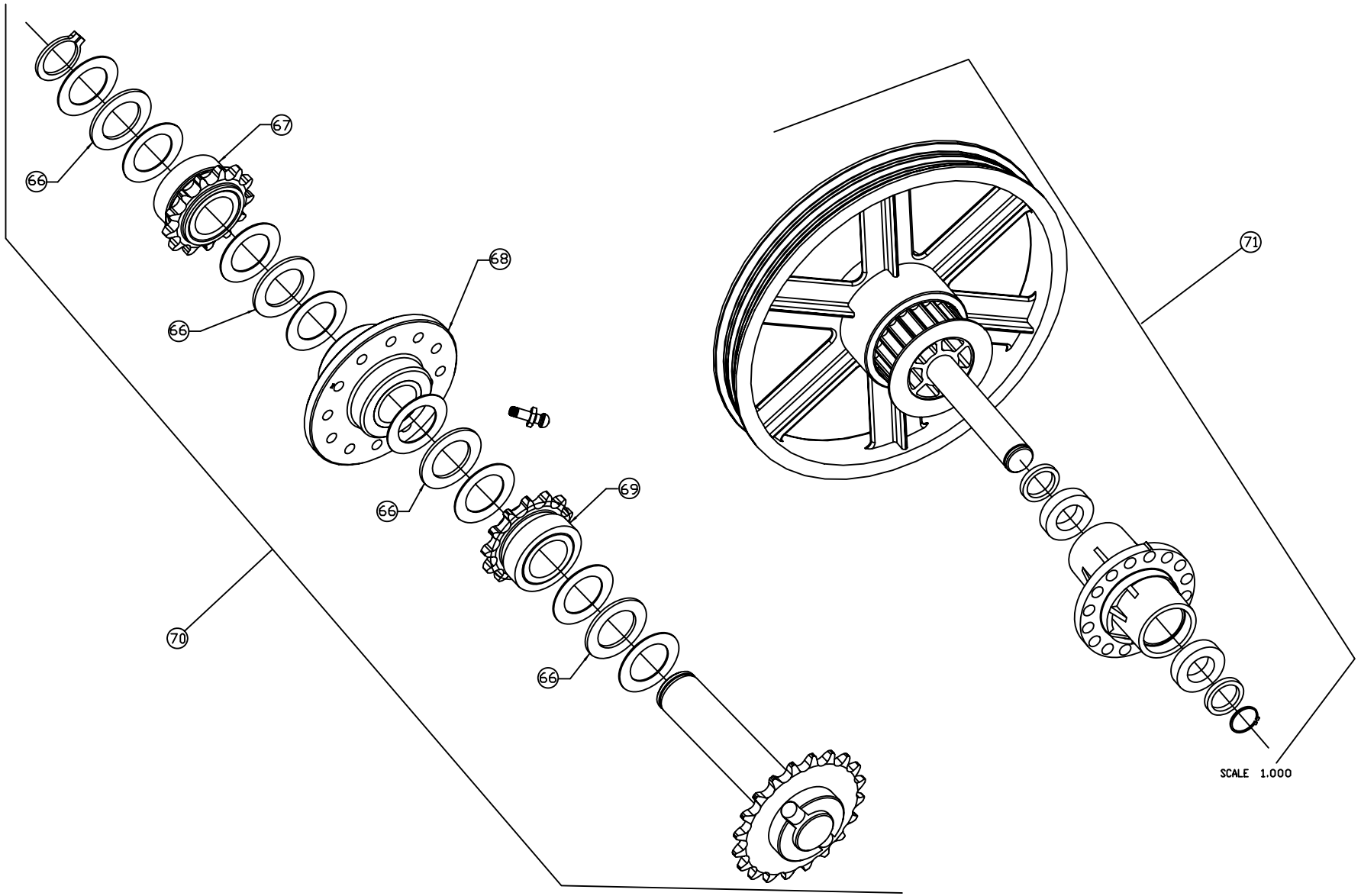

CONFIDENTIAL & PROPRIETARY
THIS DOCUMENT IS THE PROPERTY OF STAIRMASTER SPORTS/MEDICAL PRODUCTS, INC.
(SEE SHEET 1 FOR FULL TEXT)

StairMaster

SIZE	D	DWG NO	4600CL VBOM
DRAFTER		SCALE:0.077	PLOT DATE:8/23/06

SHEET 3 OF 6

PRO/ENGINEER GENERATED DRAWING
FILE NAME:18001.DRW

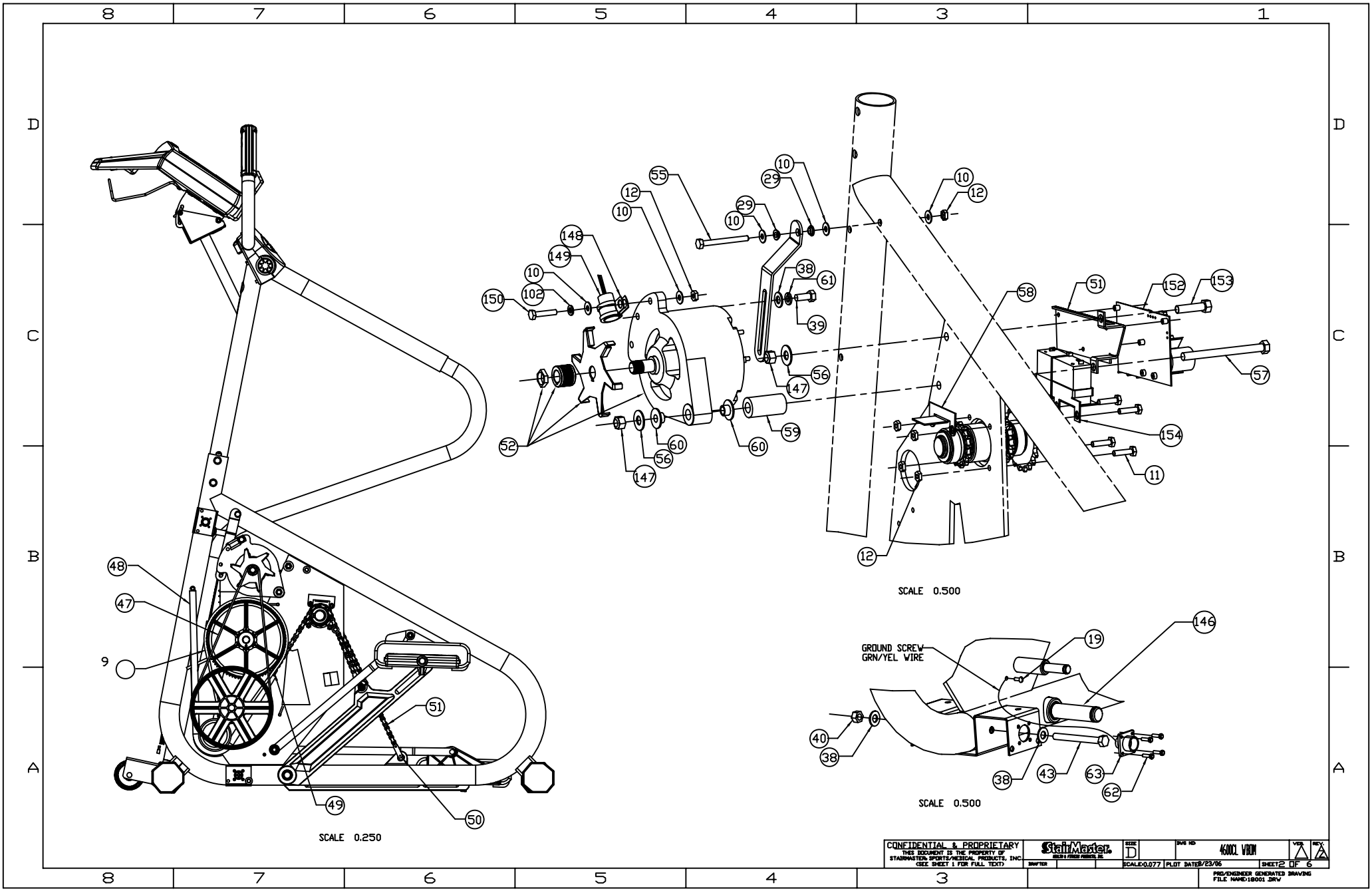

SCALE 0.250
SCALE 0.500
SCALE 0.500
GROUND SCREW
GRN/YEL WIRE
CONFIDENTIAL & PROPRIETARY
THIS DOCUMENT IS THE PROPERTY OF
STAIRMASTER® SPORTS/MEDICAL PRODUCTS, INC.
(SEE SHEET 1 FOR FULL TEXT)
StairMaster
SIZE D
DWG NO 4600CL VIBOM
VER. A
REV. A
DRAFTER
SCALE:0.077
PLOT DATE:8/23/06
SHEET 2 OF 6
PRO/ENGINEER GENERATED DRAWING
FILE NAME:18001.DRW

NOTES:

1. CONNECT WIRES TO CONTACT PLATES AS SHOWN.

REVISIONS			
REV	DESCRIPTION	DATE	DRAFTER
A	RELEASED FOR PRODUCTION PER ECO #8114	9/6/01	RH
A1	REVISED PER ECO #8347	4/23/02	RH
B	REVISED PER ECO #8736	6/20/03	RH
C	REVISED PER ECO #901300	12/23/03	RH

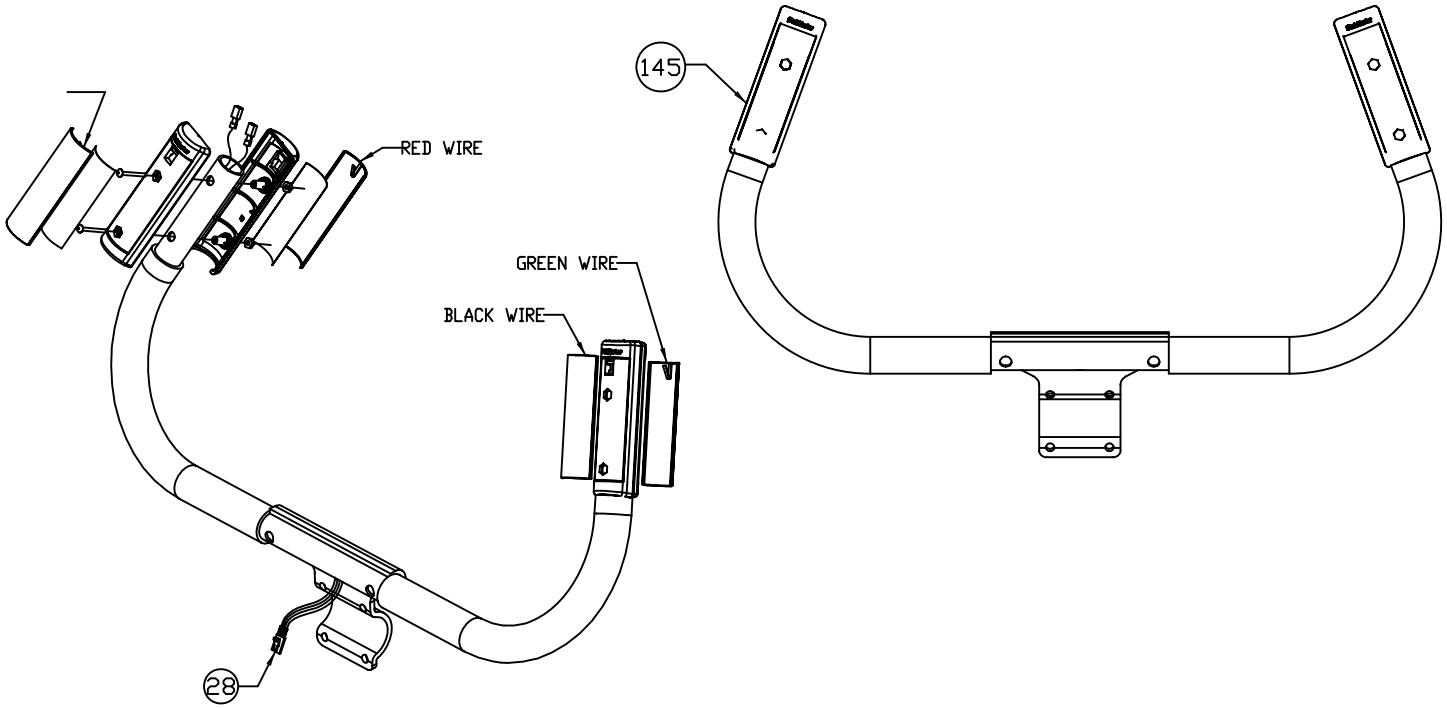

TOLERANCES	
.X ±.1 .XX ±.03 .XXX ±.010	ANGLES: BENT ±2° MACHINED ±0°30'

UNLESS OTHERWISE SPECIFIED:
1. DO NOT SCALE DRAWING
2. ALL DIMENSIONS ARE IN INCHES
3. ALL DIMENSIONS APPLY BEFORE PLATING OR COATING
4. REMOVE ALL BURRS BREAK SHARP EDGES .020 MAX ALL MACHINED SURFACES 125
5. ALL VIEWS 3RD ANGLE PROJECTION

CONFIDENTIAL & PROPRIETARY
THIS DOCUMENT IS THE PROPERTY OF STAIRMASTER® SPORTS/MEDICAL PRODUCTS,INC. IT MAY NOT BE REPRODUCED IN WHOLE OR IN PART, PROVIDED TO THIRD PARTIES, OR USED FOR ANY PURPOSE OTHER THAN THE PERFORMANCE OF WORK FOR STAIRMASTER, WITHOUT WRITTEN AUTHORIZATION. ALL RIGHTS ARE RESERVED INCLUDING COPYRIGHTS.

PROD/PUR MGR.	
MFG. ENGR.	
DSGN. ENGR.	
ENGRG. MGR.	
MATERIAL	N/A
FINISH	N/A

StairMaster® HEALTH & FITNESS PRODUCTS, INC.

TITLE: ASSEMBLY, HANDLE, UPPER, 4600, GEN II

SIZE	RELEASED FOR PRODUCTION ECO 8114	DWG NO	VER.	REV.
C		4600CL WBOM	A	C

SCALE 0.375 | PLOT DATE: 12/23/03 | 6 OF 6

PRO/ENGINEER GENERATED DRAWING
FILE NAME12297 .DRW

4600CL, WBOM, DOM/INT'L, BLK/GRY/SILVER

SKU: #SM180003 #SM188003 #SM188003B-GRY #SM180303 #SM180103 #SM188103

REF. NO.	PART NO:	DESCRIPTION
1	SM12297-03	ASSEMBLY HANDLE, UPPER 4600, **BLK**
2	SM25592	ASSY,HNDLE,UPPER,STPPR,NLS, **SILVER**
3	SM21415	ASSY,MAIN CABLE,CLMB SYS,CL,HM **PRE 8/00**
4	SM27828	ASSY CABLE, C40 4400/4600 CL **AFTER 8/00**
5	SM18002-03	WELDMENT,NECK,4600, **BLK**
6	SM25594	WELDMENT,NECK,STEPPER,NLS, **SILVER**
7	SM21590-03	BRACE,ALTERNATOR,4400 PT/CL,WB
8	SM24953-07	ASSY,MID COVER W/DECALS,**GRY**
9	SM21529	BELT,HTD,8MM,800MM LONG
10	SM22047	WASHER,FLAT,1/4 ID X 5/8 OD
11	SM22026	SCREW,.250-20X1.00,HEX HD CAP
12	SM22036	NUT,.250-20,NYLON INSERT
13	SM21462	WASHER,FLAT,.38,SS
14	SM21519	PULLEY,SPRING,4200/4400
15	SM22143	RING,SNAP, 3/8"
16	SM25978	WHEEL, 3" DIA.
17	SM21774	PIN,HITCH
18	SM22326	PIN,CLEVIS
19	SM22150	SCREW,#10-24 X .38 ZINC PLATED
20	SM18029-03	(CS)MAINFRAME,STD,4600,**BLK**
21	SM18032-03	(CS)MAINFRAME,INT,4600,**BLK**
22	SM25872	(CS)MAINFRAME,STD,4600,**SILVER**
23	SM25873	(CS)MAINFRAME,INT'L,4600, **SILVER**
24	SM20188	MOUNT, SHOCK
25	SM20008	LINK,MASTER,#41
26	SM22347	CHAIN,TRANSMISSION,4200/4400
27	SM27839	SUPPRESSOR, FERRITE TOROID
28	SM27840	ASSY CABLE, CONTACT HR 4600
29	SM22983	WASHER,SHOULDER,.25 ID,NYLON
30	SM21449	SCREW,.250-20 X 4.50 HEX HD CP
31	SM18027	ASSY,CONSOLE KNOB,4600
32	SM22138	WASHER,.250 INTERNL TOOTH LOCK
33	SM18006-03	BRACKET,CONSOLE,RIGHT,4600
34	SM25530	BRACKT,CONSOL,LEFT,4600.NLS, **SILVER**
35	SM18007	BRACKET,CONSOLE,LEFT,4600
36	SM25529	BRACKT,CONSLE,RIGHT,4600,NLS, **SILVER**
37	SM21616	INSERT,NECK,2400/4400
38	SM22075	WASHER,.312 USS FLAT
39	SM22093	SCREW,.312-18X.75,HEX HD CAP
40	SM22032	NUT,5/16-18 NC NYLON INSRT HEX
41	SM23054	NUT,#8-32,NYLON INSERT
42	SM13580	WASHER,#8 SAE FLAT
43	SM24271	SCREW,.312-18X3.00,HEX HD CAP
44	SM21447	ASSY.,RESISTOR,CLIMB.SYS,CL
45	SM23609	WASHER,FLAT,#8 FENDER,
46	SM25079	SCREW,8-32 NC X .62 PHIL PAN
47	SM21518	BELT,POLY-V,430J6
48	SM21093	SPRING, PEDAL RETURN

49	SM20157	KIT,MASTER LINK
50	SM21298	LINK, DOUBLE PITCH W/SLEEVE
51	SM20199	CHAIN,STEP CHN4ON P 37
52	SM22536	(CS)ASY,ALT,POLYV,4400CL,W/DSK
53	SM27801	KIT, C40 OVERLAY, JAPANESE **(BLACK CONSOLE)**
54	SM20205	ALTERNATOR,PRESTOLITE,1992 **(DOMESTIC ONLY)**
55	SM22175	SCREW,.250-20X3.00,HEX HD CAP
56	SM22030	WASHER, 3/8 USS FLAT
57	SM21448	SCREW,.375-16 x 4.50 HEX HD CP
58	SM21192	RETAINER, PEDAL CHAIN
59	SM21592-05	SPACER,ALTERNATOR,4400 PT/CL
60	SM22191	WASHER,SHOULDER,.38 I.D.
61	SM22070	WASHER,.312 SPIT LOCK
62	SM22663	SCREW,#6 X .50 PHIL,TYPE T
63	SM13597	ASSY,MAIN POWER,4400CL
64	SM24666-03	BRACKET,MNT,CVR,CL SYS,CL,W/B
65	SM25845	BRACKET,MNT,CVR,CL SYS,CL, **SILVER**
66	SM20198	BEARING, THRUST
67	SM10382	ASSY, SPROCKET LH
68	SM10400	(CS)ASSY,DRIVE,HUB
69	SM10383	ASSY, SPROCKET RH
70	SM10485	(CS)ASSY,DRIVE HUB & SHAFT
71	SM24897	(CS)ASSY,ECCENTRIC SHAFT
72	SM22618	(CS)ASSY,SPROCKET,80T
73	SM40216	KIT,FIRST REDUCTION
74	SM24747	BEARING,NEDL,DRWN CUP,17x23x12
75	SM21657	WASHER,.688 I.D. X .125 THICK
76	SM22878	SCREW,SET,SOCKET,.250-28 X .38
77	SM20006	SPROCKET, BS14 #41 CHAIN
78	SM22141	RING,SNAP,5/8",ZINC PLATED
79	SM22140	WASHER,FLAT 1.00 OD X .63 ID
80	SM12446	WASHER,WAVE,.751 I.D.
81	SM21793	ASSY,PEDAL,RH,CL SYS,V2
82	SM21366	WASHER,THRUST,.63 ID
83	SM10989-03	(CS)ASSY,ARM,PEDAL,RH,PB,**BLK**
84	SM25568	ASSY,ARM,PEDAL,RH,NLS, **SILVER**
85	SM10990-03	(CS)ASSY,ARM,PEDAL,LH, **BLK**
86	SM25567	ASSY,ARM,PEDAL,LH,NLS, **SILVER**
87	SM21794	ASSY,PEDAL,LH,CL SYS,V2
88	SM20213	RING, SNAP 3/4"
89	SM20214	RING, SNAP 3/8"
90	SM25569	ASSY,ARM,LEVELING,NLS, **SILVER**
91	SM10991-03	CS)ASSY,ARM,LEVELING, **BLACK**
92	SM21285K	KIT, LEVELING ARM UPGRADE, RT, **BLK**
93	SM21286K	KIT, LEVELING ARM UPGRADE, LT, **BLK**
94	SM25874	KIT,LEVELING ARM,W/PEDAL,RH, **SILVER**
95	SM25875	KIT,LEVELING ARM,W/PEDAL,LH, **SILVER**
96	SM25894	RING,SNAP,3/8",HEAVY DUTY
97	SM18054	PADS, PEDAL, SET
98	SM25454	BOLT, 1/4-20 X .75, HEX HEAD
99	SM18016-03	ASSY,LEFT HANDRAIL,4600, **BLK**
100	SM25595	ASSY,LH HANDRAIL,NLS, **SILVER**
101	SM20574	ADAPTER,HANDRAIL, 4000 PT/CT
102	SM22027	WASHER,.250 SPLIT LOCK
103	SM22116	SCREW,.250-20X2.50,HEX HD CAP

104	SM16747	KIT,LH,LOWER COVER,4600CL, **GRY**
105	SM18051-06	(CS)COVER,LH W/DECAL,4600CL,**BLK**
106	SM25882	(CS)CVR,W/DECAL,LH,4600CL, **CHARCOAL GREY**
107	SM18025-06	COVER,LEFT NECK,4600, **BLK**
108	SM18025-07	COVER,LEFT NECK,4600, **GRY**
109	SM25519	COVER,LEFT NECK,STEPPER, **CHARCOAL GREY**
110	SM16746	KIT,RH,LOWER COVER,4600CL, **GRY**
111	SM18050-06	(CS)COVER,RH W/DECAL,4600CL, **BLK**
112	SM25881	(CS)CVR,W/DECAL,RH,4600CL, **CHARCOAL GREY**
113	SM18024-06	COVER,RIGHT NECK,4600, **BLK**
114	SM18024-07	COVER,RIGHT NECK,4600, **GRY**
115	SM25518	COVER,RIGHT NECK,STEPPER, **CHARCOAL GREY**
116	SM18017-03	ASSY,RIGHT HANDRAIL,4600, **BLK**
117	SM25596	ASSY,RH HANDRAIL,NLS,SV, **SILVER**
118	SM22847	RIVET KIT (10 PER)
119	SM27819-20	XONSOLE,ASSEMBLY,ICHR C40, **BLK**
120	SM27819-99	CONSOLE ASSY,ICHR C40,INTERN, **BLK**
121	SM27819-90	CONSOLE, ASSY,ICHR, CJ40, JAP, **BLK**
122	SM27819GRY-99	CONSOLE ASSY,ICHR C40,INT, **GRY**
123	SM25844	ASSY,CONSOLE,ICHR C40,NLS, **CHARCOAL GREY**
124	SM40070-001	PCBA, DISPLAY, CJ40
125	SM27130	PCB ASSY,C40 PROCESS(M128)NON-
126	SM27767	IC, CONTACT HR W/MOUNT HEADER
127	SM25877	KIT,C40 OVERLAY, **(CHARCOAL GREY CONSOLE)**
128	SM27792	KIT, C40 OVERLAY **(BLACK CONSOLE)**
129	SM27793	KIT, C40 OVERLAY, INT'L , **(INT'L BLACK CONSOLE)**
130	SM18030	SHIELD,TOP,4600, **BLK**
131	SM25513	SHIELD,TOP,STEPPER,NLS, **CHARCOAL GREY**
132	SM18031	SHIELD,BOTTOM,4600, **BLK**
133	SM25512	SHIELD,BOTTOM,STEPPER,NLS, **CHARCOAL GREY**
134	SM22276	SCREW,#6 S.T. X .625 HEX OR TO
135	SM21578	GROMMET,NECK,2400/4400
136	SM24954-06	(CS)COVER,MID,W/DECALS, **BLK**
137	SM25880	(CS)CVR,MID,W/DECAL, **CHARCOAL GREY**
138	SM22086	RIVET,PANELS, PLASTIC
139	SM18028	SCREW,.250-20NC X 1.75 SOC CAP
140	SM22258	SCREW,.375-16x2.00,HEX HD CAP
141	SM18008	ADAPTER,HANDRAIL,4600
142	SM27783-03	WIREFORM ASSY, WATER BOTTLE
143	SM27791-03	WIREFORM,MAGAZINE HOLDER
144	SM25244	SCREW,.250-20X.50 BUTTON HD CP
145	SM12294K	ICHR, GEN II
146	SM24888	SHAFT,ARM,PEDAL,PRESSFIT
147	SM22029	NUT,.375-16,NYLON INSERT
148	SM22884	CLAMP,CABLE,11/16" DIA.
149	SM21445	ASSY.,SPEED SENSOR,CLIM.SYS,CL
150	SM22164	SCREW,.250-20X1.25,HEX HD CAP
151	SM21468-03	BRCKT,MNTING,PCB,4400CL,WB
152	SM24983	ASSY,POWER CONTROL BD,4400 CL
153	SM22257	SCREW,.375-16X1.50,HEX HD CAP
154	SM21489	BRACKET,MOUNTING,BATTERY
155	SM14123	BATTERY,6V
156	SM25075-06	(CS)COVER,MID,W/DECALS,,JPN, **BLK**
157	SM22900	ALTERNATOR,PRESTOLITE,RoHS, **(INT'L ONLY)**
NOT SHOWN	SM20859	POWER ADAPTER, 3 PRONG/2 PRONG

NOT SHOWN	SM11022	ASSY,POWER SUPPLY,JPN,CL
NOT SHOWN	SM22890	MANUAL,USER GUIDE,4600CL,JAPAN
NOT SHOWN	SM22867	MANUAL 4600 C-40
NOT SHOWN	SM23853	TOOL, REMOVAL, COVER FASTENERS
NOT SHOWN	SM25067	BATTERY CHARGER, BC-1
NOT SHOWN	SM22898	ADDENDUM,MANUAL,FREECLIMR, **SILVER**
158	SM25892SLV	KIT, C40 OVERLAY, JAPAN,SLVR