GENERAL MAINTENANCE REFERENCE MANUAL

1-800-331-3578
FAX: 425-814-0601
INTERNATIONAL: 425-823-1825
FAX: 425-820-7505
www.stairmaster.com

Printed in the United States.

Corporate Headquarters
12421 Willows Rd. N.E., Suite 100
Kirkland, WA 98034

1-800-331-3578
FAX: 425-814-0601
INTERNATIONAL: 425-823-1825
FAX: 425-820-7505
www.stairmaster.com

Table of Contents

THE FREECLIMBER® AND THE 4000 PT® EXERCISE SYSTEMS **6**
FreeClimber/4000 PT Electrical Theory 7
4600/4400/4200/4000 PT - ELECTRICAL TROUBLESHOOTING 9
4600/4400 CL - ELECTRICAL TROUBLESHOOTING 10
I. Section One -Testing With A Multimeter/Voltmeter 10
II. Section Two -Testing Without A Multimeter/Voltmeter 11
FreeClimber/4000 PT - Mechanical Troubleshooting 12
FreeClimber/4000 PT Maintenance Schedule 14
THE STEPMILL® 7000 PT, STEPMILL, AND GAUNTLET EXERCISE SYSTEMS **27**
Stepmill 7000 PT /Gauntlet Electrical Troubleshooting 28
Stepmill/Gauntlet Electronic Relay Diagnosis 31
Gauntlet Electrical Troubleshooting 33
7000 PT/Stepmill/Gauntlet Mechanical Troubleshooting 34
7000 PT/ Stepmill /Gauntlet Maintenance Schedule 35
THE GRAVITRON® 8000 ..... **46**
Individual Parts Description 46
Gravitron 8000 General Troubleshooting 47
Gravitron 8000 Specific Troubleshooting 48
THE CROSSROBICS® EXERCISE SYSTEMS **52**
Crossrobics Electrical Troubleshooting 53
Crossrobics Mechanical Troubleshooting 54
Crossrobics Maintenance Schedule 55
THE STRATUS SYSTEMS **62**
3300 CE/3900 RC Stratus Systems - Electrical Troubleshooting 63
3300 CE/3900 RC Stratua Systems - Mechanical Troubleshooting 64
Stratus Maintenance Schedule 65
THE MOMENTUM SYSTEMS **85**
Momentum - Electrical Troubleshooting 86
Momentum- Mechanical Troubleshooting 88
Momentum Maintenance Schedule 89
THE LEMOND® REVMASTER® **101**
STAIRMASTER SPARES/SERVICE KITS **109**
THE POPULAR STAIRMASTER 4000 PT — THE STAIR FACTS **113**
HIGH POINTS OF INTEREST **114**

LIST OF ILLUSTRATIONS

Figure 1: Final Assembly - Left, 4600 PT 15
Figure 2: Final Assembly - Right,4600 PT 16
Figure 3: Final Assembly - Left, 4600 CL 17
Figure 4: Final Assembly - Right, 4600 CL 18
Figure 5: Covers - 4600 PT/CL 19
Figure 6: Pedal Arm Assembly & First Reduction Shaft Assembly
(4600/4400 PT/CL, 4200 PT) 20

Figure 7: Drive Shaft Assembly & Eccentric Hub Assembly
(4600/4400 PT/CL, 4200 PT) 20
Figure 8: Final Assembly - Left, 4400/4200 PT 21
Figure 9: Final Assembly - Right, 4400/4200 PT 22
Figure10: Final Assembly - Left, 4400 CL 23
Figure 11: Final Assembly - Right, 4400 CL 24
Figure 12: Covers - 4400 PT/CL, 4200 PT 25
Figure 13: Parts Needing Periodic Lubrication 26
Figure 14: Side Cover and Handrail Assemblies 36
Figure 15: Poly-V Belt Tension 37
Figure 16: Drive Chain Assembly 38
Figure 17: Step Assembly 39
Figure 18: Step Chain and Sprocket Assemblies 40
Figure 19: Transmission and Alternator Assemblies 41
Figure 20: Wiring Diagram 1 42
Figure 21: Wiring Diagram 2 43
Figure 22: Wiring Diagram 3 45
Figure 23: Right Side View -1650 LE 56
Figure 24: Left Side View - 1650 LE 57
Figure 25: Pedal Arm Assembly 58
Figure 26: Right Side View - 2650 UE 59
Figure 27: Top View - 2650 UE 60
Figure 28: Weight Stack Assembly 61
Figure 29: 3300 CE - Right Side View 67
Figure 30: 3300 CE - Left Side View 68
Figure 31: 3900 RC - Right Side View 69
Figure 32: 3900 RC - Left Side View 70
Figure 33: 3300 CE - Seat Adjustment Pin 71
Figure 34: 3900 RC - Seat Assembly 72
Figure 35: Drive Chain Assembly 73
Figure 36: Intermediate Shaft Assembly 74
Figure 37: J-Bolt Assembly 75
Figure 38: Crank Assembly 76
Figure 39: Alternator Assembly 77
Figure 40: Final Assembly - Right Side View, 3400 CE 90
Figure 41: Final Assembly - Left Side View, 3800 RC 91
Figure 42: Seat Post Assembly, 3400 CE 92
Figure 43: Seat Assembly, 3800 RC 93
Figure 44: Seat Track Assembly, 3800 RC 94
Figure 45: Intermediate Poly-V Assembly 95
Figure 46: Crank Assembly 96
Figure 47: Alternator/Flywheel Assembly 97
Figure 48: Wire Connections 98
Figure 49: Power Control Board Plug Ins 99
Figure 50: Wiring Diagram 100

THE FREECLIMBER® AND THE 4000 PT® EXERCISE SYSTEMS

4600 CL

The FreeClimber line includes the new fully featured FreeClimber 4600 PT and the cordless FreeClimber 4600 CL, along with the FreeClimber 4400 PT and the cordless FreeClimber 4400 CL with Polar® Heart Rate Monitor, and the cost-efficient FreeClimber 4200 PT – all designed especially for health clubs.

The StairMaster® FreeClimber and the 4000 PT exercise systems are vertical climbing machines with an independent step action. The independent step action, combined with the patented pedal geometry featured on all StairMaster steppers, provides an aerobic workout equivalent to uphill running or climbing stairs, but without the high-impact pounding to the joints and muscles.

4000 PT

FREECLIMBER/4000 PT® ELECTRICAL THEORY

•**Power supply** is unregulated (old style), and a proper reading will range between 15 - 17 VDC. Under load, the output should be between 9-12 VDC. The new style power supply is regulated under load to 12 VDC, and has an output reading between 12-19 VDC. Varied resistance is achieved by a pulsed field signal.

•**AC tap of alternator** - Tells the console that the alternator is spinning, and how fast it is spinning.

•**AC tap (blue wire)** - Carries signal to the console.

•**Console** - Reads AC tap signal sent through the blue wire, and sends another signal back down the brown wire to the alternator.

•**Alternator** - Provides the resistance, which is varied by the pulsed field signal sent from the console. The positive signal that is sent from the console through the brown wire to the field terminal creates resistance in the alternator.

•**Diode** - Allows negative (-) signal from alternator to pass to ground. A good diode will not allow signal back through to the alternator and console. If the signal does pass back through, (i.e. shorted diode) the alternator will not provide proper resistance.

•**B+, positive output** - Takes current created from alternator to the load resistor and dissipates it as heat into the main frame.

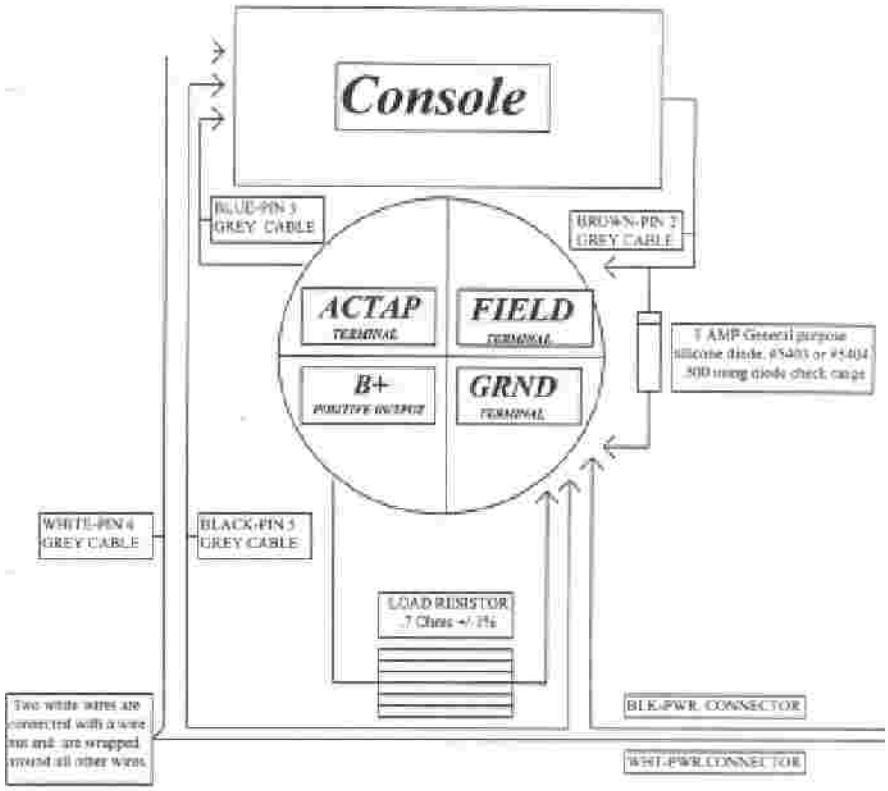

GRAY CABLE PIN CONFIGURATION

PIN 1 - NOT USED
PIN 2 - FIELD TERMINAL - BROWN
PIN 3 - AC TAP - BLUE
PIN 4 - POWER - WHITE
PIN 5 - GROUND - BLACK
PIN 6 - NOT USED

NOTES:

FREECLIMBER/4000 PT® ELECTRICAL CIRCUIT TESTS

Positive Output to Field Test

This test should be used on machines with a "no-resistance" problem.

Turn power off.
Remove black wire from B+ terminal on alternator.
Remove brown wire from field terminal on alternator.
Place alligator clips on the B+ terminal and the field terminal of the alternator.
Run on machine for 10-15 seconds.
If full resistance is achieved during this time, your alternator has correct current flow. It is accepting current (field) and producing current (B+).
Replace the alternator if no resistance is found

*Don't forget about the possibility of mechanical resistance. Worn chains, bushings, etc., may provide some resistance.

Field Circuit

Check VDC at the end of removed brown wire.
Perform the positive output to field test on the alternator.
Check the diode (.500-diode check range).

AC Tap

** For 4000 PT machines prior to 11/97*

If you are not getting an "Enter Weight" prompt when you step on the pedals, perform this test with the power on:

Remove blue wire from alternator.
Remove wire nut from where the two white wires come together.
Momentarily touch the 2 white wires to the blue wire.
If "Enter Weight" appears, then the alternator is bad.
Check continuity of blue wire, and cross check against all other wires.
Swap consoles if available.

4600/4400/4200/4000 PT® - ELECTRICAL TROUBLESHOOTING

Please refer to your owner's manual for detailed instructions. If you do not have an owner's manual please call our Customer Service phone number to order one.

1. Verify AC voltage at wall outlet (110 - 120 VAC).

2. Verify AC voltage at end of AC cord (110 - 120 VAC).

3. Verify DC voltage from the power supply. You should get 12-17 VDC if your DC cable detaches from the power supply, and 10-12 VDC if your DC cable does not detach from the power supply and is prior to 10/27/97. If the power supply is a newer style and has part number 24379 (PS-5), or part number 24381(PS-7), you should get 12-19 VDC.

4. Verify DC voltage at the end of DC cable (shake cable during test).

5. Verify DC voltage at power connector (are wires firmly attached to molex connector?).

6. Check all wiring connections on alternator.

7. Verify DC voltage drop under load by measuring voltage at the white wires, using the alternator casing as a ground. Use leads with alligator clips to eliminate the need for an assistant. Voltage under load should be between 9-12 VDC on the older style, and no less than 12 VDC on the newer style power supply.

8. Verify DC voltage on the grey cable (pins 4 & 5 - 4000 PT, pins 1 & 9 - 4600/4400/4200 PT).

9. Test diode – Remove the diode from the alternator. Place the leads from your voltmeter on either side of the diode touching the wire. Place your voltmeter selector switch on the diode check setting. Your digital voltmeter should read 0.5 Volts. Now reverse your leads. You should get overload (O.L.).

10. Test continuity of the grey cable/cross check.

11. Test load resistor (0.7 Ohms-for the gold metal resistor and 0.5 Ohms for the ceramic resistor).

12. Perform the Positive output to field test on the alternator:
    - Turn the power off.
    - Remove the black wire from the B+ terminal on alternator.
    - Remove the brown wire from the field terminal on the alternator.
    - Place alligator clips on the B+ terminal and on the field terminal of alternator.
    - Run on the machine for 15-20 seconds.
    - If full resistance is achieved during this time, your alternator has correct current flow it is accepting current (field) and producing current (B+).

13. Swap consoles, power supply and cables to verify problem stays with machine.

4600/4400 CL - ELECTRICAL TROUBLESHOOTING

I. Section One -Testing With A Multimeter/Voltmeter

1. Check all wiring and connections: ensure that the *inductive switch* Molex and *resistor* Molex are not reversed on the power supply board.

2. Check the battery voltage with your test resistor installed between the battery leads. The battery voltage should be 6.1 VDC or greater.

3. Check battery DC voltage at power supply board at TP2 and TP6 (6.0 VDC).

4. Remove inductive switch Molex from power supply board and test AC voltage at pins 1 and 2 while stepping (**minimum** 3.5 VAC).

5. Remove gray cable connector at power supply board. Check AC voltage at TP1 and TP2 on power supply board while stepping (**minimum** 3.5 VAC).

6. Reconnect the gray cable at the power supply board and remove console. Test AC voltage in pins 2 and 4 in the end of the gray cable while stepping (**minimum** 3.5 VAC).

7. Ohm and cross check main cable.

8. Ohm load resistor (2.5 Ohms).

9. Perform the following positive output to field test:
   - Disconnect battery from power supply board.
   - Remove black wire from B+ terminal on alternator.
   - Remove brown wire from field terminal on alternator.
   - Place alligator clips on the B+ terminal and the field terminal of alternator
   - Run on machine for a few seconds.
   - If full resistance is achieved during this time, your alternator has correct current build up from residual magnetism to field coil.

10. Replace the power supply board.

II. Section Two -Testing Without A Multimeter/Voltmeter

1. Inspect power supply board connectors at the following locations: load resistor (J6), inductive switch (J3), console (J4), and external power supply (J1). Check for no frayed wires on battery connector (J5) or alternator connector (J2).

2. Inspect U3, Q5, Q6 and Q7 to make sure that the hardware is tightened, there is sufficient heatsink grease/sil pad, and that the solder is good. Check for plastic spacers between Q6 heatsink and Q7 heatsink.

3. Perform the "Jump Test":

   Jump test point JP1 on the internal power board. To do this, "bridge" the two small holes located at "JP1" with a small flat blade screwdriver, a small wire, or a paper clip. When you do this, does the console power up?

   YES - Adjust the inductive switch closer to the alternator fins. Make sure the sensor (inductive switch) is as close to the alternator fins as possible without actually touching the fins when in motion. **Go to step 3a**.

   NO - Swap the battery with one that is know to be good (from another machine that is known to be working). **Go to step 3b**.

   3a. Operate the unit as if performing a normal exercise session. If unit fails to operate properly, replace inductive switch and retest unit.

   3b. Operate the unit as if performing a normal exercise session. If unit fails to operate properly, adjust inductive switch and perform step 3a.

FREECLIMBER/4000 PT® – MECHANICAL TROUBLESHOOTING

For machines with a Bison transmission

1. Remove alternator belt and inspect for cracks, fraying or any other unusual or excessive wear.

2. Spin alternator pulley to check bearings. Inspect alternator pulley for wear.

3. Check that the transmission pulley set screw is tightened on the flat side of the shaft (check alternator/ transmission pulley alignment).

4. Remove the drive chain and inspect for frozen links.

5. Spin the transmission drive sprocket input one complete revolution. The transmission pulley output should turn 19 times.

6. Check that the transmission drive sprocket set screw is tight.

7. Remove step chains/return springs from frame. Inspect chains for frozen links.

8. Make sure step chain connection points pivot freely and have no vertical play.

9. Remove pedals, pedal arms and leveling arms. Lubricate accordingly (Refer to the recommended General Maintenance Schedule, or your owner's manual).

10. Inspect Hub assembly for wear and verify that the drive sprockets freewheel in the forward direction and lock in the other.

11. Check drive shaft for radial endplay and excessive side-to-side play (more than 1/8").

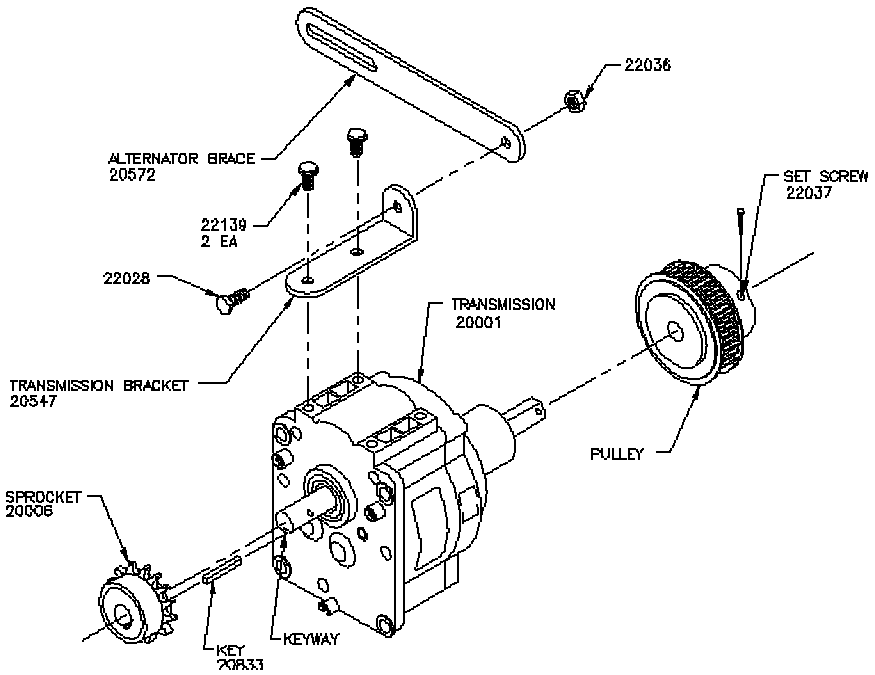

BISON TRANSMISSION DETAIL

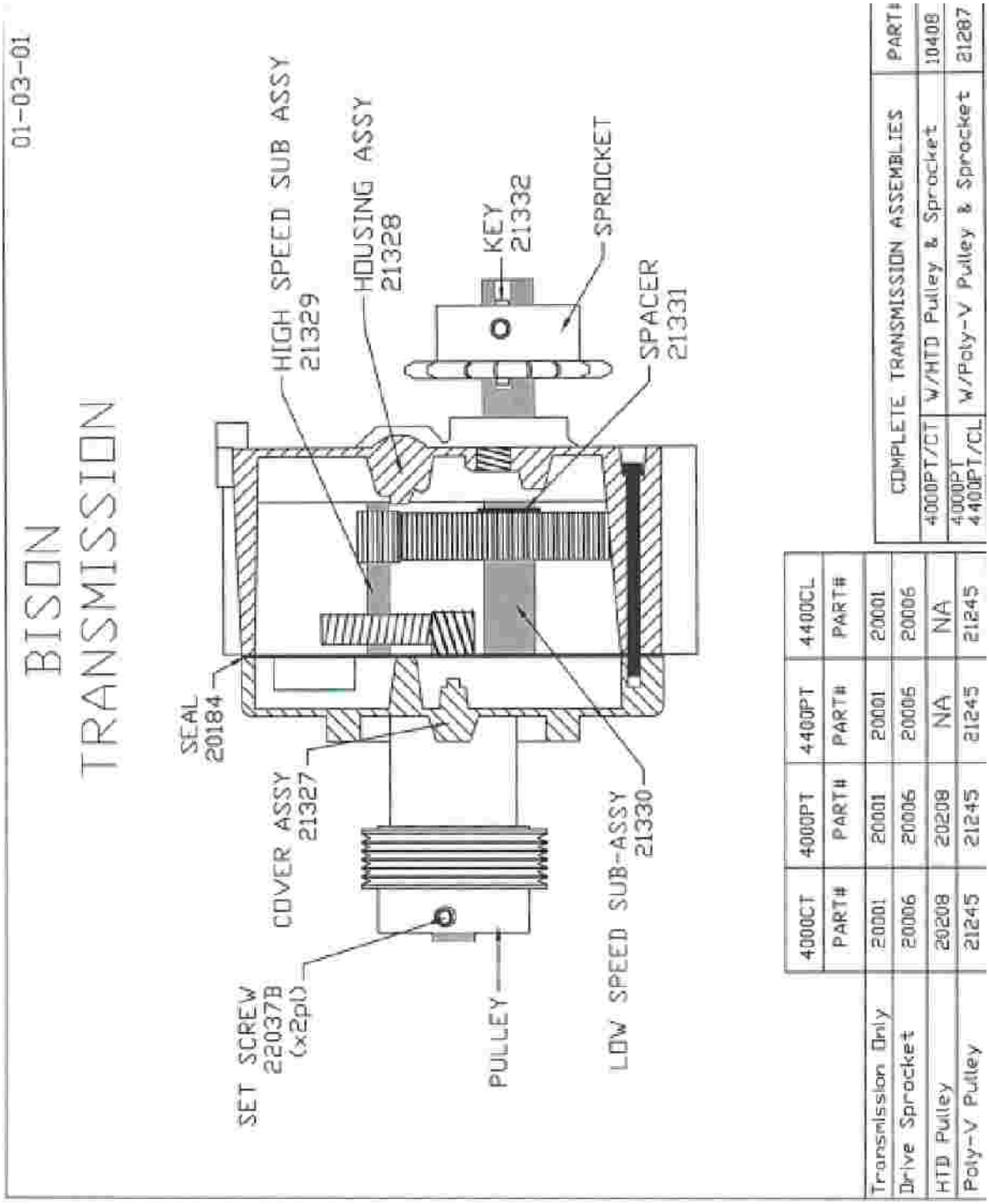

	4000CT	4000PT	4400PT	4400CL
	PART#	PART#	PART#	PART#
Transmission Only	20001	20001	20001	20001
Drive Sprocket	20006	20006	20006	20006
HTD Pulley	20208	20208	NA	NA
Poly-V Pulley	21245	21245	21245	21245

COMPLETE TRANSMISSION ASSEMBLIES		PART#
4000PT/CT	W/HTD Pulley & Sprocket	10408
4000PT 4400PT/CL	W/Poly-V Pulley & Sprocket	21287

FREECLIMBER® - MECHANICAL TROUBLESHOOTING

For machines with a "T-2" transmission

1. Remove alternator belt and inspect for cracks, fraying or any other unusual or excessive wear.

2. Spin alternator pulley to check bearings and check pulley for wear.

3. Remove HTD belt and inspect for cracks, fraying or any other unusual or excessive wear.

4. Spin Eccentric Shaft Assy to check bearings and inspect for excessive wear.

5. Remove the drive chain and inspect for frozen links.Check that the transmission drive sprocket set screw is tight.

6. Spin First Reduction Shaft Assy to check bearings and inspect for excessive wear.

7. Remove step chains/return springs from frame and inspect the chains for frozen links. Make sure step chain connection points pivot freely and have no vertical play.

8. Remove pedals, pedal arms and leveling arms. Lubricate accordingly.

9. Inspect Hub assembly for wear.

10. Verify that drive sprockets freewheel in the forward direction and lock in the other direction.

11. Check drive shaft for radial endplay and excessive side to side play (more than 1/8").

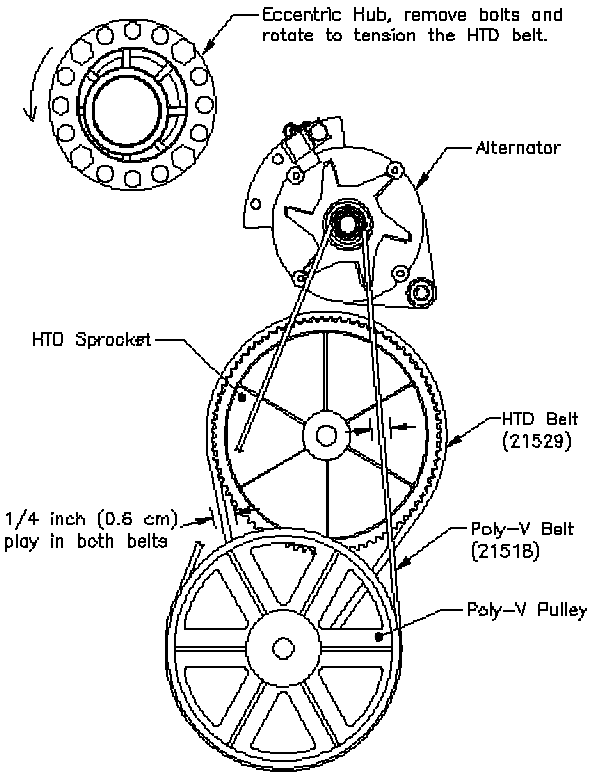

FREECLIMBER /4000 PT® MAINTENANCE SCHEDULE

This is a quick reference guide to preventive maintenance for the 4600/4400/4200/4000 Exercise Systems. Please refer to the owner's manual that is provided with each machine for complete service, repair and operating instructions.

PART	RECCOMENDED ACTION	FREQUENCY	CLEANER	LUBRICANT
Console	Wipe Clean	Daily	Water	N/A
Covers	Clean and Inspect	Daily	Diluted house hold cleaner	N/A
Drive and Step Chains	Lubricate	Each week or after 70 hours	N/A	30W motor oil
	Remove, clean and lubricate	Every 3 months or 900 hours	Degreaser	30W motor oil
Step Chain Connection Points	Clean and lubricate	Every 3 months or 900 hours	Clean, dry rag	Multi purpose grease
Spring Pulley Shafts	Clean and lubricate	Every 3 months or 900 hours	Clean, dry rag	Multi purpose grease
Pedal Shafts & Leveling Arm Pins	Clean and lubricate	Every 3 months or 900 hours	Clean, dry rag	Multi purpose grease
Pedal Arm Return Springs	Inspect and wipe down	Each week or after 70 hours	N/A	Clean, oil dampened rag
Pedal Arm Shafts	Clean and lubricate	Every 3 months or 900 hours	Clean, dry rag	Multi purpose grease
Battery	Check Voltage	Every 3 months or 900 hours	N/A	N/A
Belts	Inspect & adjust tension	Every 3 months or 900 hours	N/A	N/A

Note: Use of lubricants other than those specified will result in diminished performance and a shorter life span for that part.

Figure 1: Final Assembly - Left, 4600 PT

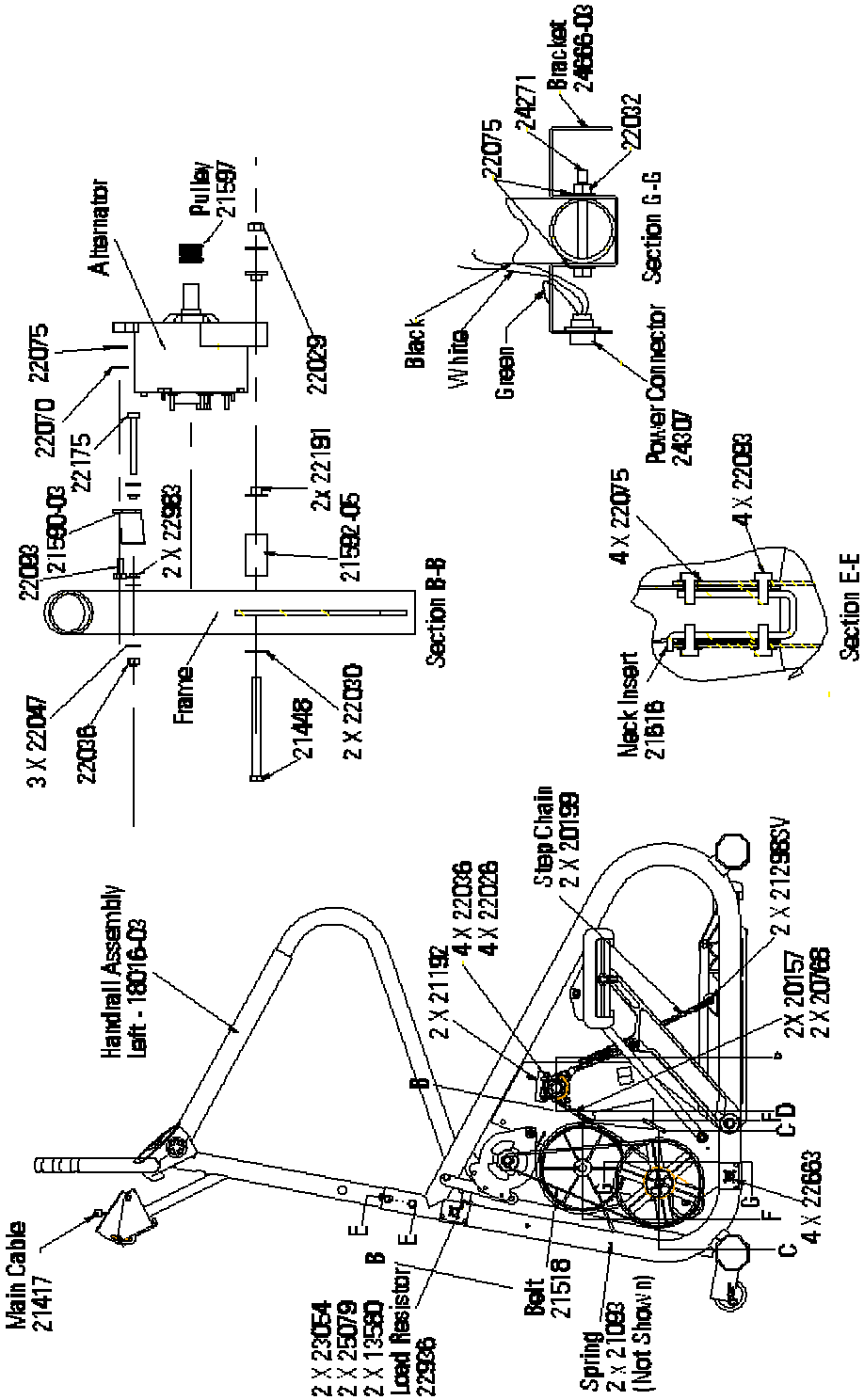

Figure 2: Final Assembly - Right,4600 PT

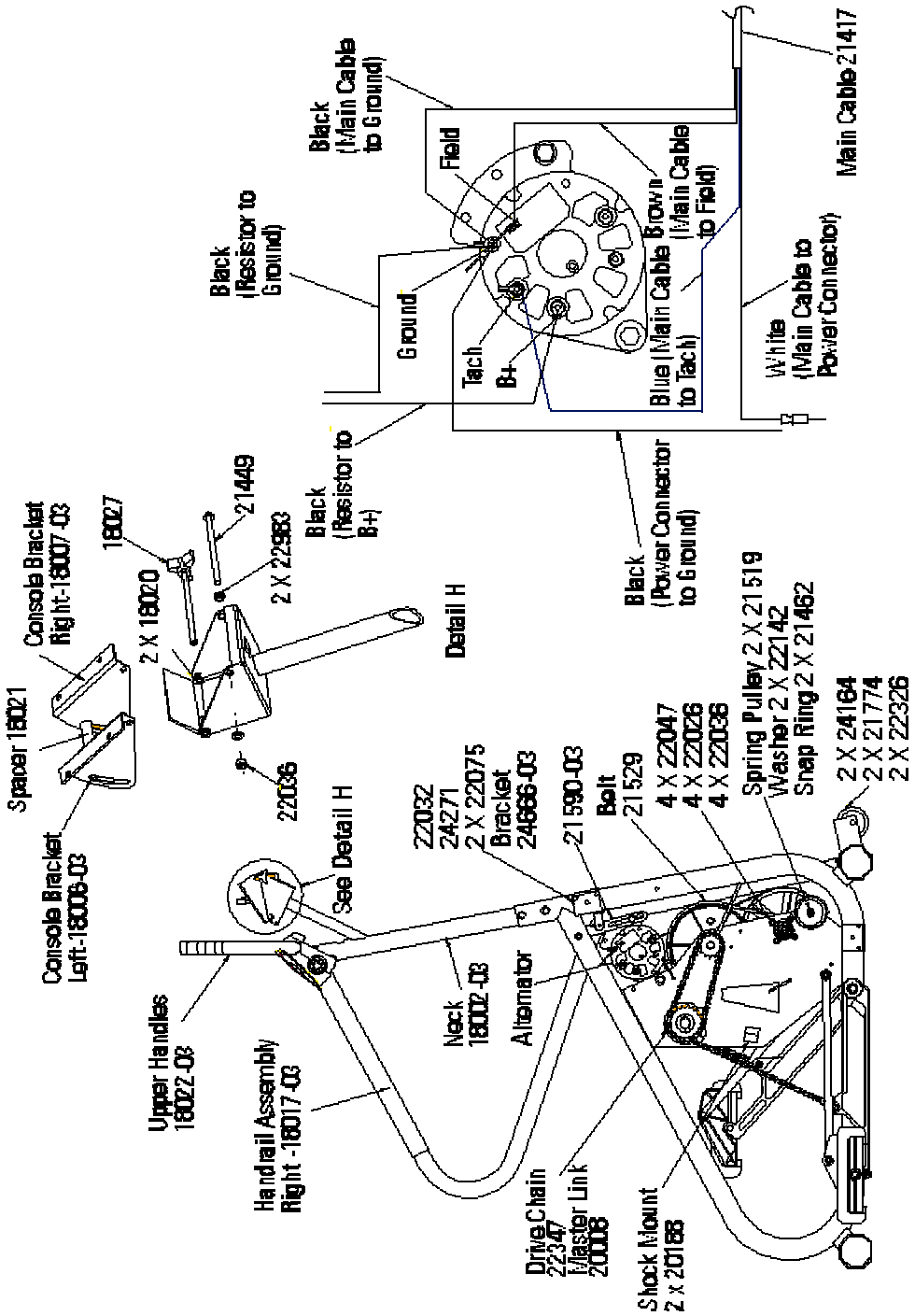

Figure 3: Final Assembly - Left, 4600 CL

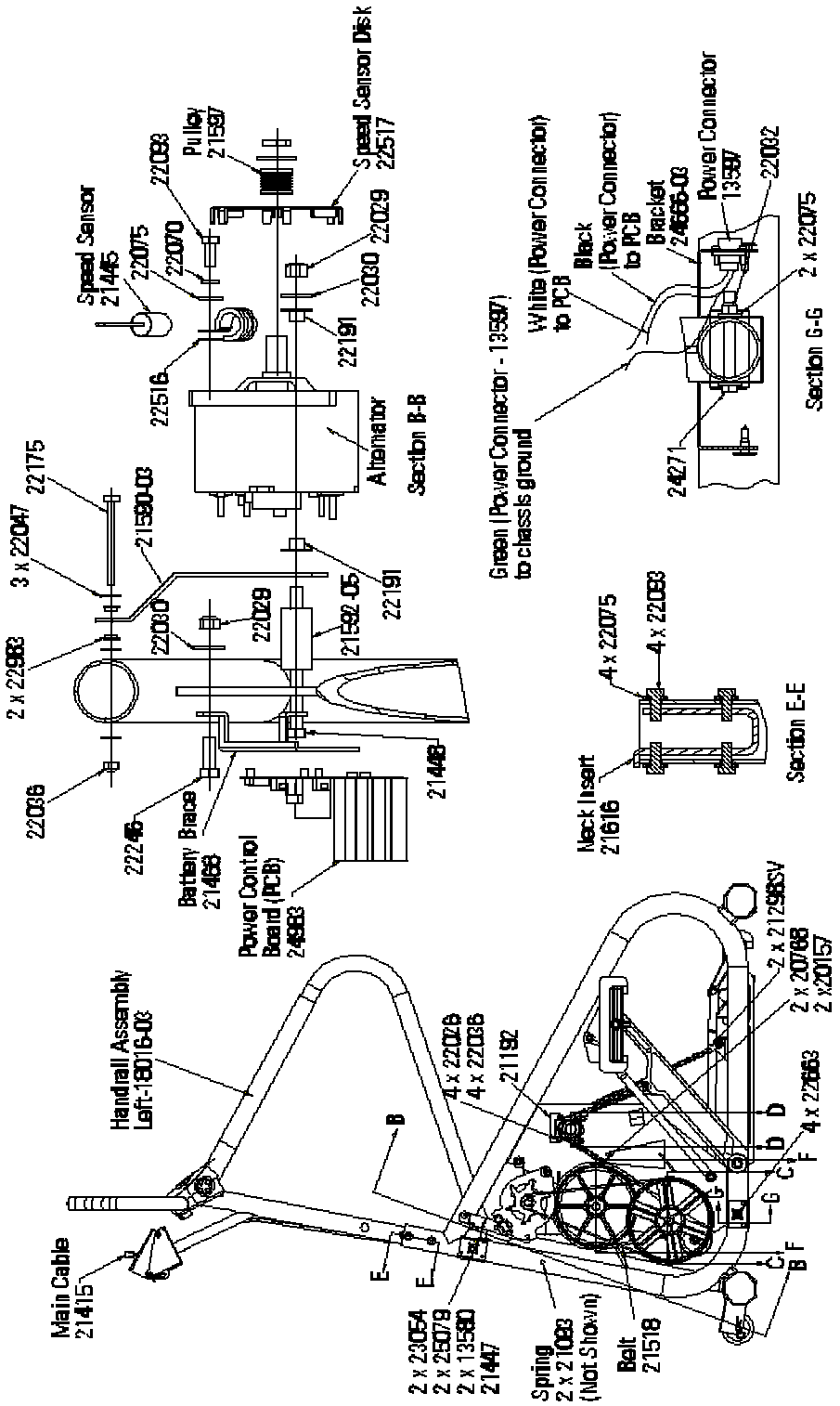

Figure 4: Final Assembly - Right, 4600 CL

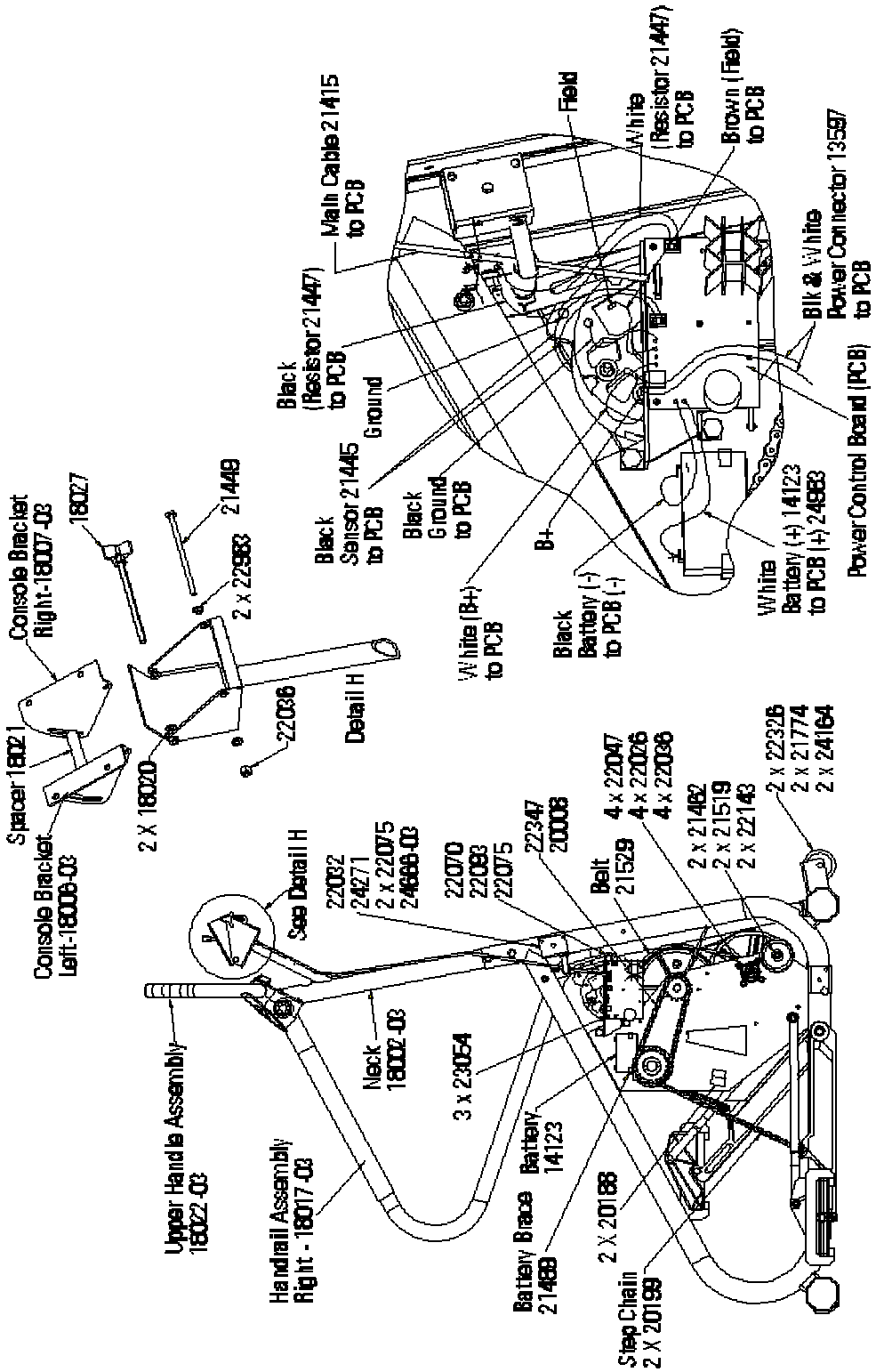

Figure 5: Covers - 4600 PT/CL

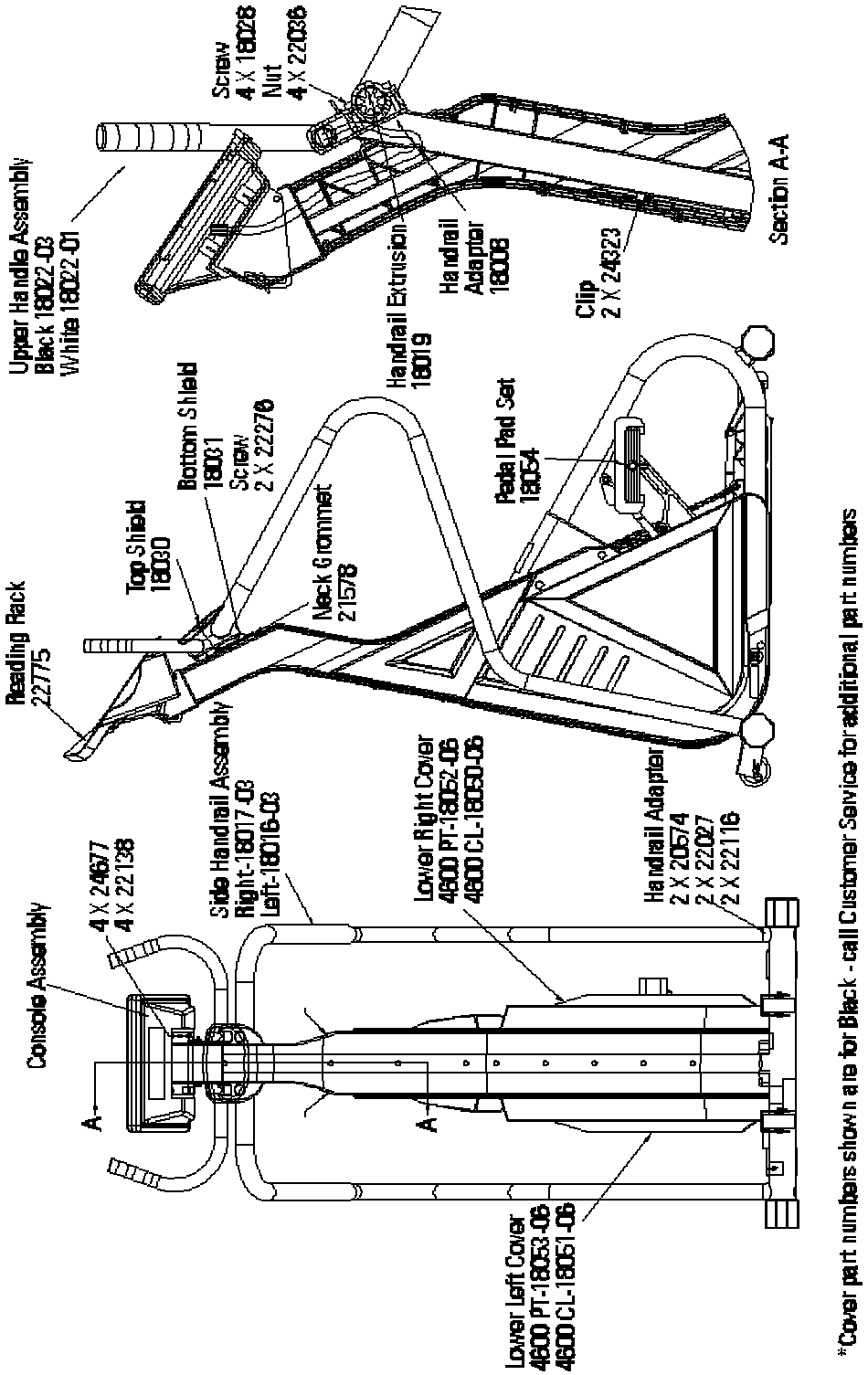

Figure 6: Pedal Arm Assembly & First Reduction Shaft Assembly (4600/4400 PT/CL, 4200 PT)

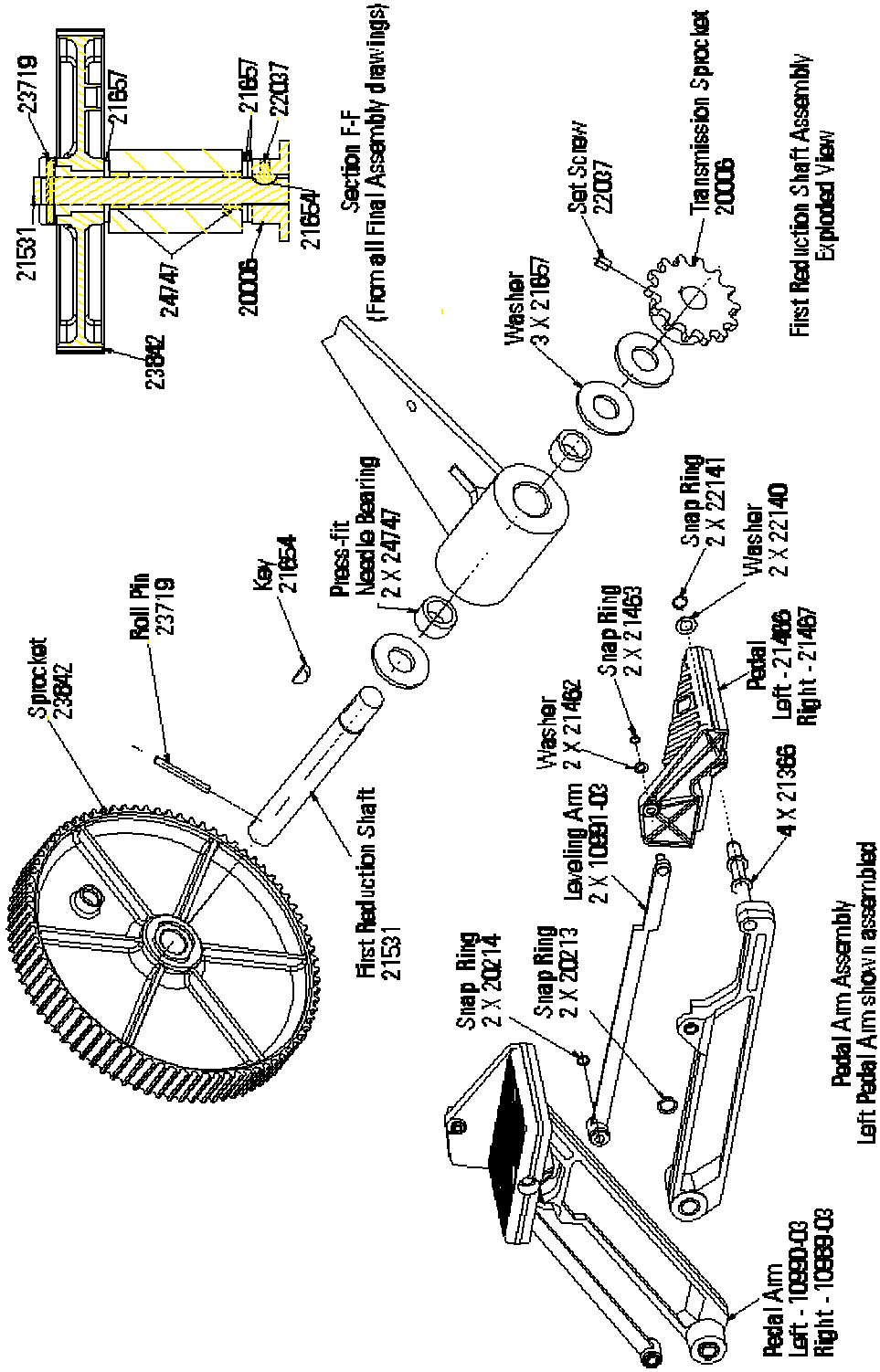

Figure 7:Drive Shaft Assembly & Eccentric Hub Assembly
(4600/4400 PT/CL, 4200 PT)

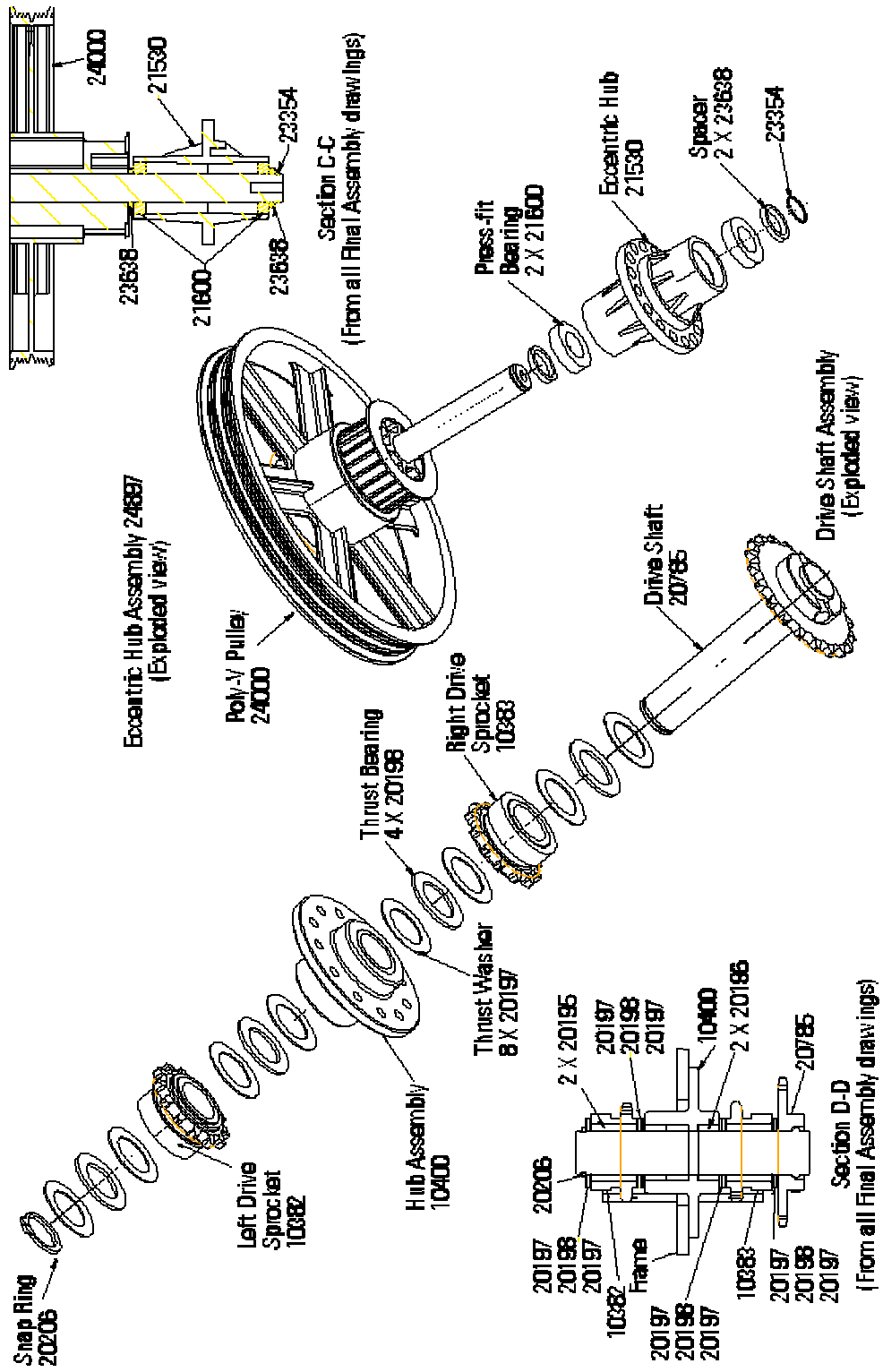

Figure 8: Final Assembly - Left, 4400/4200 PT

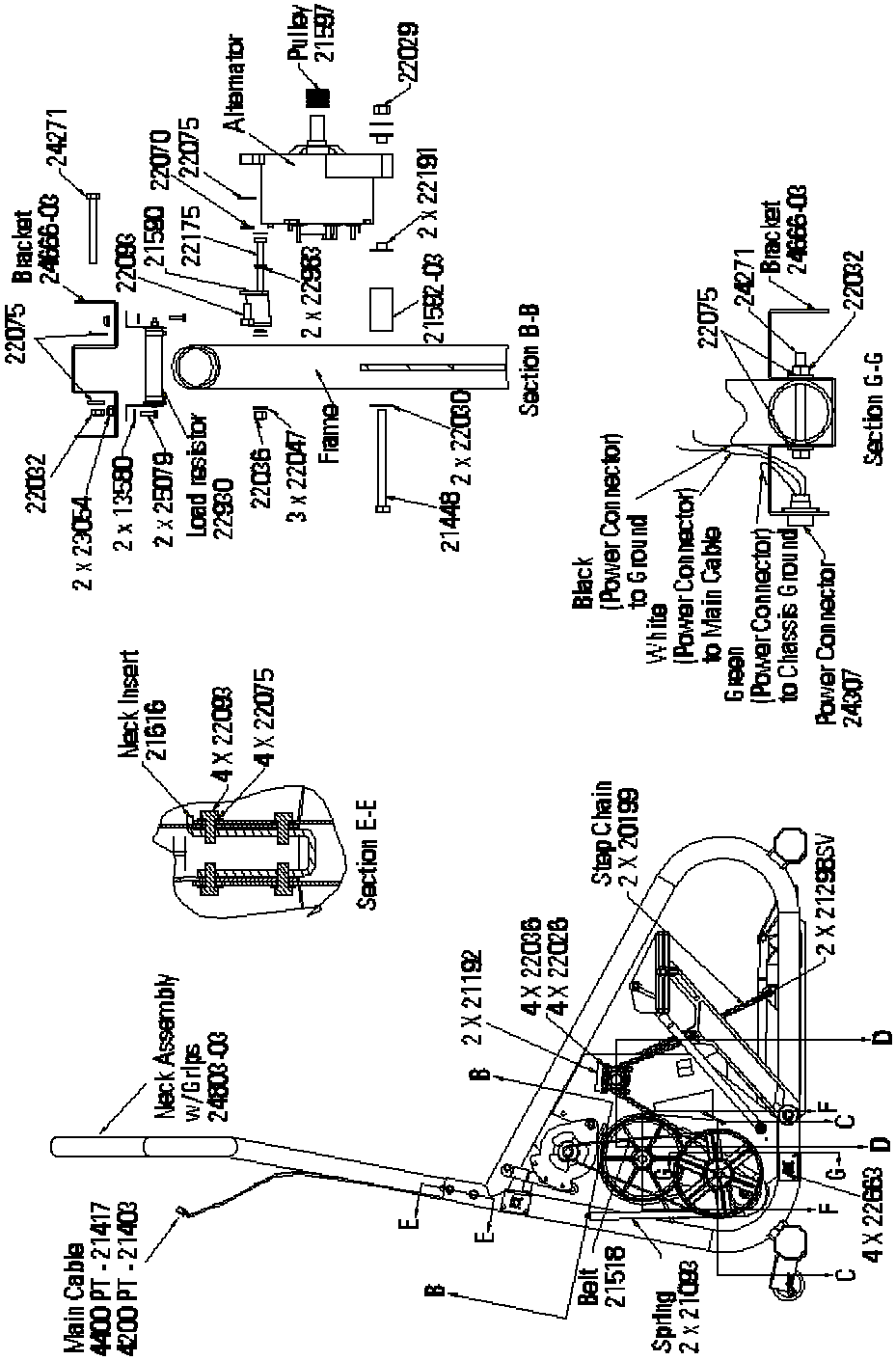

Figure 9: Final Assembly - Right, 4400/4200 PT

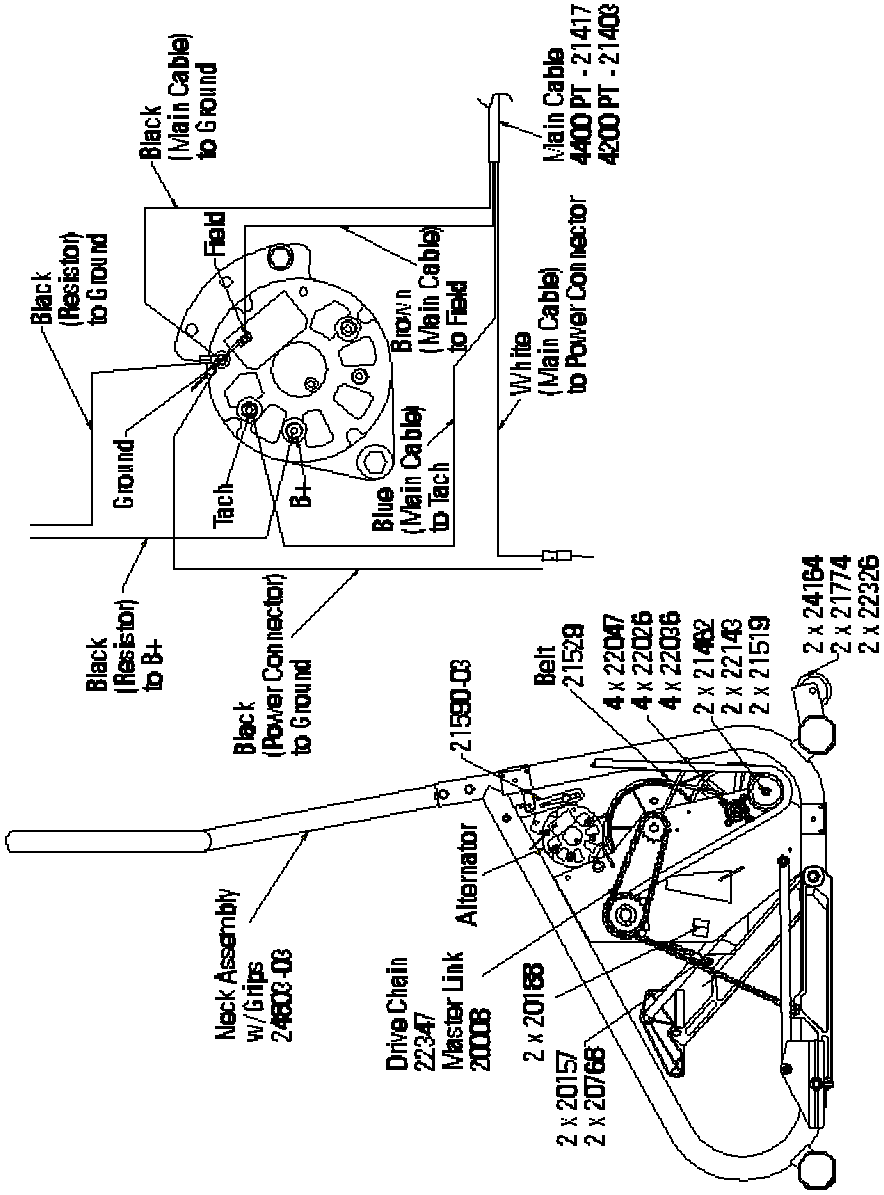

Figure10: Final Assembly - Left, 4400 CL

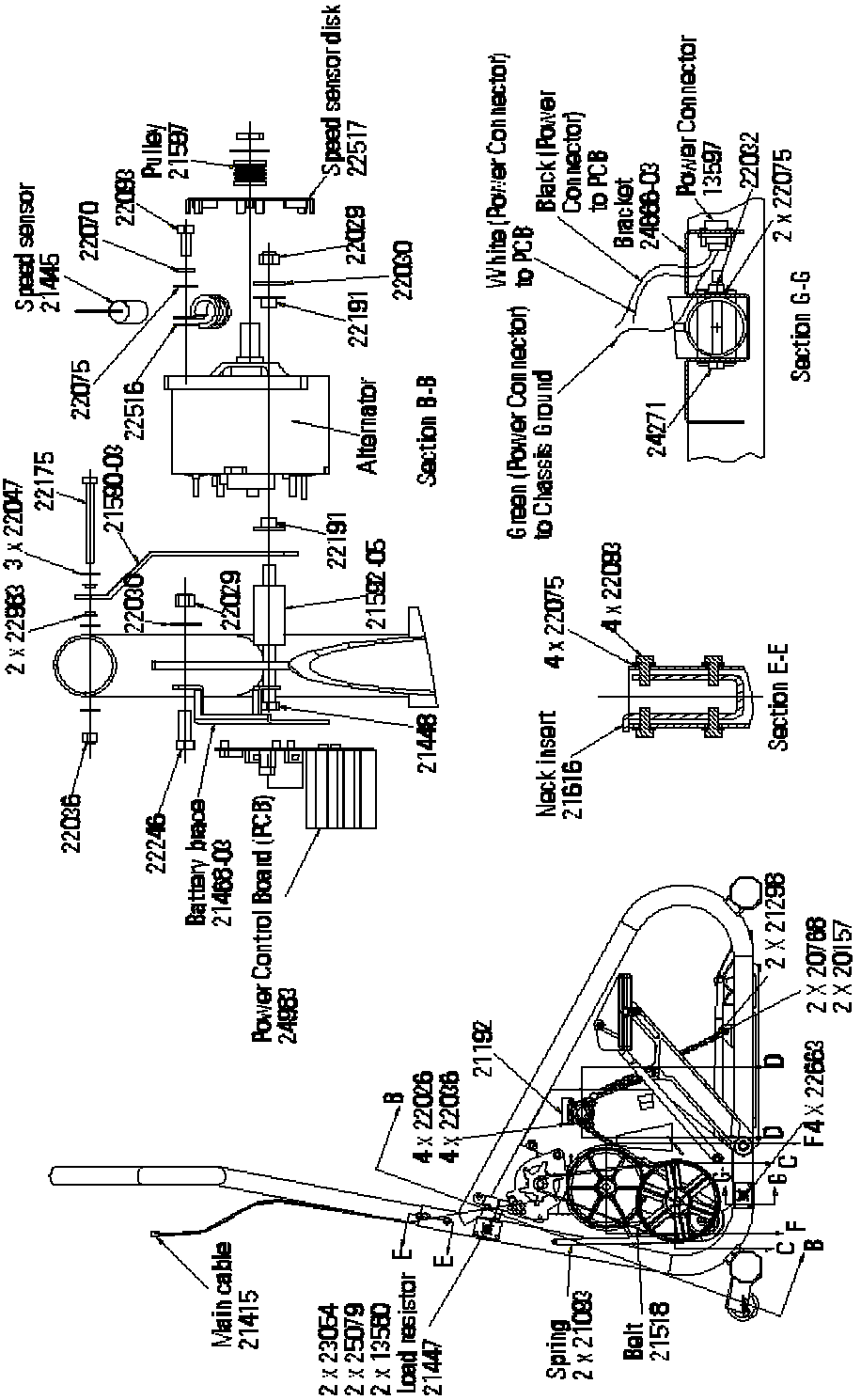

Figure 11: Final Assembly - Right, 4400 CL

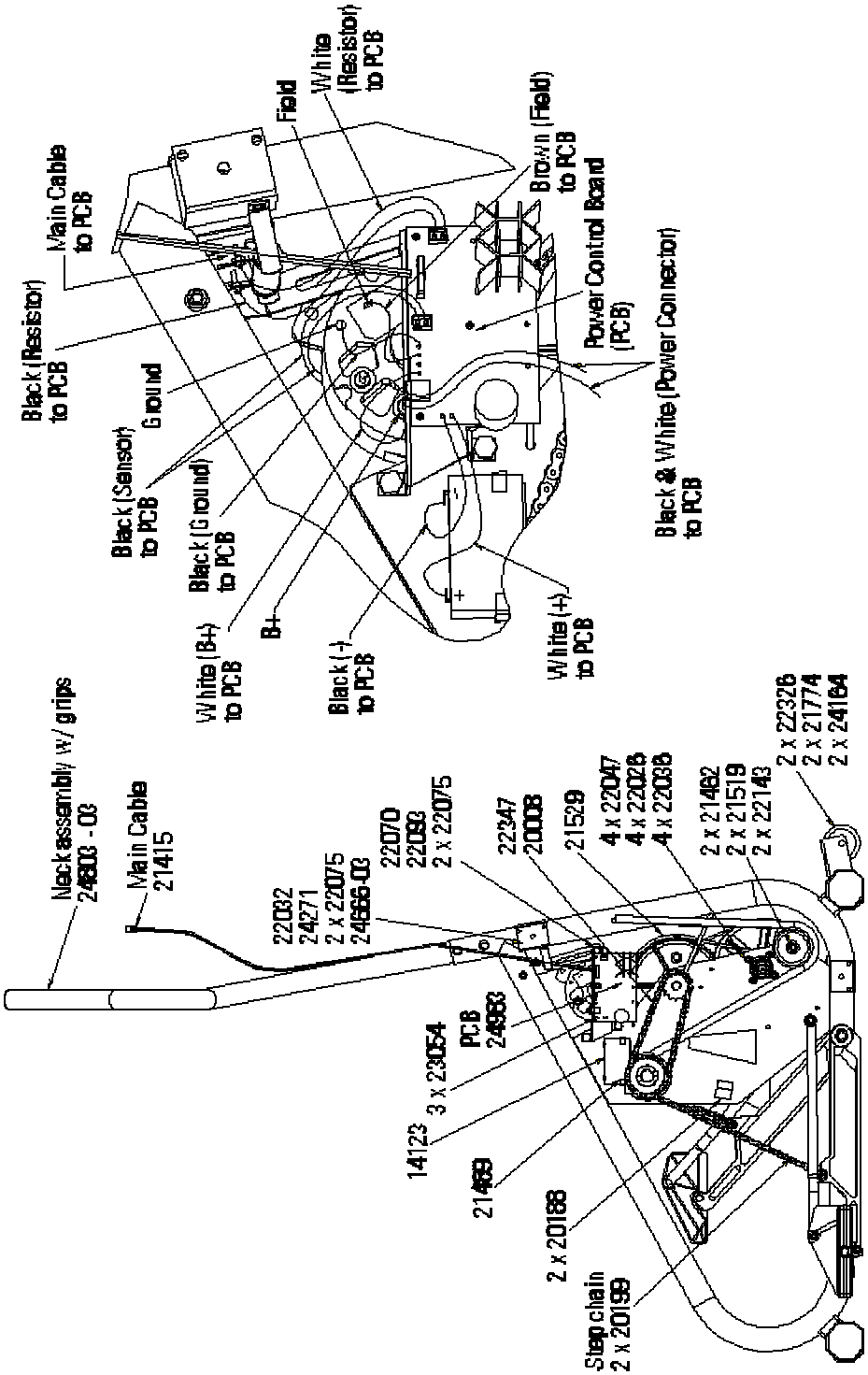

Figure 12: Covers - 4400 PT/CL, 4200 PT

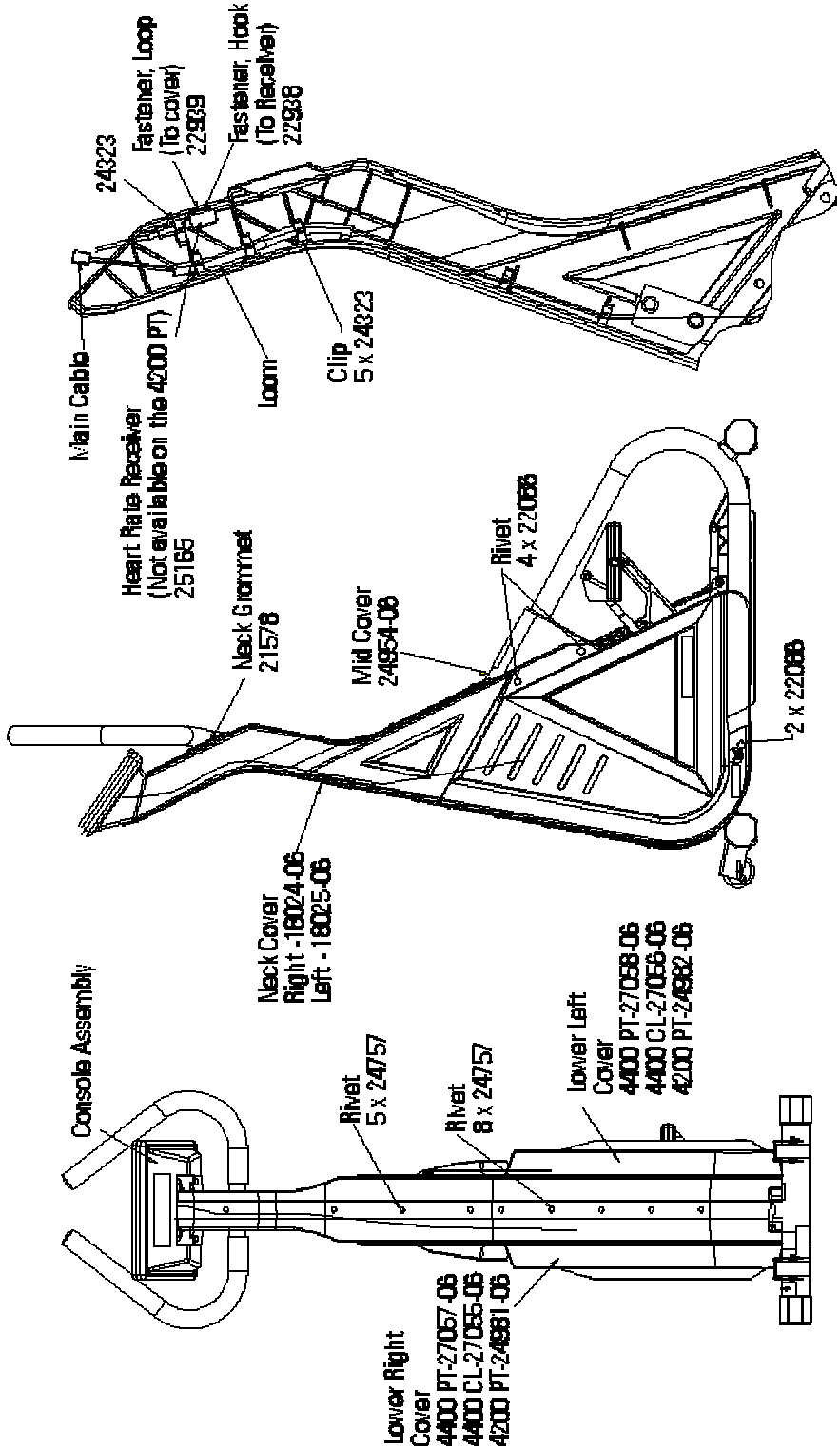

STEPPER

PEDAL ARM, PEDAL & LEVELING ARM

03-15-01

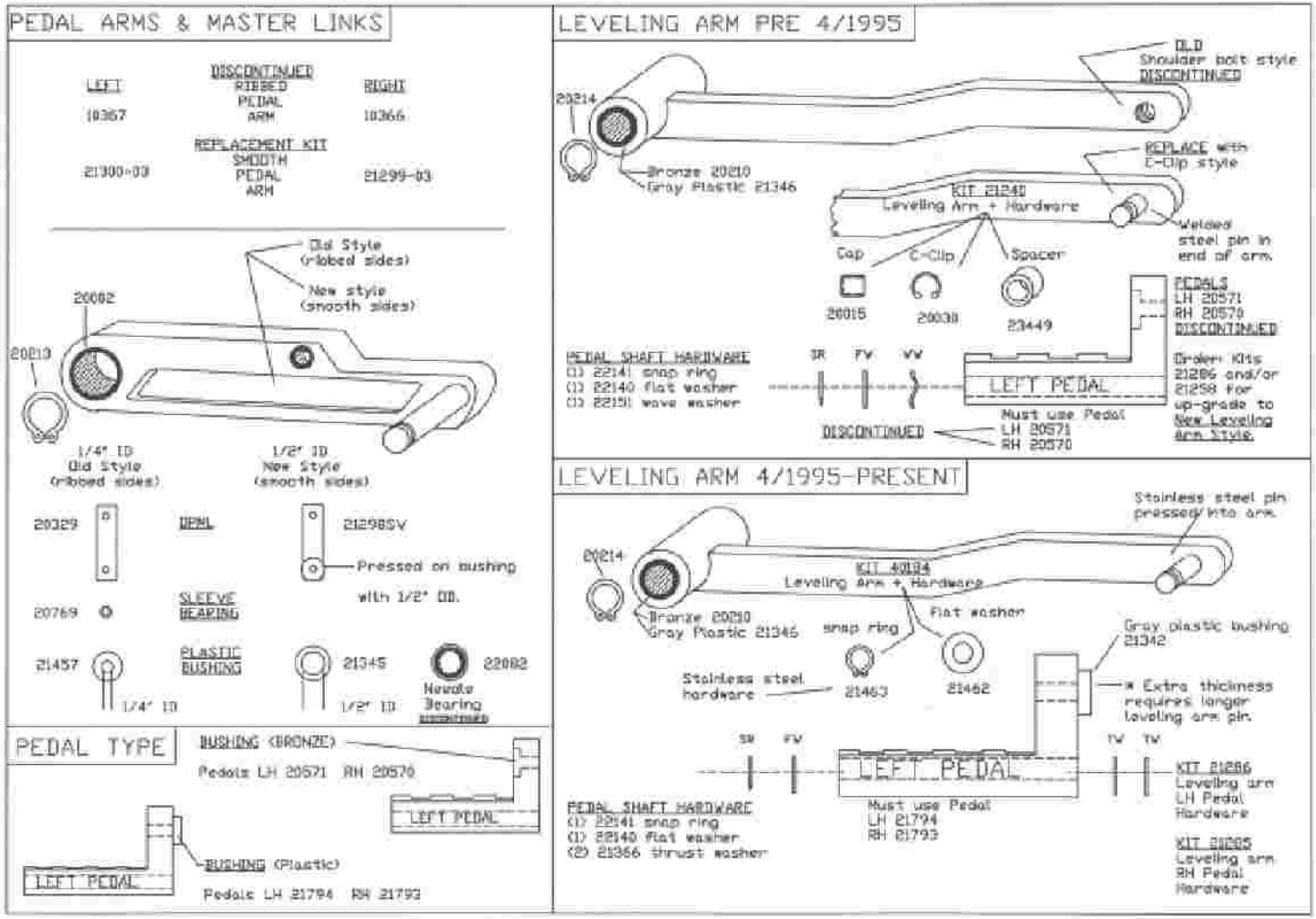

STEPMILL® 7000 PT, STEPMILL, AND GAUNTLET EXERCISE SYSTEMS

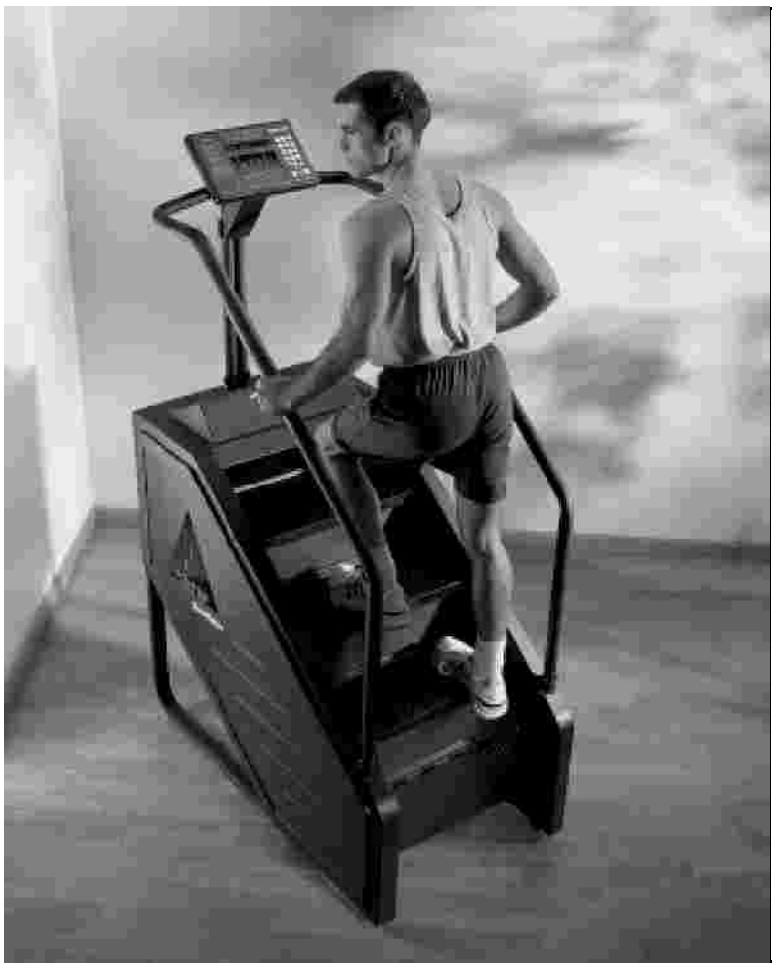

The StairMaster® Stepmill® 7000 PT, Stepmill, and Gauntlet exercise systems are vertical climbing machines with a rotating staircase which provides an aerobic workout equivalent to climbing stairs, without the impact loads and skeletal trauma common to most aerobic activities. Regular use of these machines strengthens and conditions the heart and the following lower body muscle groups: gluteals, quadriceps, hamstrings, and calf muscles.

STEPMILL® 7000 PT /STEPMILL /GAUNTLET™ ELECTRICAL TROUBLESHOOTING

Please refer to your owner's manual for detailed instructions. If you do not have an owner's manual please call our Customer Service phone number to order one.

A. Power

1. Verify AC voltage at wall outlet (110 – 120 VAC).

2. Verify AC voltage at end of AC cord (110-120 VAC -if cord detaches from power supply).

3. Verify DC voltage at power supply. You should get a minimum 12 VDC if your DC cable detaches from the power supply, and a minimum 10 VDC if your DC cable does not detach from the power supply and is prior to 10/27/97.

4. Verify VDC at end of DC cable.

5. Verify VDC on pins 4 and 5 at the end of the grey cable.

6. Verify VDC at pins 4 and 5 on relay board while someone is standing on stairs (be very careful, the use of alligator clips is imperative). Voltage under load should be between 9-12 VDC if you have an older style power supply, and no less than 12 VDC on the newer style power supply.

B. Grey Cable (does apply to the 7000 PT)

1. Perform the AC tap, alternator test, 107 enter 1 (this tests the blue wire - Pin 3). While standing on the stairs, the lower left LED should light up on the console indicating a good circuit. The alternator should provide resistance.

   Check for loose connection/bad crimp at alternator.
   OHM grey cable pin 3 to blue wire and end of grey cable, Acceptable resistance is <1.0 OHM.
   Test all other wires and crosscheck wires against all others by leaving the probe in pin 3 and testing each pin at the end of the grey cable. All tests here should give full resistance readings.

2. Perform the field terminal test, 107 enter 2 (this tests the brown wire -Pin 2).

   a. While walking on stairs, there should be no resistance. Use the speed up and slow down arrows to give full resistance/no resistance.
   b. The lower left LED should light only when machine has full resistance.

3. Check for loose connection at alternator.

4. OHM grey cable pin 2 to brown wire and end of grey cable molex. Acceptable resistance is <1.0 OHM.

5. Cross check brown wire against all others by leaving probe in pin 2 and testing each pin at end of grey cable. All tests should give full resistance readings.

6. Thoroughly test the grey cable by testing each individual wire for continuity and cross checking it against all others.

C. Relay Board - KEY -

1. Locate relay board and verify LED status.

LED #1 relay power - on when stairs rotate (Stepmill only) - always on (Gauntlet only)
LED #2 DC power - always on when power is applied
LED #3 Field status- always flashes at steady pace

D. Test point Description

Grey cable pin #1 — TP1 red
Relay signal from console (same as pin 1 of console cable).

Grey cable pin #2 — TP2 brown
Field signal from console (same as pin 2 of console cable).

Grey cable pin #3 — TP3 blue
AC tap signal to console (same as pin 3 of console cable) connected to alternator, AC tap output.

Grey cable pin #4 — TP4 white
Power (same as pin 4 of console cable).

Grey cable pin #5 — TP5 black
Ground (same as pin 5 of console cable).

Grey cable pin #6 — TP6 green
Earth ground to console (same as pin 6 of console cable) *Stepmill only.

TPA
Relay normally open contact, also connected to load resistor.

TPB
Relay normally closed contact, also connected to alternator field terminal.

TPC
Relay common contact, ground, also connected to alternator positive output terminal.

E. Relay Operation

1. When the relay is energized (LED Indicator on) TPC and TPA contacts should be shorted. If TPC and TPA do not short, relay is bad.

2. When the relay is de-energized (LED Indicator off) TPC and TPB contact should be shorted. If not, relay is bad.

F. Load Resistor

1. Turn the power off.

2. Measure resistance between TPA and TP5, resistance = .7 OHMS.

G. Relay Coil

1. Turn power off.

2. Measure resistance between TP1 and TP4, resistance – .01 - 110 OHMS.

STEPMILL®/GAUNTLET™ ELECTRONIC RELAY DIAGNOSIS

******The following tests must performed using a digital volt meter******

******All tests must be done with power off******

Verify the Relay Resistor Assembly

1. **Field circuit** - unplug the brown wire from field terminal

   • TP2 (red lead) to end of brown wire (black lead)

- This will test diode #2

- Digital Volt Meter (DVM) on diode check range should = .466

- DVM on ohms – 1.5 or less

2. **Relay Circuit** - These tests will determine whether or not the relay is shorted within itself or from B+ to normally open post (this is normal only while under console control).

- • TPA (red lead) to TPC (black lead)

  DVM on ohms = OL. This tests whether or not the load resistor is shorted to B+ when relay is normally closed (should be B+ to field).

- • TPA (red) to TPB (black)

  DVM on ohms = OL. This tests whether or not the relay poles are shorted together inside the relay

- • TPC(red) to TPB(black)

  DVM = 1 ohm or less. This tests whether or not the relay is closed (it is normally closed).

3. **Positive Output**

- • End of white wire which is positive output at alternator (red) to TPC (black)

  DVM = 1 ohm or less

- • End of white wire (red) to TPB (black) - through relay 3

  DVM = 1 ohm or less. Confirms previous tests.

4. AC Tap

- <u>• End of blue wire (red) to TP3 (black)</u>

  DVM = 1 ohm or less

- <u>TP3 (red) to J1-3 (black)</u>

  DVM = 1 ohm or less

GAUNTLET ELECTRICAL TROUBLESHOOTING

For machines with a mechanical relay

1. Check positive output to field using the following test:

   Positive output to field test on the alternator:

   Turn the power off.
   Remove the black wire from the B+ terminal on alternator.
   Remove the brown wire from the field terminal on alternator.
   Place alligator clips on the B+ terminal and the field terminal of alternator.
   Run on machine for 10-15 seconds.
   If full resistance is achieved during this time, your alternator has correct current build up from residual magnetism to field coil.

2. Test diode – Remove the diode from the alternator. Place the leads from your voltmeter on either side of the diode touching the wire. Your digital voltmeter should read 1.5 Ohms. Now reverse your leads. You should get O.L. Your analog meter should read 15 Ohms or less, and 10,000 or infinity in the other direction.

3. Test continuity on the following wires using your voltmeter set on Ohms: Disconnect the main cable from the console before testing. All tests should read < 1.0 Ohms!

   A. Disconnect the DC cable. Test between Pin #4 of the main cable connector and Pin #1 (positive) of the DC connector.

   B. Test between Pin #5 of the main cable and Pin J1-2 of the 3-pin connector at the relay box.

   C. Disconnect the blue wire from the alternator. Test between Pin #3 of the main cable and at the end of the blue wire at the alternator.

   D. Disconnect the black wire from the left side of the load resistor. Remove the white wire from the alternator. Test between the white wire and the black wire while holding the relay down. This will check continuity from the white wire through the relay to the resistor.

   E. Disconnect the brown wire from the alternator. Test between Pin #2 of the main cable and the end of the brown wire while holding the relay down.

4. Test for continuity in the main cable – Pin #2 is the brown wire, Pin #3 is blue wire, Pin#4 is the white wire, and Pin #5 is the black wire. If the main cable passes this test upgrade the mechanical relay to an electrical relay.

7000PT/Stepmill

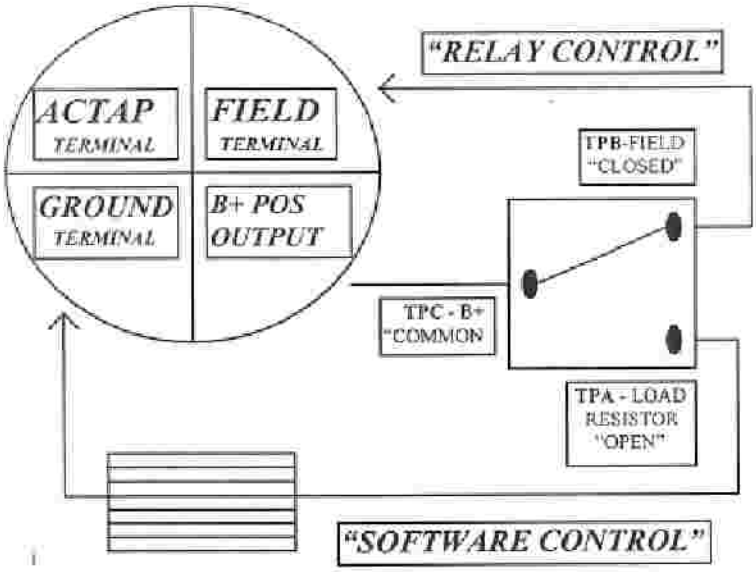

"RELAY CONTROL"

The relay is "normally closed" and will provide resistance without power by routing the current that is created from the B+ terminal back to the field terminal. This creates a loop that will provide resistance after 5-10 seconds of continuous stepping , as long as, the alternator is functioning correctly.

If the alternator is in question you should perform the Positive Output to Field test.

"SOFTWARE CONTROL"

When the relay is energized (open) the current created at the B+ terminal of the alternator will be routed to the load resistor, just like a 4000PT.

STEPMILL NOTES

RELAY CONTROL-Until program starts

7000PT NOTES

RELAY CONTROL-Only on initial start-up, during copyright scrolling message.

7000 PT/STEPMILL/GAUNTLET MECHANICAL TROUBLESHOOTING

Please refer to your owner's manual for detailed instructions. If you do not have an owner's manual please call our Customer Service phone number to order one.

1. Remove alternator belt and inspect for cracks, fraying or any other unusual or excessive wear.

2. Spin alternator pulley to check bearings.

3. Inspect alternator pulley for wear.

4. Check that the transmission pulley set screw is tightened on the flat side of the shaft (check alternator/ transmission pulley alignment).

5. Remove the drive chain and inspect it for frozen links.

6. Spin transmission drive sprocket input one complete revolution. The transmission pulley output should turn 19 times.

7. Check that the transmission drive sprocket set screw is tight.

8. Visually inspect both upper and lower sprocket assemblies including pillow block bearings for signs of unusual or excessive wear.

9. Check side to side alignment of sprocket assemblies by measuring from the outside face of each sprocket to the outside edge of the corresponding bearing rail. Measurement on sprockets should be 1 11/16" left justified.

10. Inspect step shafts and bearings in each step assembly for wear and lubricate step shafts and bearings rails as necessary (Refer to the recommended general maintenance schedule or owner's manual)

11. Inspect hinged portion of all step assemblies for wear and lubricate with 30 WT motor oil or light bearing grease.

GEAR RATIO COMPARISON OF STAIRMASTER ROTATING STAIRCASE MACHINES

7000PT (Uses Poly-V Pulleys)

- Upper Sprocket Assy-Drive teeth **42** **P/N 23424-03**
- Transmission Drive Sprocket teeth **12** **P/N 23427**
- Transmission internal ratio **18.75:1** **P/N 20001**
- Transmission Pulley diameter **3.0** **P/N 24662**
- Alternator Pulley diameter **1.5** **P/N 21247**

*Ratio Calculation (42/12)*18.75*(3.0/1.5) = **131.25 RPM***

- Drive Chain **P/N 23257**
- Alternator Belt **P/N 20202**
- Step Chain **P/N 10195**

Stepmill (Uses HTD Pulleys)

- Upper Sprocket Assy-Drive teeth **42** **P/N 23424-03**
- Transmission Drive Sprocket teeth **12** **P/N 23427**
- Transmission internal ratio **18.75:1** **P/N 20001**
- Transmission Pulley diameter **22** **P/N 20208**
- Alternator Pulley diameter **18** **P/N 21157**

*Ratio Calculation (42/12)*18.75*(22/18) = **80.208 RPM***

- Drive Chain **P/N 23257**
- Alternator Belt **P/N 20215**
- Step Chain **P/N 10195**

Gauntlet (Uses HTD Pulleys)

- Upper Sprocket Assy-Drive teeth **30** **P/N 10200**
- Transmission Drive Sprocket teeth **14** **P/N 20159**
- Transmission internal ratio **18.75:1** **P/N 20001**
- Transmission Pulley diameter **36** **P/N 20786 (EOL)**
- Alternator Pulley diameter **18** **P/N 21157**

Ratio Calculation (30/14)*18.75*(36/18) = **80.357 RPM**

- Drive Chain **P/N 20104 (EOL)**
- Alternator Belt **P/N 20647 (EOL)**
- Step Chain **P/N 10195**

BISON TRANSMISSION

01-03-01

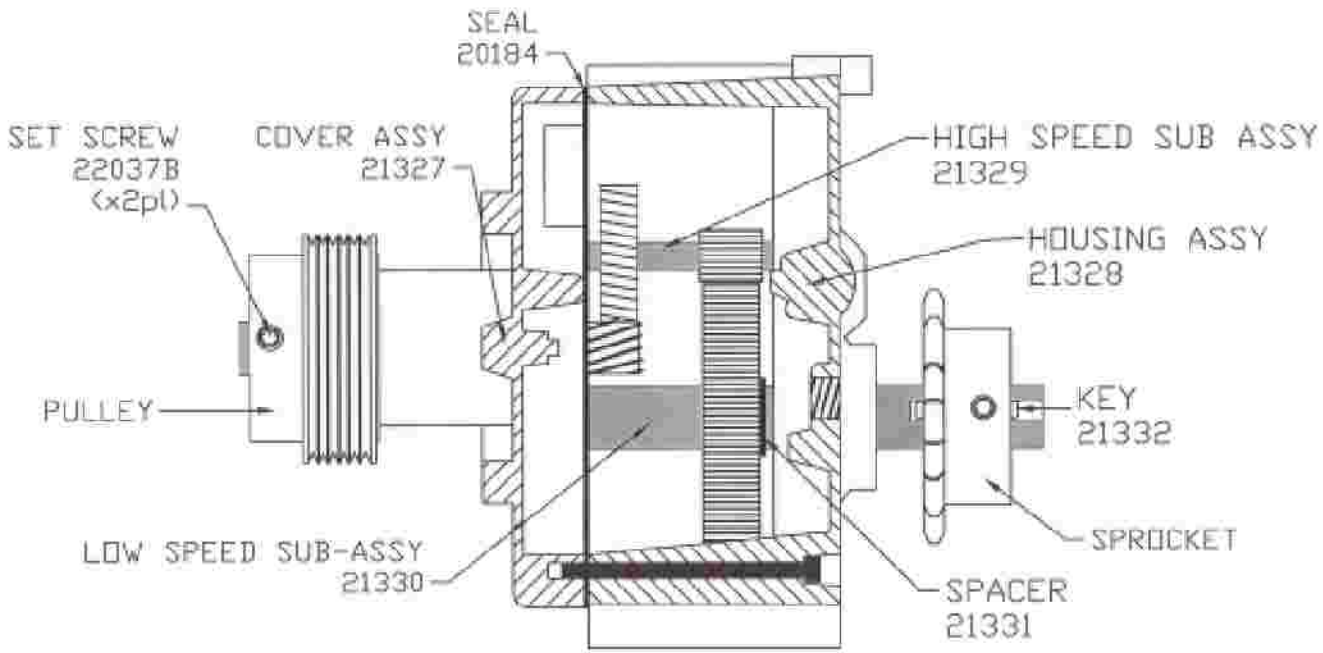

	6000	GAUNTLET	STEPMILL	7000PT
	PART#	PART#	PART#	PART#
Transmission Only	20001	20001	20001	20001
Drive Sprocket	20159	20159	23427	23427
HTD Pulley	NA	20786	23591	NA
Poly-V Pulley	NA	NA	NA	22434

COMPLETE TRANSMISSION ASSEMBLIES		PART#
6000	W/Sprocket (NO PULLEY)	10098
GAUNTLET	W/Sprocket (NO PULLEY)	10906
STEPMILL	W/HTD Pulley & Sprocket	10408
7000PT	W/Poly-V Pulley & Sprocket	22434

7000 PT/STEPMILL /GAUNTLET MAINTENANCE SCHEDULE

This is a quick guide to preventive maintenance for the 7000 PT, Stepmill, and Gauntlet Exercise System. Please refer to the owner's manual that is provided with each machine for complete service, repair, and operating instructions.

PART	RECCOMENDED ACTION	FREQUENCY	CLEANER	LUBRICANT
Exterior Surfaces	Clean	Daily	Soap & water	N/A
Console	Wipe Clean	Daily	Water	N/A
Step Chain Assembly	Lubricate	Monthly or after 300 hours of use	N/A	30W motor oil
	Clean and lubricate	Quarterly or after 900 hours of use	Clean, dry rag	Multi purpose grease
Drive Chain	Lubricate	Weekly or after 70hours of use	N/A	30W motor oil
	Clean and lubricate	Quarterly or after 900 hours of use	Mild Degreaser	30W motor oil
Step Hinges	Lubricate	Monthly or after 300 hours of use	N/A	30W motor oil
Bearing Plate	Clean and lubricate	Quarterly or after 900 hours of use	Mild Degreaser	30W motor oil

Note: Use of lubricants other than those specified will result in diminished performance and a shorter life span for that part.

Figure 13: Parts Needing Periodic Lubrication

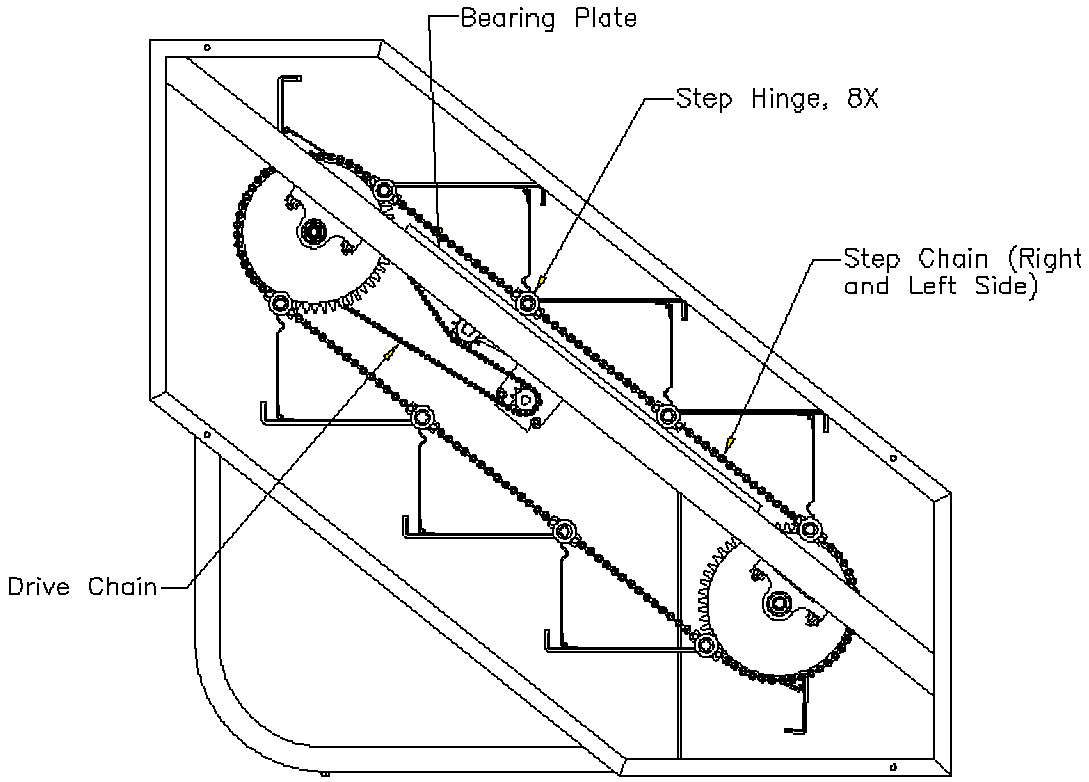

Figure 14: Side Cover and Handrail Assemblies

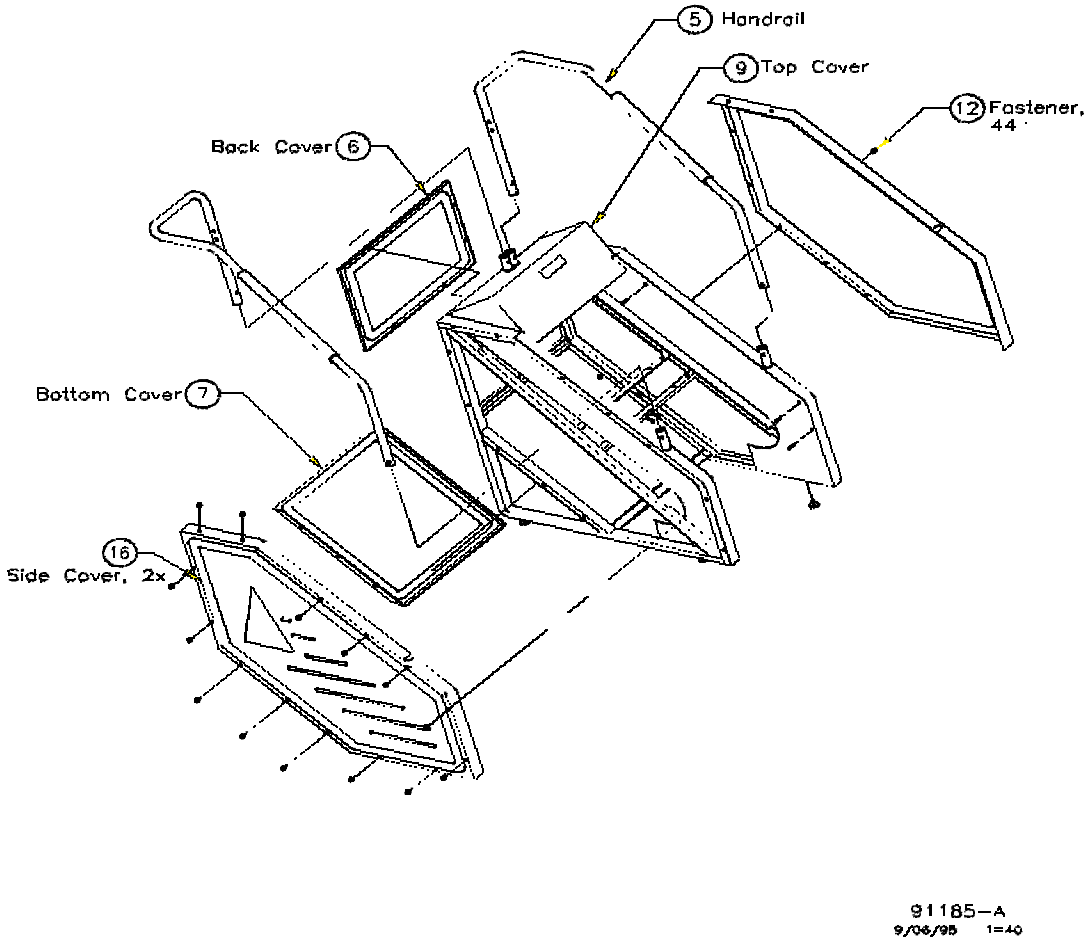

Figure 15: Poly-V Belt Tension

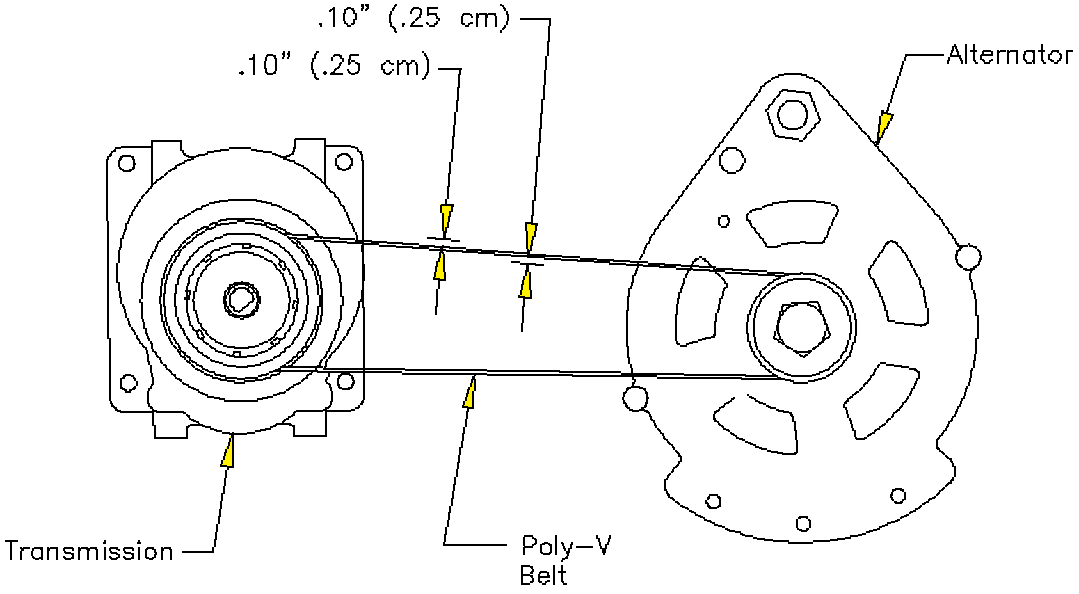

Figure 16: Drive Chain Assembly

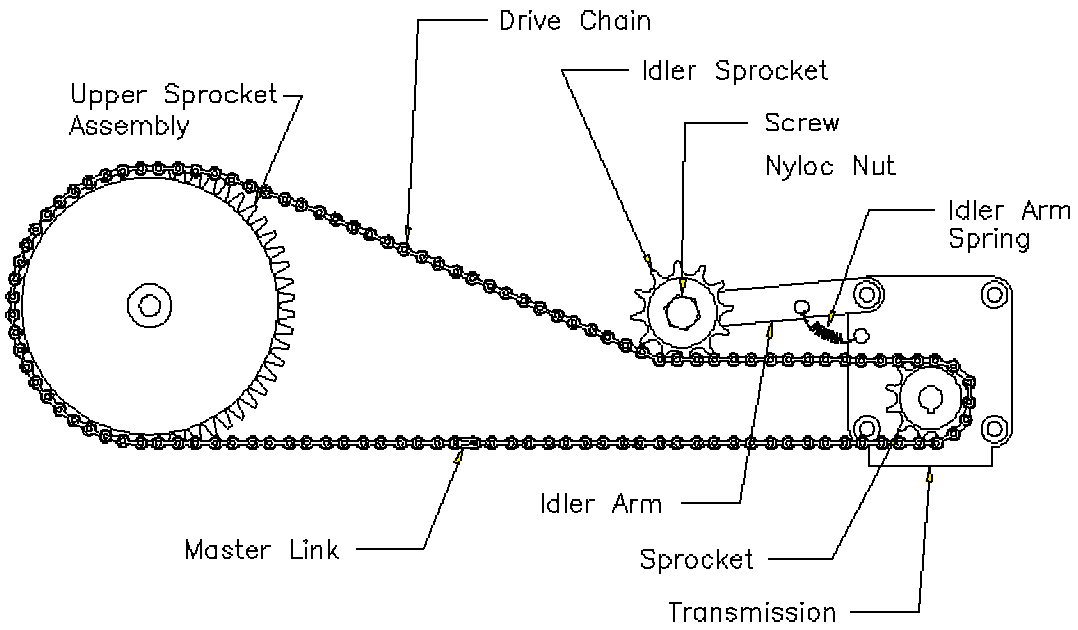

Figure 17: Step Assembly

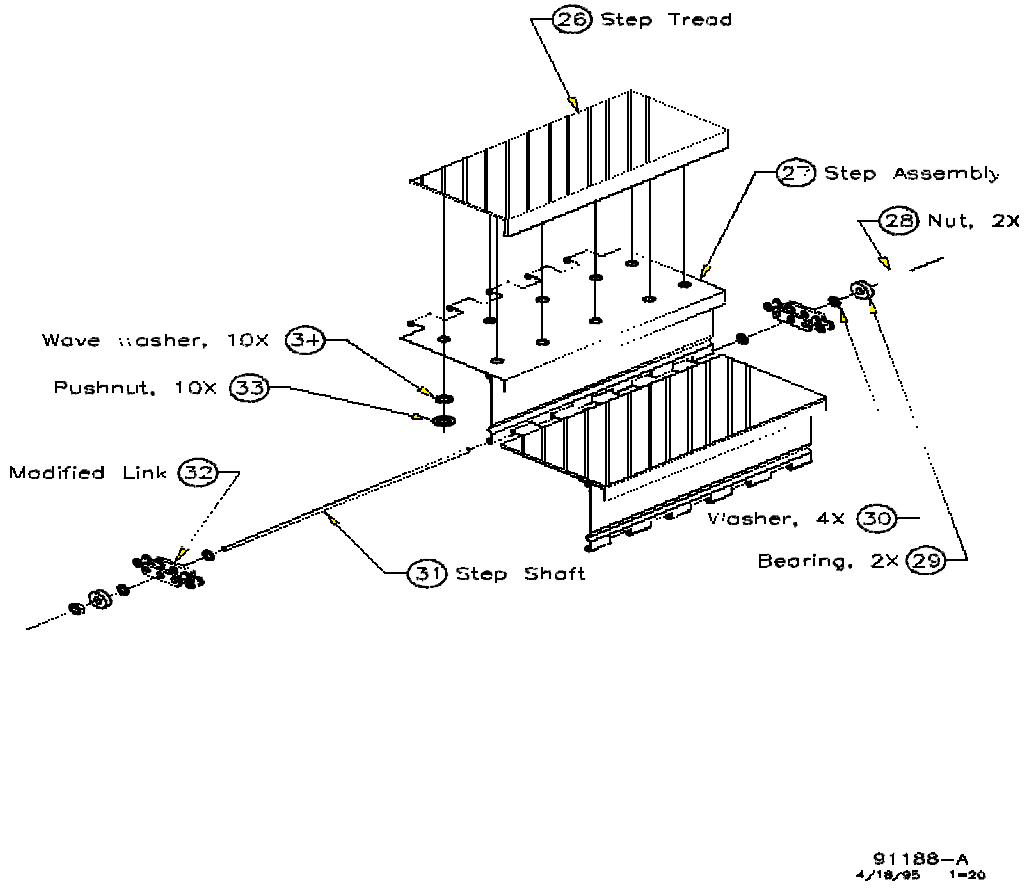

Figure 18: Step Chain and Sprocket Assemblies

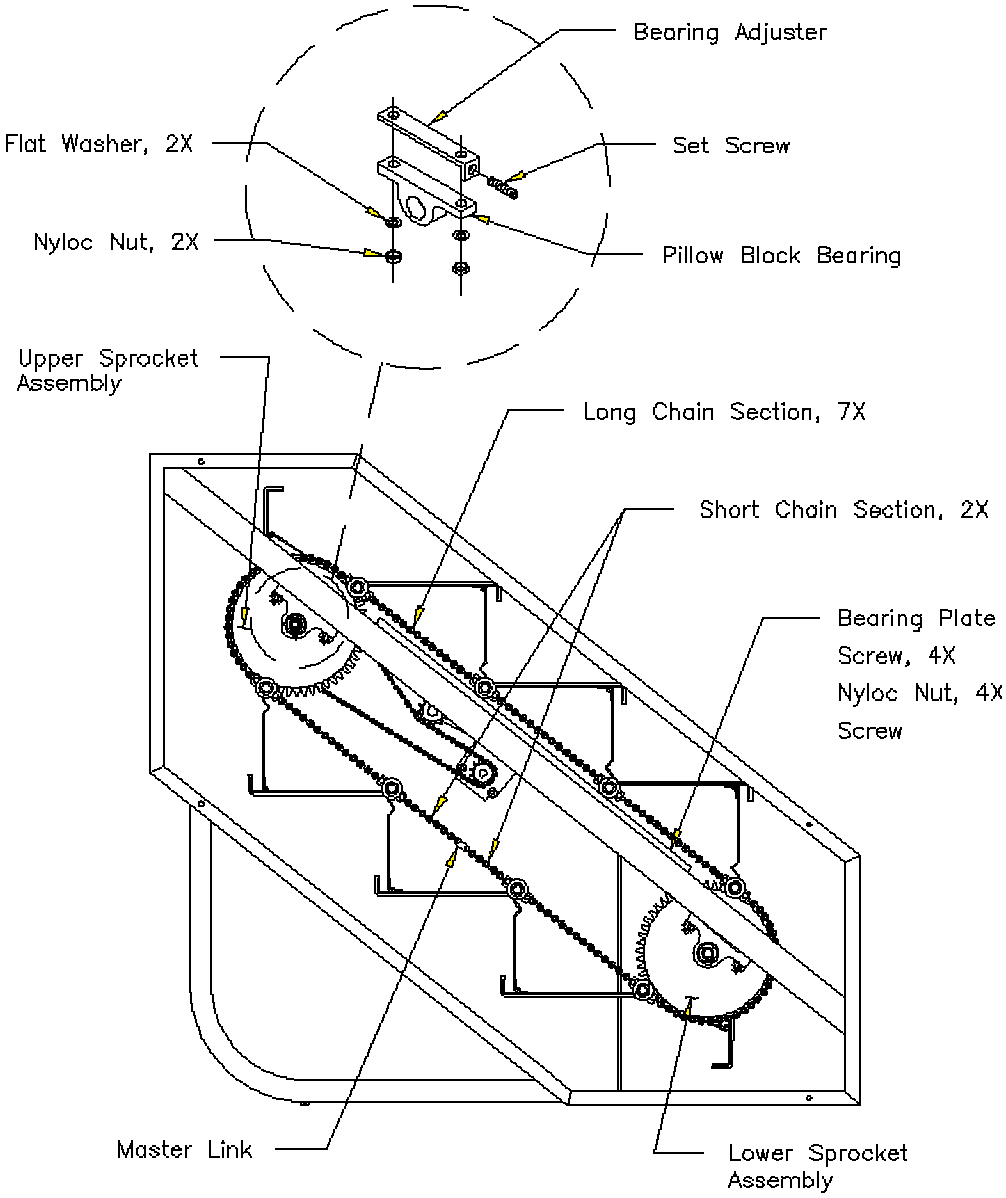

Figure 19: Transmission and Alternator Assemblies

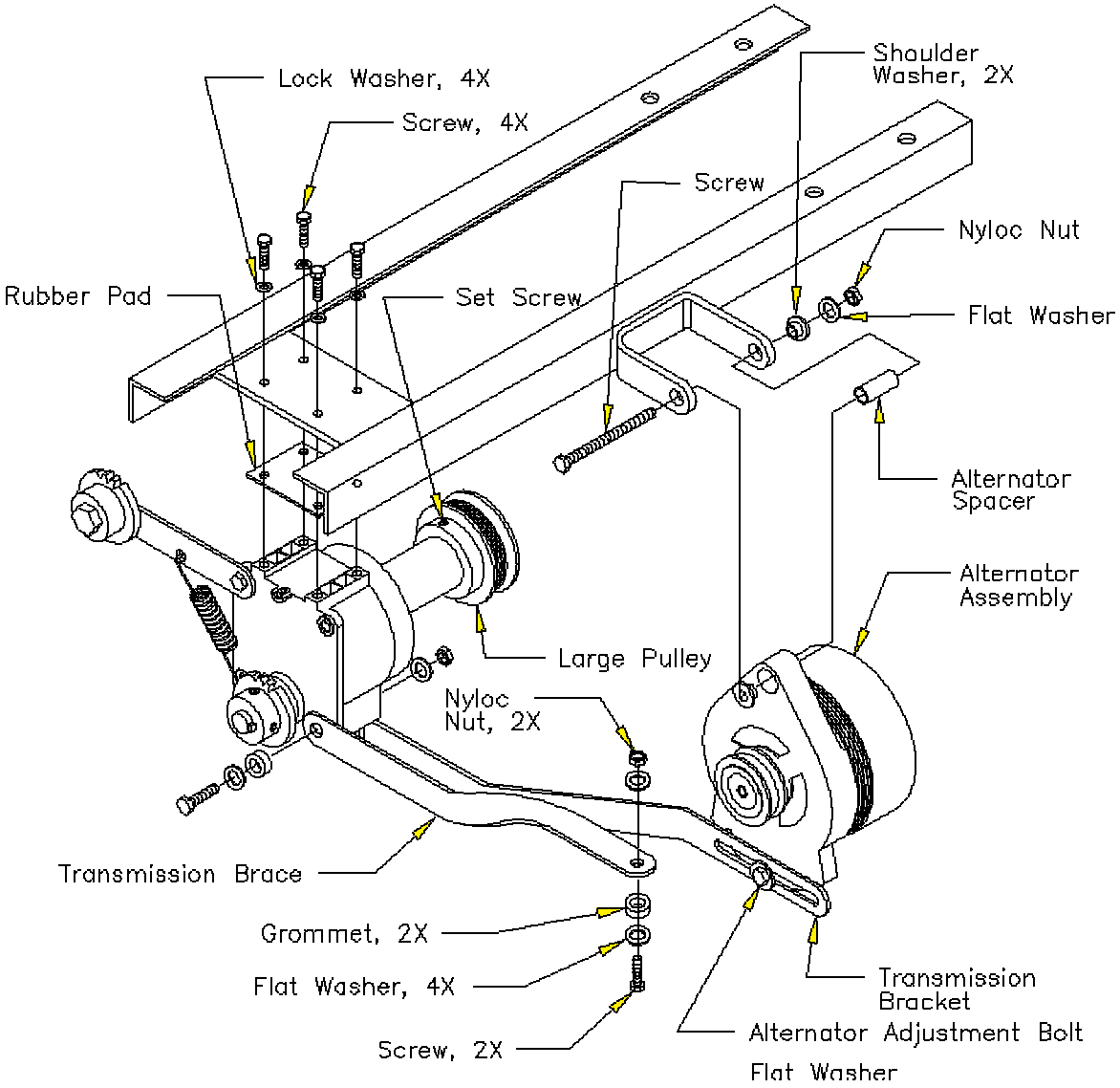

Figure 20: Wiring Diagram 1

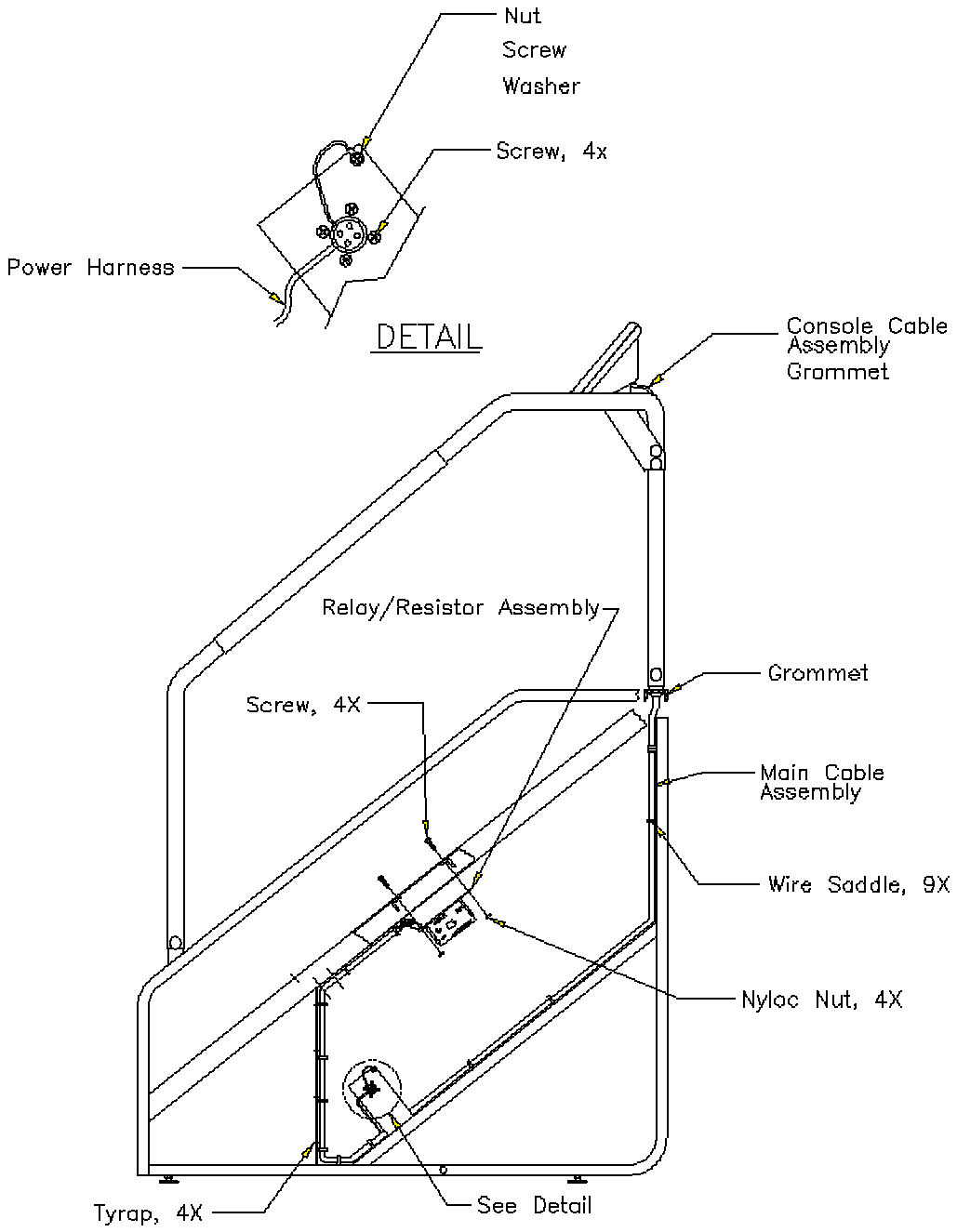

Figure 21: Wiring Diagram 2

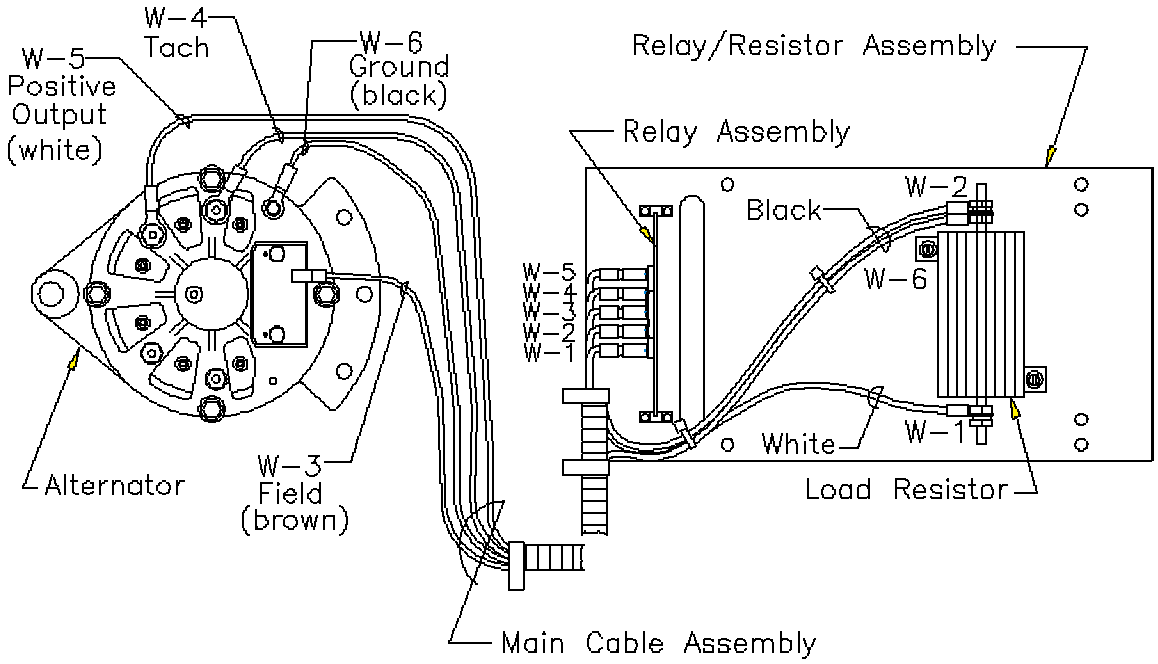

Figure 22: Wiring Diagram 3

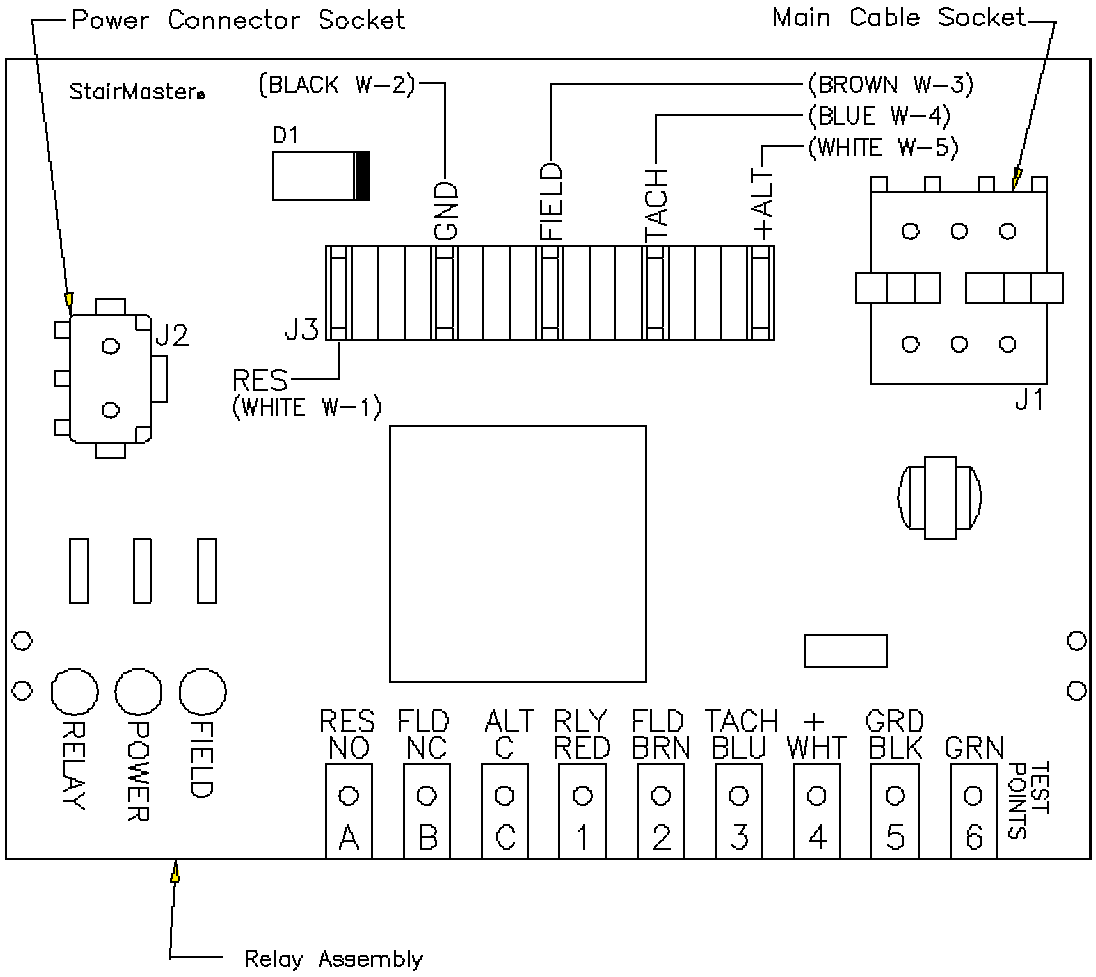

INDIVIDUAL PARTS DESCRIPTION

1. Console

A. The unit displays workout information with a bar graph that shows the difficulty level selected and display windows which indicate the number of repetitions completed, elapsed time, the weight of the individual (while inputting workout information at the beginning of the program), and the weight being lifted (while the program is in process).

B. The console is used to perform several tests. These are the display test, leak test, and safety valve test.

C. The console also serves as a signaling device to various electrical components when the machine is turned on (pressurized) or when the machine is turned off (depressurized).

2. Power Module

A. Supplies 110 volts AC power to the air compressor and solenoid.

B. Converts 110 volts AC to 12 volts DC minimum for the console.

C. Converts 110 volts AC to 5 volts DC for the transducer.

3. GFI Cord

Contains a safety mechanism which, in the event of AC voltage spikes, failure of an electronic component, or deviation from the correct voltage trips the reset on the yellow Ground Fault Interrupter (GFI) cord, and disables the machine.

4. One Way Check Valve

Allows air to pass from the compressor into the accumulator tank only.

5. Safety Valve

A. Prevents the platform from rising rapidly should someone inadvertently step off the machine without using the on/off button.

B. Regulates the pace of the workout by limiting the airflow between the accumulator tank and the air cylinder.

6. Transducer

Pressure sensor that reads the air pressure in the accumulator tank and sends a signal through the power module to the console.

7. <u>Solenoid</u>

Release valve that opens at completion of a program and expels air and moisture from the accumulator tank. The valve is normally closed.

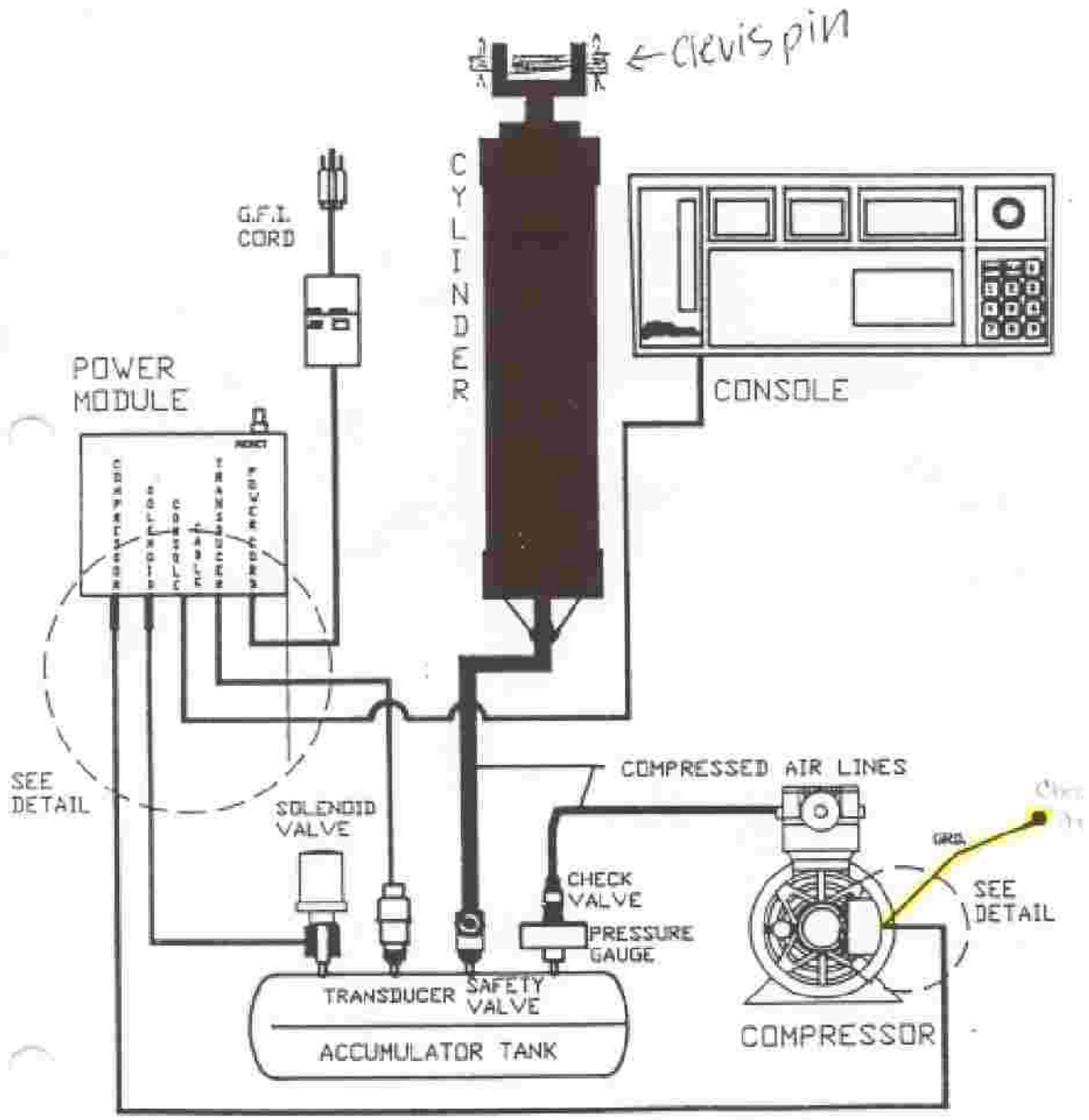

GRAVITRON® 8000 TROUBLESHOOTING

LEAK TEST

1. Press 2020, Enter, Enter to engage compressor.
2. Let compressor run until the number in the workout weight window reaches 100.
3. Press Enter to stop compressor.
4. Wait 3 minutes and record number from workout weight window.

* This test should be performed once while standing on the platform and once off the platform. This will test both the upper and lower seals inside the cylinder.

CALIBRATION - WITH PRESSURE GAUGE

1. Press 2020, Enter, Enter, to engage compressor.
2. Let compressor run until pressure gauge reaches 75 PSI.
3. Press Enter to stop compressor.
4. Record number in workout weight window.
5. If number recorded is 128, then machine is properly calibrated. End test.
6. To calibrate machine, use gain adjustment screw on the power module to raise or lower number in workout weight window as needed.
7. Run test again to double check adjustment accuracy.

CALIBRATION - WITHOUT PRESSURE GAUGE

1. Place exactly 100 lb. (dumbbells, weight plates, etc.) on platform.
2. Program a workout for a 200-lb. person at level 9.
3. After compressor turns off, lift the platform assembly up to full extension.
4. Slowly lower platform assembly until it stops on its own.
5. The platform should stop half way between the floor and full extension to be adjusted correctly. The lift beam assembly should be parallel with the floor.
6. YOU MUST RESET the workout and program another in order to calibrate correctly. Use the gain adjustment screw on the power module to calibrate.

SAFETY VALVE ADJUSTMENT

1. Program a workout while standing on the lift platform.
2. After compressor stops, step off platform quickly.
3. Platform should rise 8-12 inches and stop if set correctly.
4. If platform rises less than 8 inches, the adjustment screw on the safety valve should be turned counter clockwise 1/8 turn for each 2 inches added.
5. If platform rises more than 12 inches, the adjustment screw on the safety valve should be turned clockwise 1/8 turn for every 2 inches subtracted.
6. If platform stops only at full extension, turn the adjustment screw clockwise 1 complete turn and retest.
7. If platform will not rise off the floor, turn the adjustment screw counter clockwise 1 turn at a time.

SYMPTOM: COMPRESSOR RUNS ALL THE TIME

1. Unplug GFI cord from wall.
2. Unplug grey cable from console.
3. Plug in GFI cord.
4. If compressor has stopped, the console is bad.
5. Unplug GFI cord.
6. Unplug grey cable from power module.
7. Plug in GFI cord.
8. If compressor has stopped, grey cable is bad.
9. If compressor is still running then power module is bad.

SYMPTOM: SOLENOID WILL NOT CLICK WHEN ON/OFF BUTTON IS PRESSED

1. Verify voltage at solenoid AC plug port on power module at 115-125 VAC when on/off button is pressed.
2. If you do not have a voltmeter, switch the compressor and solenoid AC plugs at the power module. If voltage is good, the compressor should run briefly.
3. If voltage is not present, replace power module.
4. If voltage is present, replace solenoid.

SYMPTOM: PROGRAM GETS HARDER DURING WORKOUT (SLOW LEAK)

1. Perform leak test on and off platform.
2. Use soapy water solution to spray over all components including solenoid, compressor, hoses, top of cylinder, etc.
3. If leak is still not found, remove and disassemble safety valve and clean all components with rubbing alcohol.
4. Test again to check progress.
5. If problem still exists, remove and disassemble the one way check valve and clean with rubbing alcohol.
6. Test again to check progress.

SYMPTOM: NO LIGHTS ON CONSOLE

1. Press 015 Enter to perform display test.
2. Unplug grey cable from back of console.
3. Test for 18-20 VDC at pins 4 and 5 on grey cable.
4. If voltage is good, replace console.
5. Unplug grey cable from power module.
6. Test for 18-20 VDC at pins 4 and 5 on power module.
7. If voltage is good, replace grey cable.
8. If voltage is bad, replace power module.

SYMPTOM: NUMBERS IN WORKOUT WEIGHT WINDOW WILL NOT RISE WHEN PRESSURE RISES ON PSI GAUGE DURING WORKOUT OR 2020 TEST

1. Verify power is on.
2. Unplug transducer from power module.
3. Test for 5 VDC on pins 1 and 2 at power module.
4. If voltage is good, replace transducer.
5. If voltage is bad, replace power module.

SYMPTOM: MACHINE WOBBLES AND IS UNSTABLE DURING USE

1. Machine needs to be leveled with the leveling adjustment on back of machine.

SYMPTOM: SAFETY VALVE DOES NOT CATCH PLATFORM ABOVE LEVEL 12 OR SO

1. This is normal; there is not enough platform speed to engage safety valve at some higher levels. Condition should still be safe due to slow platform speeds.

SYMPTOM: MACHINE WILL NOT ACCEPT "CLEAR" FOR PYRAMIDING DURING WORKOUT

(See page 4 of owner's manual for pyramiding instruction.)
1. This system has a leak that must be repaired.
2. Possible bad keypad in console.

SYMPTOM: WHEN PROGRAMMED FOR HIGHER LEVELS THE PLATFORM WILL NOT RISE AFTER COMPRESSOR SHUTS OFF

1. Is user programming correct weight?
2. Power module not "zero" adjusted. Perform calibration proceedure.
3. Machine probably has a 1.2 chip in it. If so, replace with a 1.4 chip. To determine which chip is in console, press 107 Enter.
4. Possible faulty power module.

SYMPTOM: PLATFORM CATCHES PROPERLY AT 8"-12" ON SAFETY VALVE TEST (SEE PAGE 3 OF OWNER'S MANUAL) BUT CUSTOMER COMPLAINS ABOUT IT CATCHING DURING WORKOUT

1. Users working out too fast, educate user on correct workout pace and reasons why. If necessary to minimize complaints, adjust platform to catch between 8"-12", if this can be done without causing a safety hazard.

SYMPTOM: UNIT LEAKS AIR SOMETIMES, BUT WORKS FINE OTHER TIMES

1. Possibly a solenoid valve not always closing.
2. Possibly a check valve not always closing.

SYMPTOM: COMPRESSOR SHUTS OFF BEFORE REACHING PROGRAMMED LEVEL

1. Possible air leak. Console will shut off compressor if the accumulator pressure does not drop off the top bar graph light in 20 seconds. Console will light up again after another 10 seconds. Compressor s hould reach 40 PSI in 18 seconds. Watch pressure gauge and time compressor. If it does not reach this level, the compressor will shut itself off.

SYMPTOM: FREQUENT LEAKS BETWEEN COMPRESSOR AND CHECK VALVE

1. Mechanical lift is hitting a hose during operation, usually at or near floor level.

SYMPTOM: CYLINDER HAS NO TOP OR BOTTOM CUSHION

1. Cylinder has a bad internal check valve, replace cylinder.

SYMPTOM: PLATFORM STICKS IN THE MIDDLE OF LEVELS 1 OR 2

1. Is user inputting his weight correctly? Are other people having the same problem?
2. Possibly too much mechanical friction. Lubricate oilite bushings with 30W oil.

SYMPTOM: AT THE END OF WORKOUT OR WHEN MACHINE IS POWERED UP, CONSOLE FLASHES ZEROS 4 TIMES

1. Power module is too far out of zero, adjust power module. Perform calibration proceedure.

SYMPTOM: COMPRESSOR WILL NOT RUN AT ALL

1. Plug compressor directly into a 110 VAC wall outlet. If it doesn't work, replace compressor.
2. If compressor does work when plugged into a 110 VAC wall outlet, unplug the compressor and the solenoid from the power module. Next, plug the compressor into the solenoid receptacle on the power module. If the compressor works, replace the power module.

SYMPTOM: SOLENOID VALVE STAYS OPEN ALL THE TIME

1. Unplug valve from power module and check if the machine will pressurize. If machine does not pressurize when valve is unplugged, replace it.

SYMPTOM: MACHINE MAKES SQUEAKING NOISES

1. Lubricate oilite bushings with 30W oil.

SYMPTOM: DURING EXERCISE, BOTTOM LEVEL OF PLATFORM TOO HIGH OR TOO LOW

1. Adjust safety valve.
2. If safety valve is adjusted properly, replace cylinder.

ELECTRICAL DETAIL

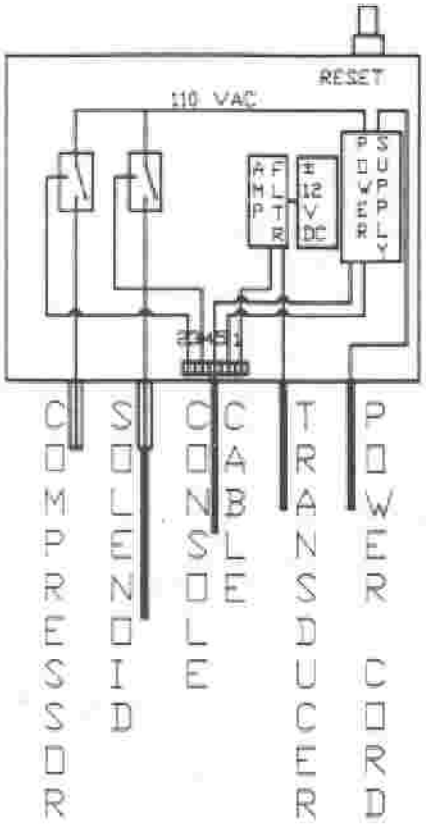

CONSOLE

PIN#	WIRE COLOR		VOLTAGE	
1	BLUE	TRANSDUCER	0-5	VDC
2	ORANGE	COMPRESSOR	5	VDC
3	YELLOW	SOLENOID	5	VDC
4	BLACK	GROUND	0	VDC
5	WHITE	POWER	+15	VDC
6		NA	NA	
7		NA	NA	
8		NA	NA	

TRANSDUCER (X DUCER)

PIN#	WIRE COLOR			VOLTAGE	
1	BLACK	GROUND		0	VDC
2	RED	POWER		+5	VDC
3	WHITE	X DUCER	+	0-2	VDC
4	GREEN	X DUCER	-	0-2	VDC

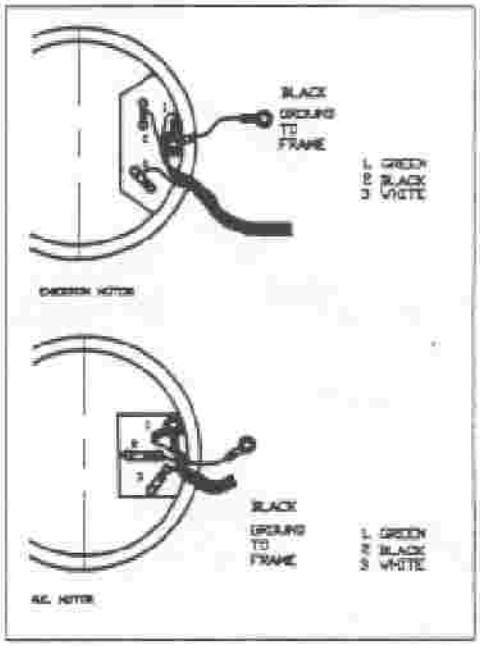

COMPRESSOR WIRING DIAGRAM

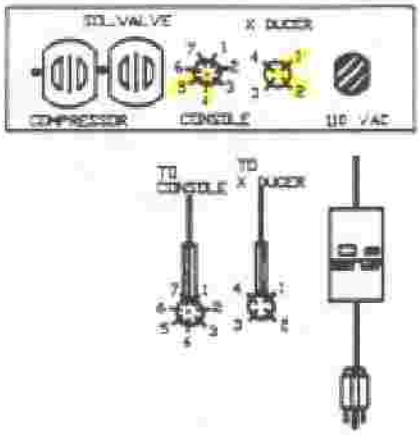

POWER MODULE DETAIL

SAFETY VALVE

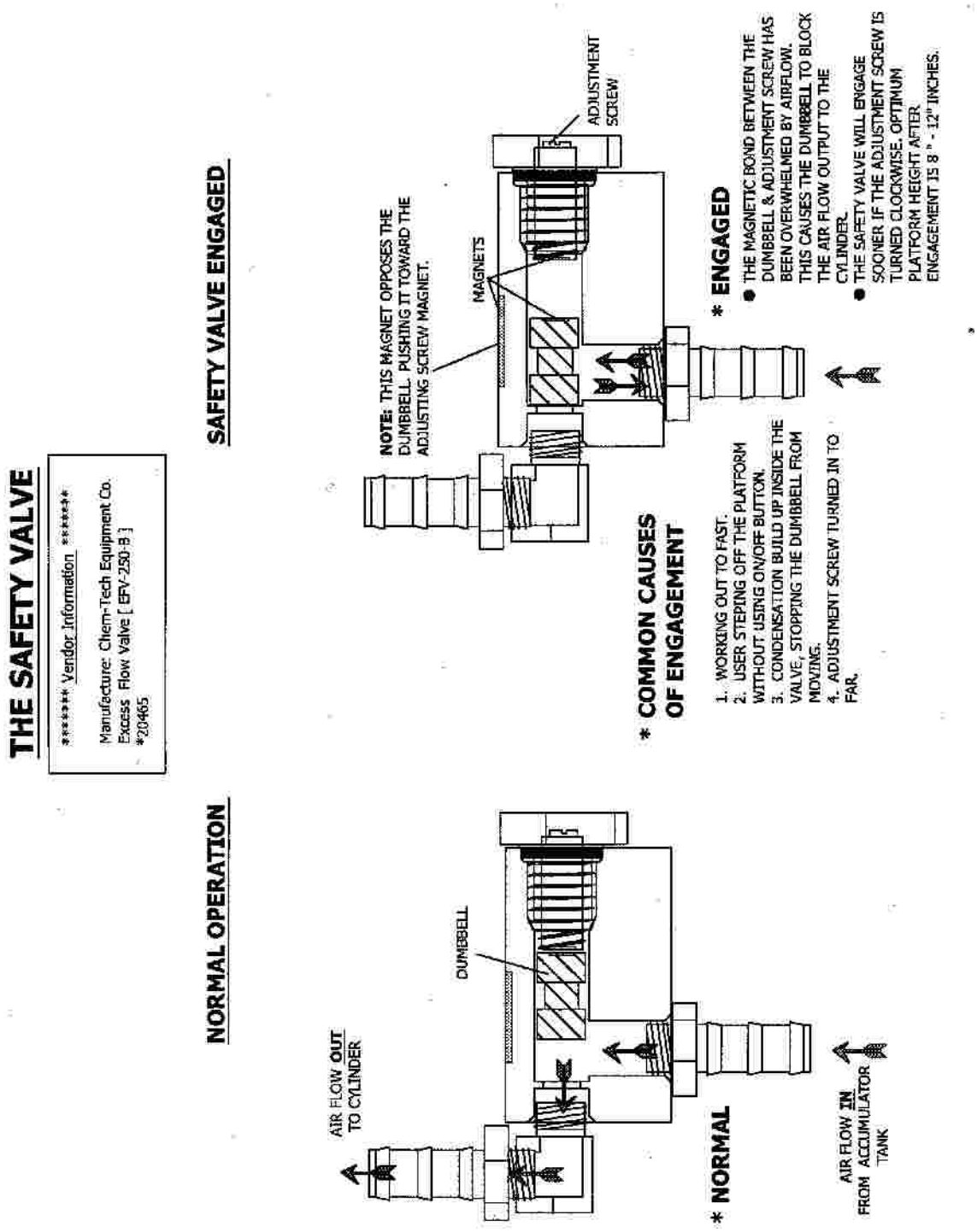

THE CROSSROBICS® EXERCISE SYSTEMS

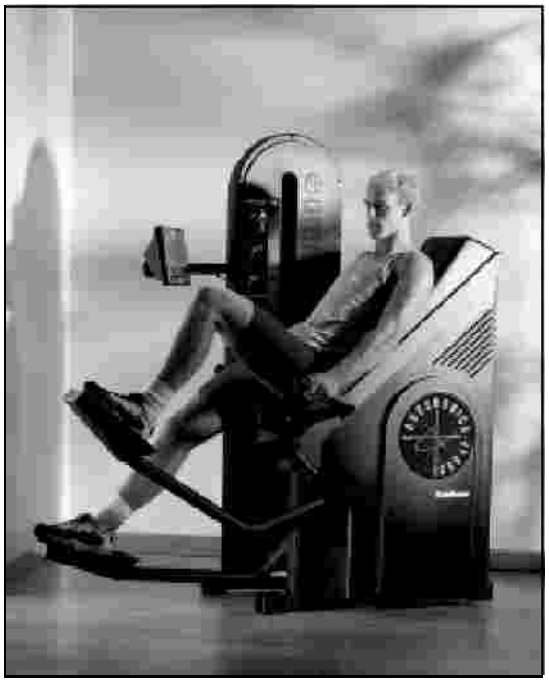

1650 LE

The Crossrobics 1650 LE conditioning system is a non weight-bearing, weight-loading, exercise system. Regular use produces increased aerobic capacity as well as stronger muscles and bones. Traditional types of weight-loading exercise, such as weight lifting, produce stronger muscles and bones but cannot be performed in the rhythmic, continuous fashion needed to improve aerobic fitness. Traditional weight-bearing exercise, such as jogging, improves aerobic fitness, but does little to enhance muscular strength. This type of exercise also increases a user's risk of injury by placing high impact forces on their joints.

The difference between the Crossrobics 1650 LE conditioning system and other types of exercise is the patented Crossrobics loading system. The Crossrobics loading system allows the user independent control of both speed level and resistance. The exercise speed is controlled with the FASTER and SLOWER keys on the console. The resistance is controlled by selecting the appropriate number of plates on the weight stack.

The training emphasis of any given workout depends on how the two variables, speed level and resistance, are combined. A strength workout consists of lower exercise speeds and heavier resistance. A power workout combines faster exercise speeds and heavy resistance. Fast exercise speeds and lighter resistance improve leg speed. An endurance program using slower speeds and lighter weights is ideal for the long-duration workouts recommended by weight-control experts.

2650 UE

CROSSROBICS® TROUBLESHOOTING SYSTEMATIC ELECTRICAL

Please refer to your owner's manual for detailed instructions. If you do not have an owner's manual please call our Customer Service phone number to order one.

1. Verify AC voltage at wall outlet (110 - 120 VAC).

2. Verify AC voltage at end of AC cord, if AC cable detaches from the power supply. (110 - 120 VAC)

3. Verify DC voltage from the power supply. You should get 12-17 VDC if your DC cable detaches from the power supply, and 10-12 VDC if your DC cable does not detach from the power supply and is prior to 10/27/97. If the power supply is a newer style and has part number 24379 (PS-5), or part number 24381(PS-7), you should get 12-19 VDC.

4. Verify DC voltage at end of DC cable (shake cable during test).

5. Verify DC voltage at power connector (are wires firmly attached to molex connector?)

6. Check all wiring for good connections on the alternator.

7. Verify DC voltage drop under load by measuring voltage at the white wires, using the alternator casing as a ground. Use leads with alligator clips to eliminate the need for an assistant. Voltage under load should be between 9-12 VDC on the older style, and no less than 12 VDC on the newer style power supply.

8. Verify DC voltage at pins 1 and 9 (C1 consoles-pins 4 and 5) on the grey cable.

8. Test diode – Remove the diode from the alternator. Place the leads from your voltmeter on either side of the diode touching the wire. Select the diode check setting on your voltmeter and verify 0.5 Volts. Next, reverse the leads. Your next reading should be overload (O.L.).

10. Test continuity of the grey cable/cross check

11. Test load resistor (0.7 Ohms-gold metal / 0.5 Ohms-ceramic).

12. Perform the positive output to field test on the alternator

    Turn the power off.
    Remove the black wire from the B+ terminal on the alternator.
    Remove the brown wire from the field terminal on the alternator.
    Place alligator clips on the B+ terminal and the field terminal of alternator.
    Run on machine for 15-20 seconds.
    If full resistance is achieved during this time, your alternator has correct current flow; it is accepting current (field) and producing current (B+).

13. Swap consoles, power supply and cables to verify problem stays with machine.

CROSSROBICS® MECHANICAL TROUBLESHOOTING

Please refer to the owner's manual for detailed instructions. If you do not have an owner's manual please call our Customer Service phone number to order one.

1. Inspect the guide rods for proper lubrication.

2. Inspect the weight stack pulleys and the weight stack belt for excessive wear and fraying.

3. **1650 LE:** Inspect the arms for side to side play, shim if necessary. (Shims are available by calling the Customer Service Department). Inspect the step chains for frozen links.

4. **2650 UE:** Align the adapter blocks vertically and verify that the handlebar is parallel to the weight stack. Inspect the input chains for twisting near the adapter blocks and for frozen links.

5. Inspect the drive chain for frozen links.

6. Check that the drive sprocket set screw is tight.

7. Remove the HTD belt and inspect it for cracks, fraying or any other unusual or excessive wear.

8. Remove the poly-v belt and inspect it for cracks, fraying or any other unusual or excessive wear.

9. Inspect the Pivot Assembly pulleys for wear, and spin the poly-v pulley to check the bearings.

10. Spin the alternator pulley to check the bearings, and inspect the pulley for wear.

CROSSROBICS® MAINTENANCE SCHEDULE

This is a quick guide to preventive maintenance for the 1650 LE and 2650 UE Crossrobics Exercise Systems. Please refer to the owner's manual that is provided with each machine for complete service, repair, and operating instructions.

PART	RECCOMENDED ACTION	FREQUENCY	CLEANER	LUBRICANT
Console	Wipe Clean	Daily	Water	N/A
Covers	Clean and Inspect	Daily	Diluted house hold cleaner	N/A
Seat	Clean	Daily	Diluted house hold cleaner	N/A
Weight Stack Belt & Connectors	Inspect	Each week or after 70 hours	N/A	N/A
1650 LE Pedal Arm Chains, 2650 UE Input Chains & Drive Chain	Lubricate	Each week or after 70 hours	N/A	30W motor oil
	Remove, clean and lubricate	Every 3 months or 900 hours	Degreaser	30W motor oil
Alternator and Drive Belts	Check tension & Inspect	Each week or after 70 hours	N/A	N/A
Guide Rods	Clean and lubricate	Each week or after 70 hours	Window cleaner	Silicone spray
Pedal Arm Return Springs	Inspect and wipe down	Each week or after 70 hours	N/A	30W motor oil
1650 LE Bottom stop spring	Wipe clean and graese	Every 3 months or 900 hours	N/A	Heavy multi purpose grease

Note: Use of lubricants other than those specified will result in diminished performance and a shorter life span for that part.

Figure 23: Right Side View -1650 LE

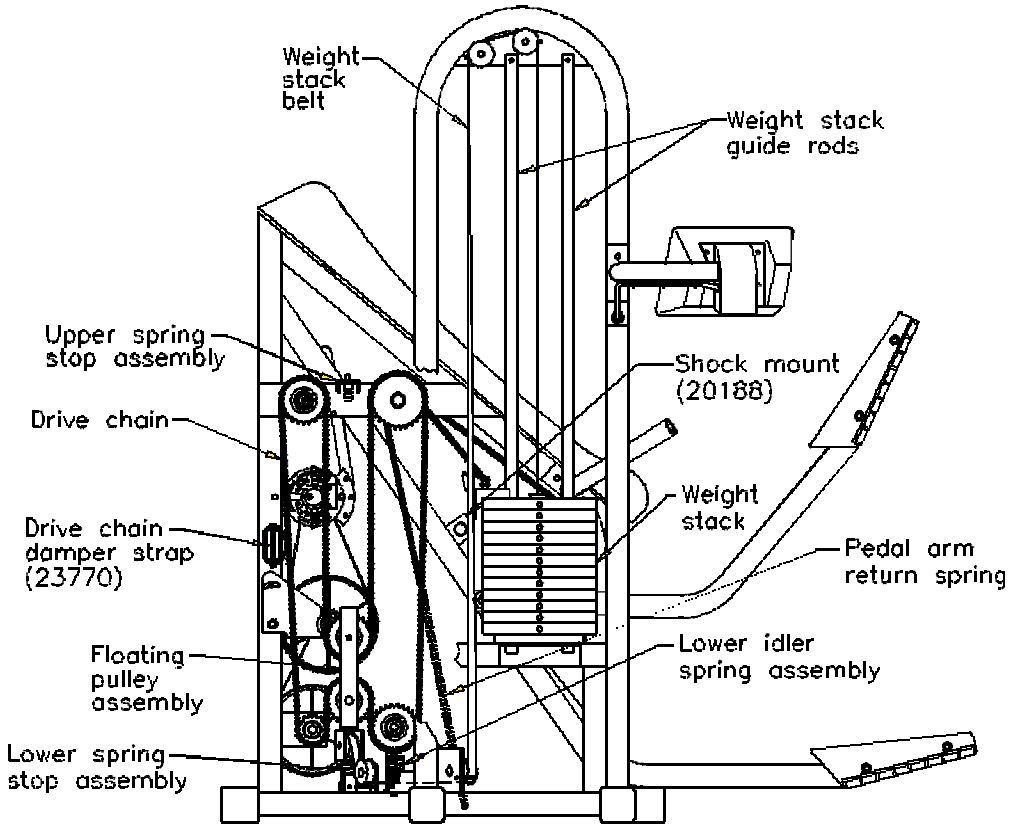

Figure 24: Left Side View - 1650 LE

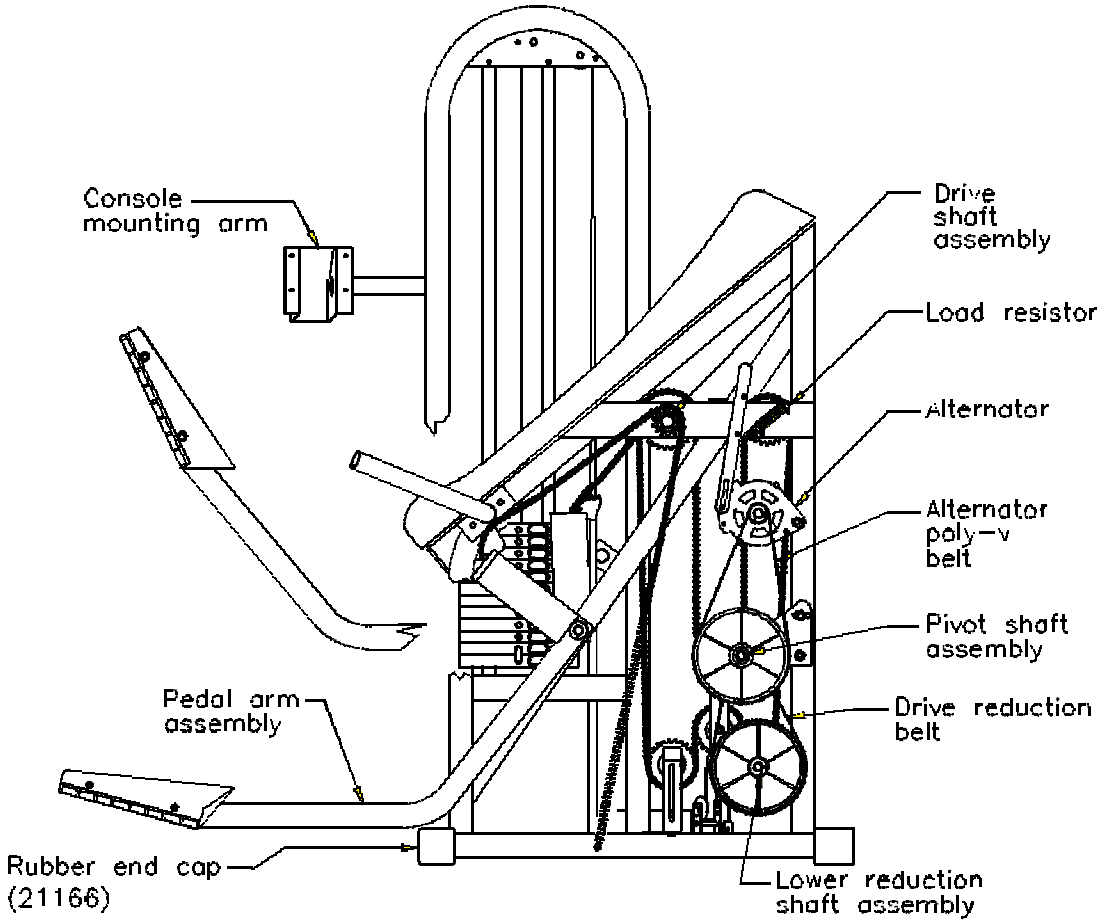

Figure 25: Pedal Arm Assembly

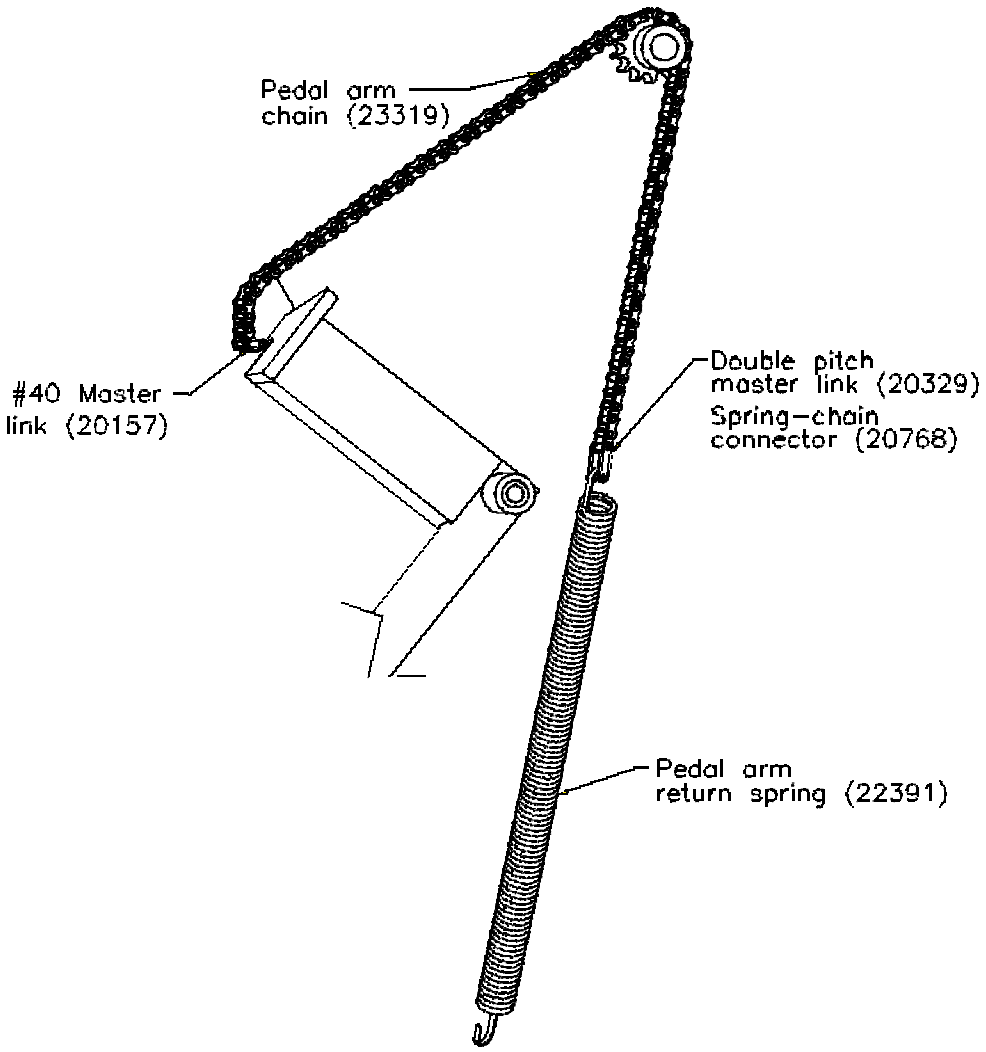

Figure 26: Right Side View - 2650 UE

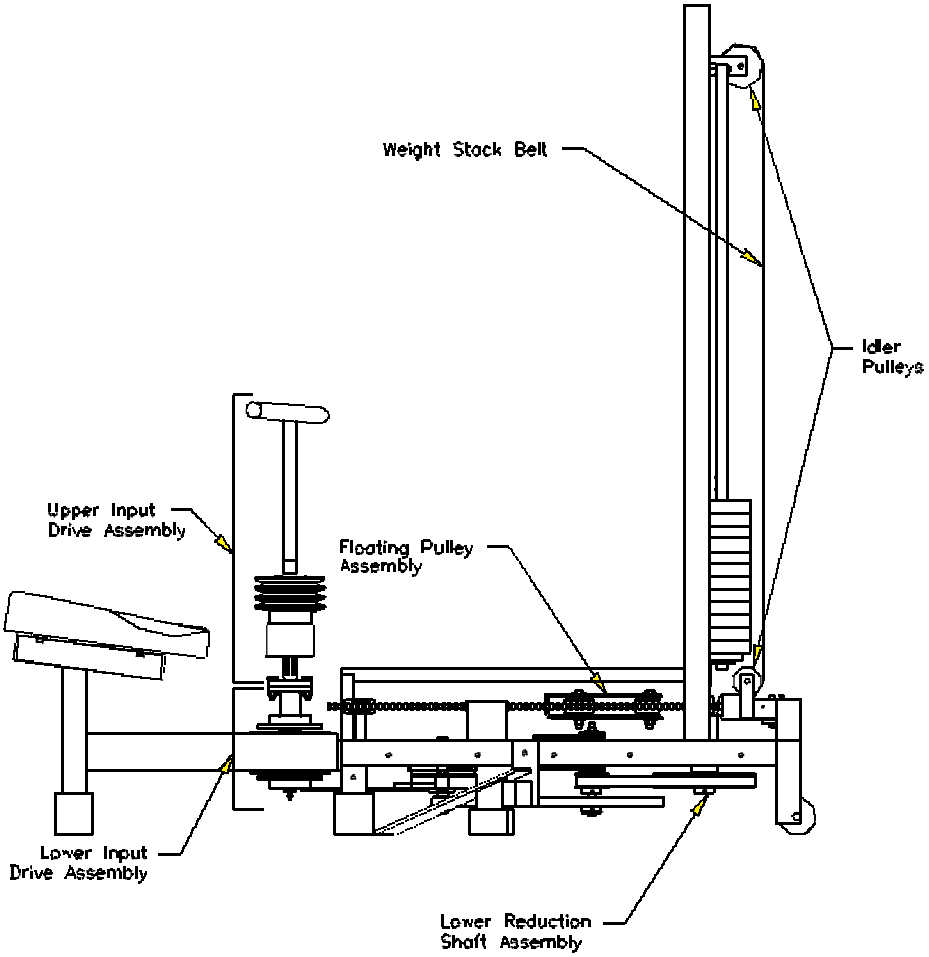

Figure 27: Top View - 2650 UE

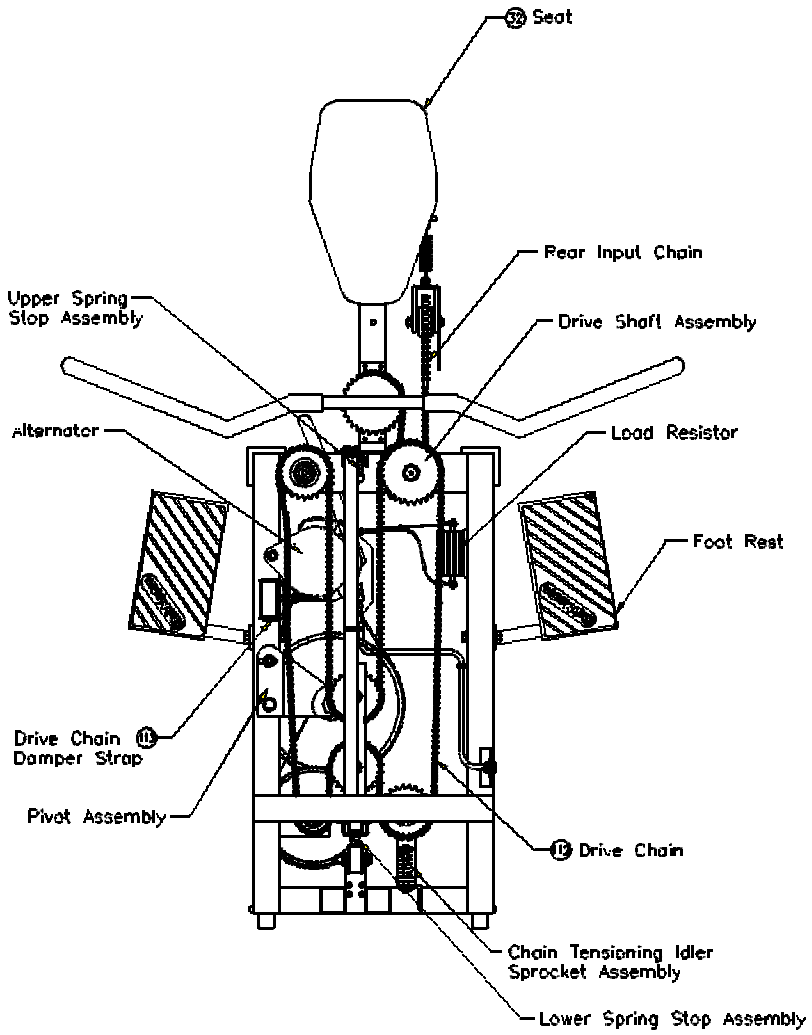

Figure 28: Weight Stack Assembly

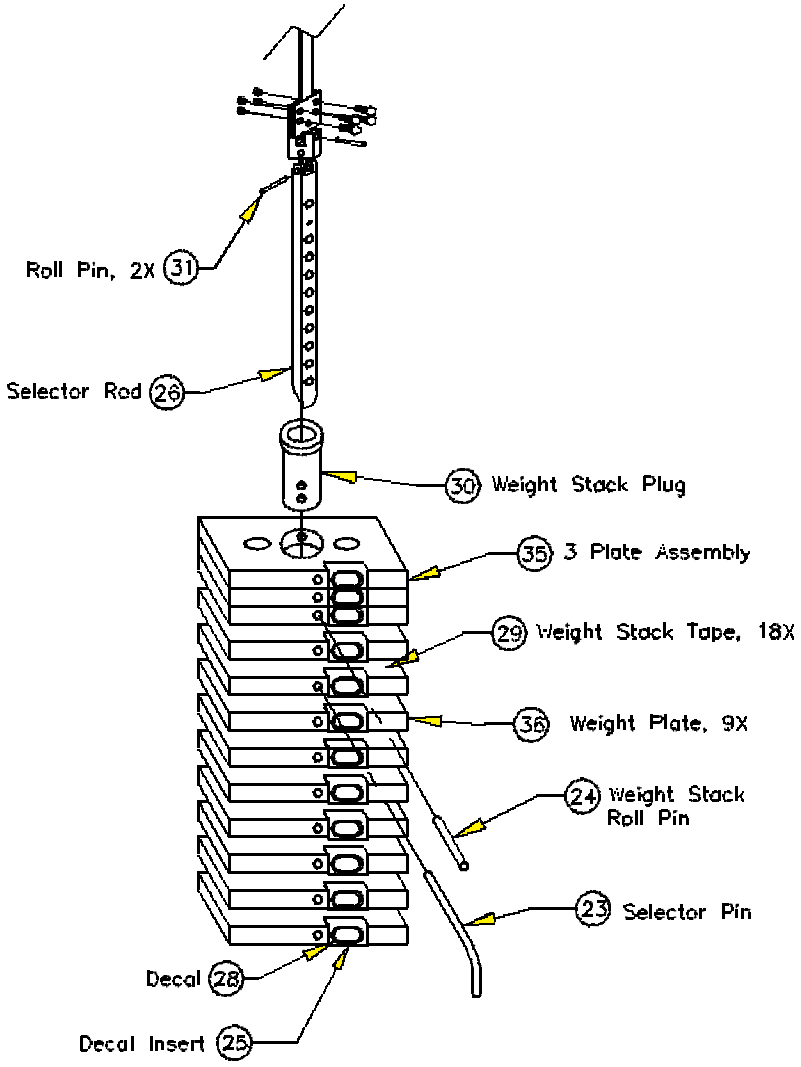

STRATUS SYSTEMS

3900 RC

The Stratus systems cycle ergometers have 14 levels of intensity for the MANUAL program and 20 levels of intensity for the other programs. The Stratus uses a variable resistance system to maintain constant power within any given intensity level. The resistance decreases as you pedal faster and increases as you pedal slower. The variable resistance system ensures you will do the same amount of work regardless of how fast or slow you pedal.

3300 CE

3300 CE/3900 RC STRATUS SYSTEMS - ELECTRICAL TROUBLESHOOTING

Please refer to your owner's manual for detailed instructions. If you do not have an owner's manual please call our Customer Service phone number to order one.

1. Verify that all connections on the power control board are secure.
2. Adjust the inductive switch to within 1/32" of the speed sensor disk.
3. Test pins 2 and 3 of the battery connector for a minimum of 6.1 VDC.
4. Plug battery connector back into power control board.
5. Measure VDC between test points 7 and 12 of the power control board for a minimum of 6.0 VDC
6. Test pins 1 and 2 of the inductive switch connector while pedaling. VAC should increase with RPM.
7. Re-connect the inductive switch connector to the power control board.
8. Measure VAC between test points 10 and 12 of the power control board while pedaling. Voltage should increase with RPM.
9. Unplug the alternator wiring connector from the power control board.
10. Perform the Positive output to field test using alligator clips between the B+ and FLD terminals.
11. Re-connect the alternator wiring connector to the power control board.
12. Remove the diode from the FLD terminal of the alternator.
13. Test the diode (Ohms). High reading in one direction, Low reading when leads are reversed.
14. Re-connect the diode to the FLD terminal of the alternator.
15. Test pins 1 and 2 of the load resistor connector for a reading of .5 Ohms.
16. Ohm and cross check the main cable assembly.

3300 CE/ 3900 RC STRATUS SYSTEMS - MECHANICAL TROUBLESHOOTING

Please refer to your owner's manual for detailed instructions. If you do not have an owner's manual please call our Customer Service phone number to order one.

1. Verify that the poly-v belt is adjusted so that the compressed distance of the valve spring, between the spring retainers, is 1 11/16" (4.3 cm).

2. Verify the drive chain alignment and tension (max. deflection 1" or 2cm).

3. Remove the drive chain and inspect the chain for frozen links.

4. Verify that the jam nut and bearing retainers on the crank assembly are tight.

5. Spin the pedal cranks with the drive chain removed to check the pedal bearings and inspect the crank assembly for wear.

6. Loosen the J bolt assembly and lower the Alternator/Flywheel assembly.

7. Verify that the jam nut on the flywheel and the alternator/flywheel assembly brackets are tight.

8. Adjust the inductive switch to 1/32" from the speed sensor disk.

9. Spin the alternator/flywheel assembly to check the alternator bearings.

10. Inspect the poly-v pulley for excess wear and spin the pulley to check the intermediate bearings.

11. Disassemble the intermediate shaft assembly and inspect the intermediate shaft and wave washer for wear.

12. Inspect the poly-v belt for wear.

13. Verify that the freewheel, on the poly-v pulley, spins freely in one direction and engages in the other.

14. Verify proper seat pin engagement (3300 CE) and seat track wheel adjustment (3900 RC).

3300 CE/ 3900 RC STRATUS SYSTEMS - MAINTENANCE SCHEDULE

This is a quick reference guide to preventive maintenance for the 3300 CE/3900 RC Stratus Systems. Please refer to the owner's manual that is provided with each machine for complete service, repair and operating instructions.

PART	RECOMMENDED ACTION	FREQUENCY	CLEANER	LUBRICANT
Console	Wipe clean	Daily	Water	N/A
Covers	Clean and inspect	Daily	Soap and water, diluted household cleaner	N/A
Seat	Clean	Each week, or after every 70 hours of use	Soap and water, diluted household cleaner	N/A
Pedals and footstraps	Clean and inspect	Each week, or after every 70 hours of use	Soap and water, diluted household cleaner	N/A
Seat post	Clean and inspect	Each week, or after every 70 hours of use	Clean, dry rag	N/A
Seat post locator pin	Inspect and lubricate	Each week, or after every 70 hours of use	N/A	30W motor oil or equivalent
Crank bearings	Inspect	Each month, or 300 hours	N/A	N/A
Drive chain	Lubricate	Each month, or 300 hours	N/A	TriFlow™ or equivalent
	Clean, lubricate, and adjust	Each month, or 300 hours	Degreaser	TriFlow™ or equivalent

Note: Use of lubricants other than those specified will result in diminished performance and a shorter life span for that part.

STRATUS NOTES

- Regulator on the power control board regulates B+ to 10.5 VDC, anything over that and the alternator is shut down.
- Power control board regulates the field signal (previously this was a console function)
- Console regulates power to achieve the proper resistance by turning the load resistor on/off as needed. New ceramic load resistor is physically much larger in diameter and longer in length.
  New specs are .5 Ohm 240 Watt
- Battery is being discharged if RPM's are less than 50 and the console is on.
- 'U' bolts are 1" longer than the Spinnaker bikes
- Power control board has an aluminum block attached to it to act as a heat sink. This block will be considered part of the power control board assembly and will be attached to every control board. Heat sink paste (thermal compound) will be used to help dissipate heat. (part # 13590)
- 7 groove Poly-V belts are used.
- The Heart Rate transmitter will be housed in a square tube welded to the handlebars and a plastic cover will screw on to the open end of the tube, facing the user, to protect the transmitter.
- Machines are Fit-Linxx compatible.
- All machines use the C4 or C5 console.
- New brackets have been made to mount the alternators and the load resistor on the 3900.
- The intermediate brackets of all bikes will have holes drilled to allow use on stratus or spinnaker bikes.
- Handlebars will be different between Stratus and Spinnaker due to HR mounting tube welded to Stratus handlebars.
- Alternator has flywheel, and speed sensor disk mounted to it.

Figure 29: 3300 CE - Right Side View

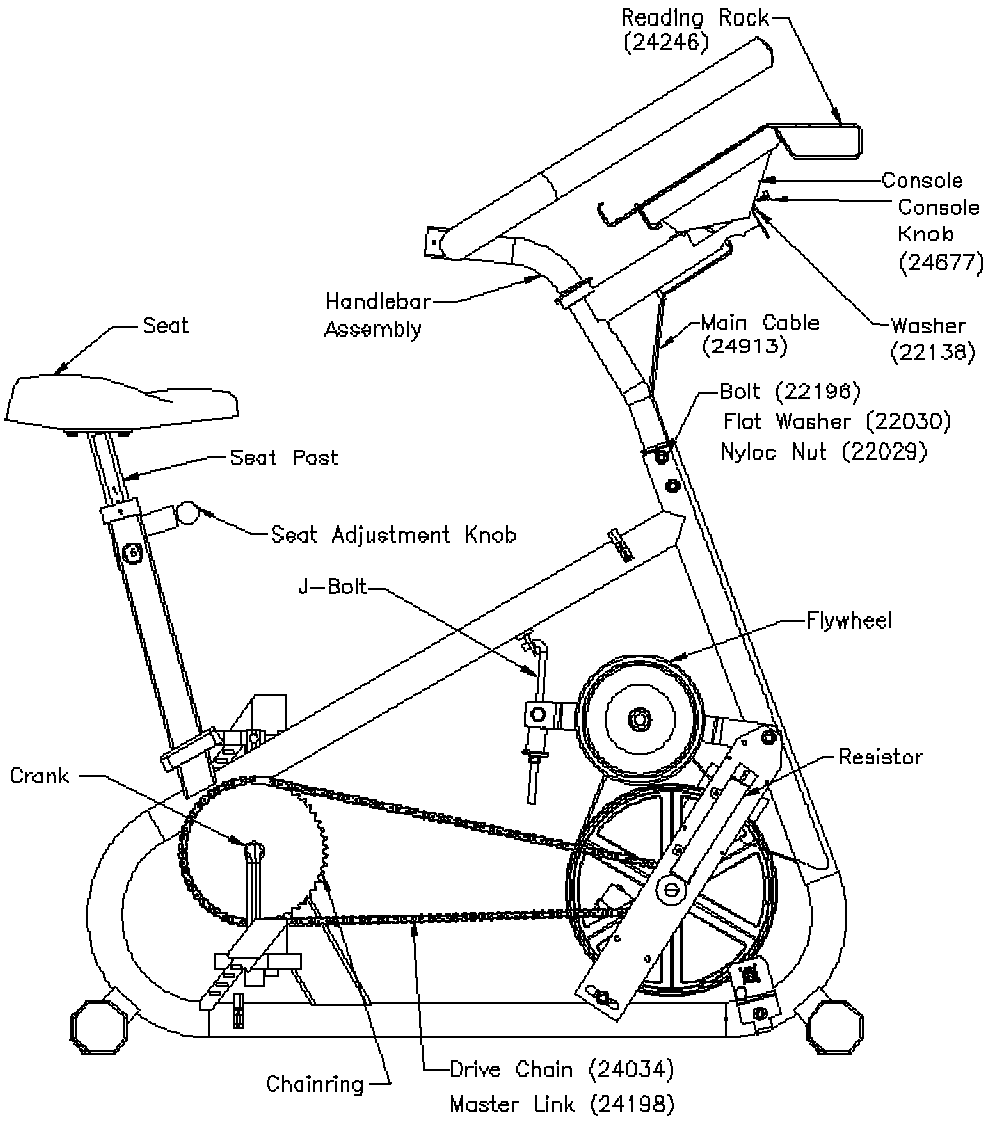

Figure 30: 3300 CE - Left Side View

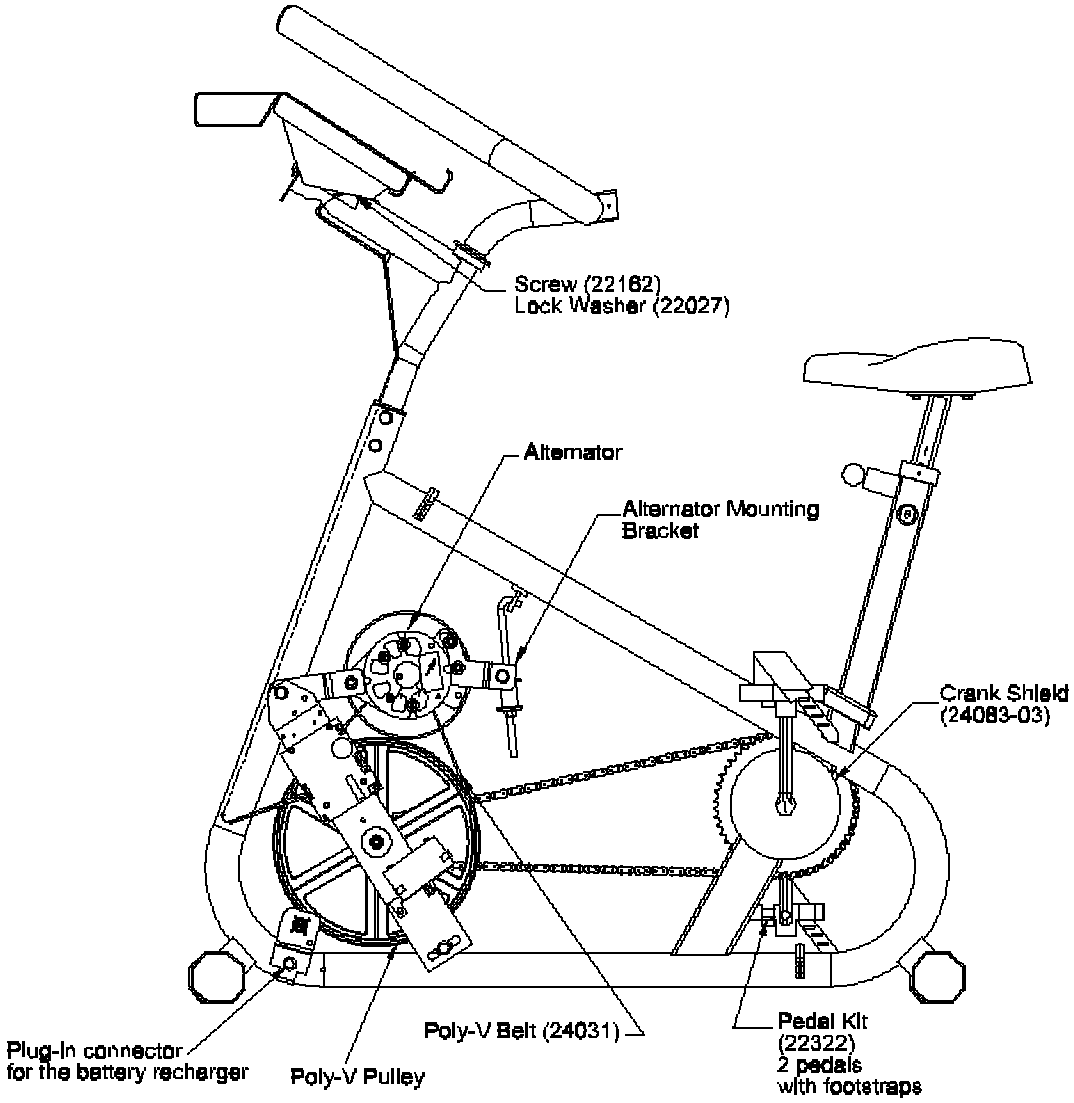

Figure 31: 3900 RC - Right Side View

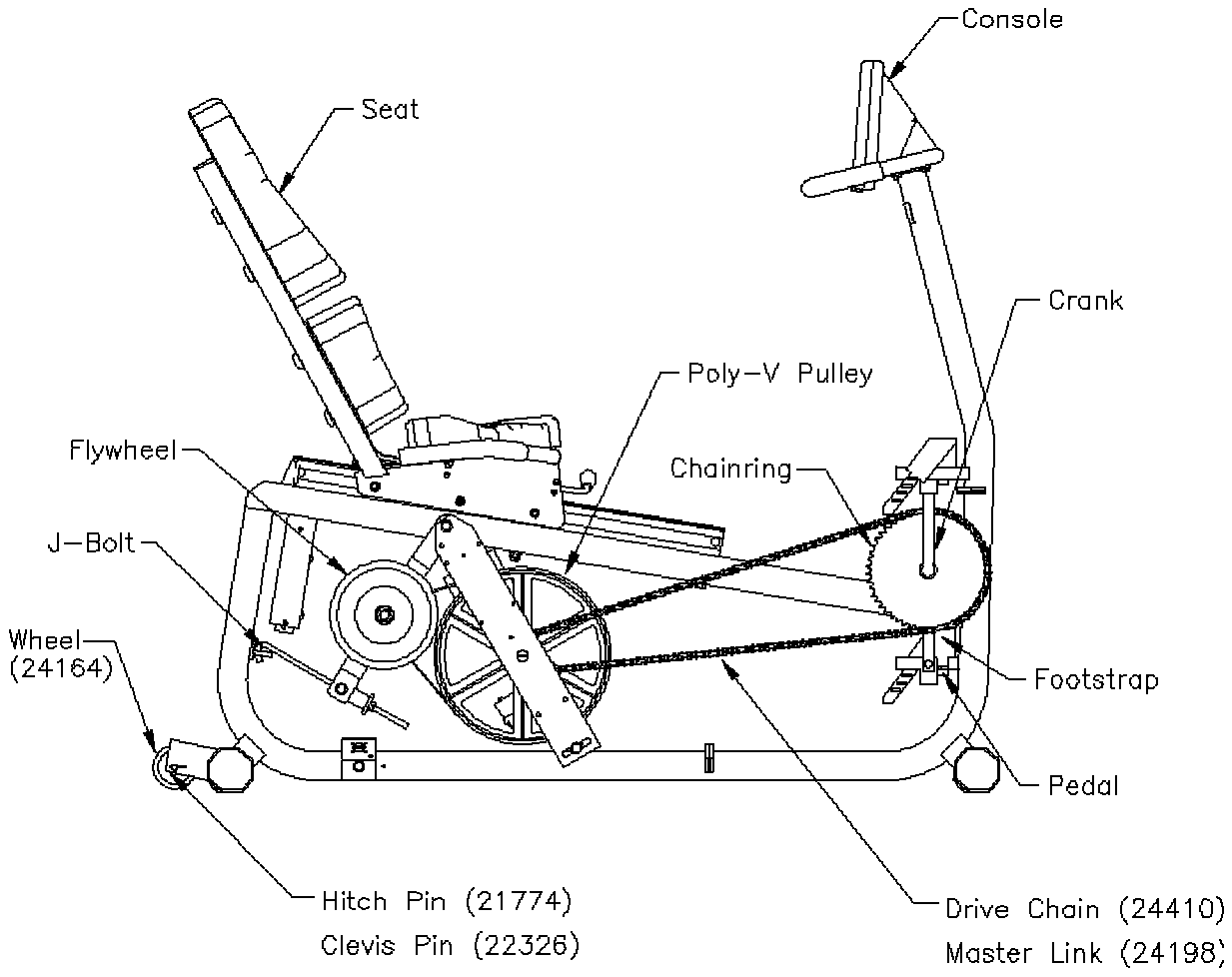

Figure 32: 3900 RC - Left Side View

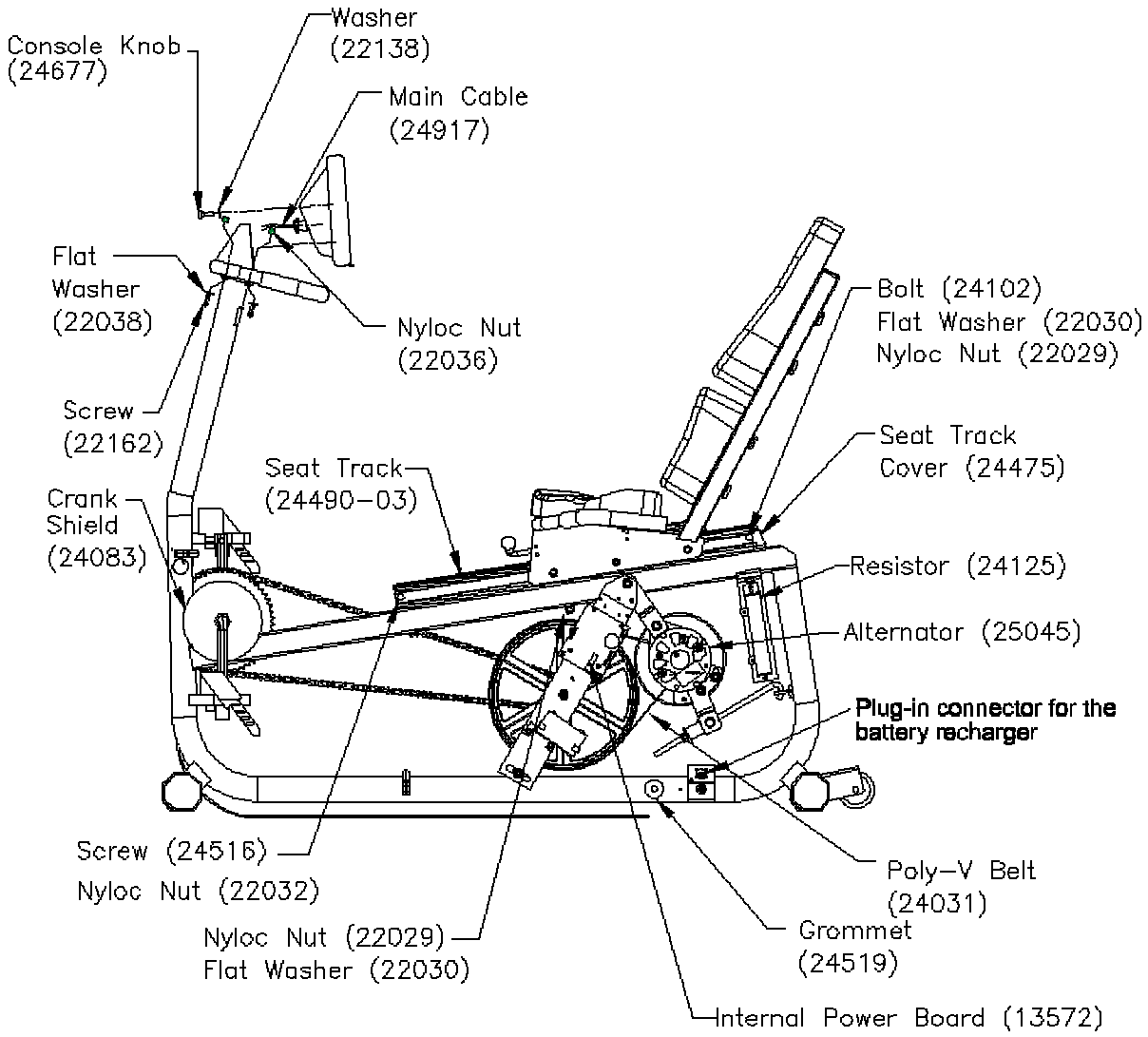

Figure 33: 3300 CE - Seat Adjustment Pin

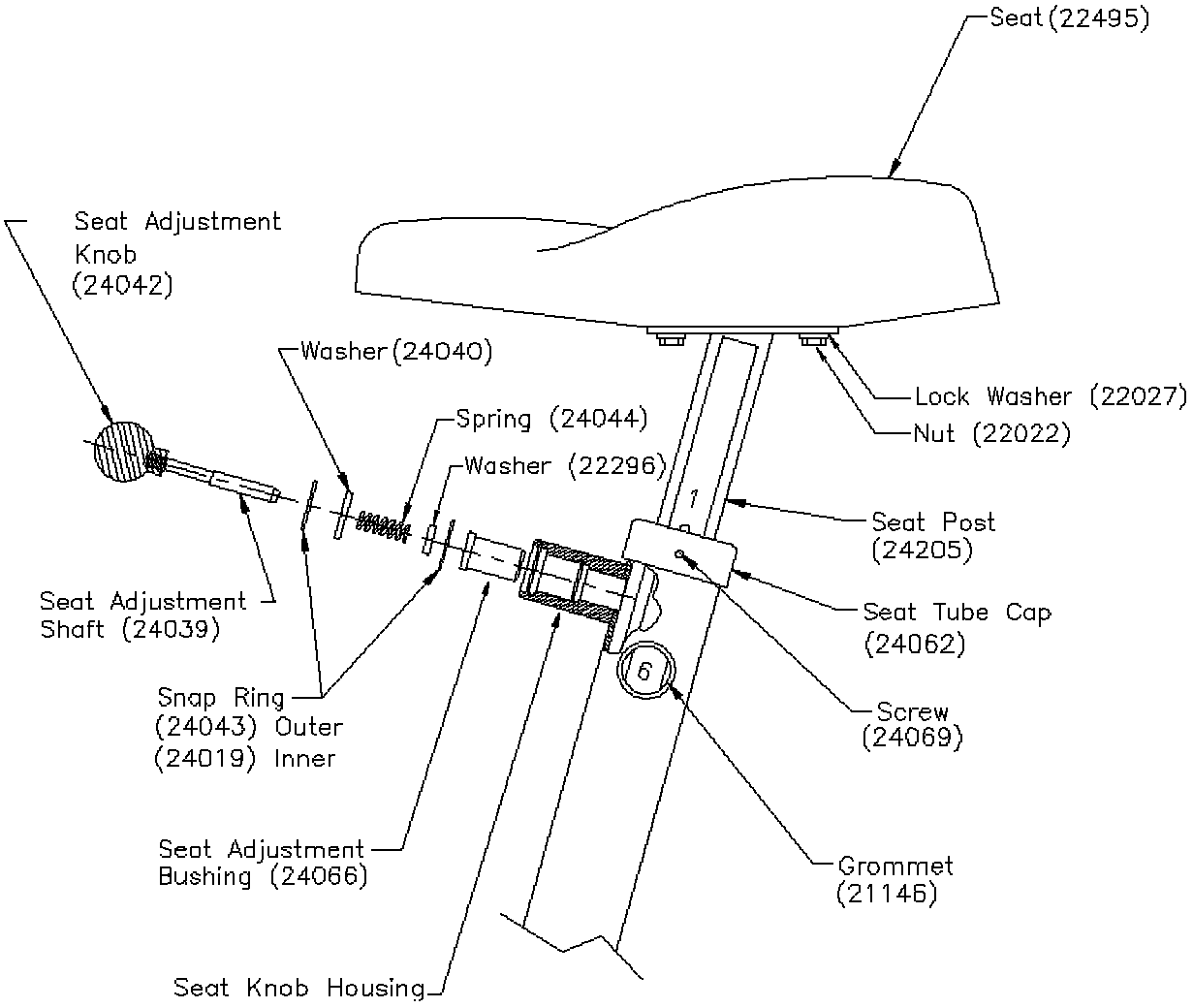

Figure 34: 3900 RC - Seat Assembly

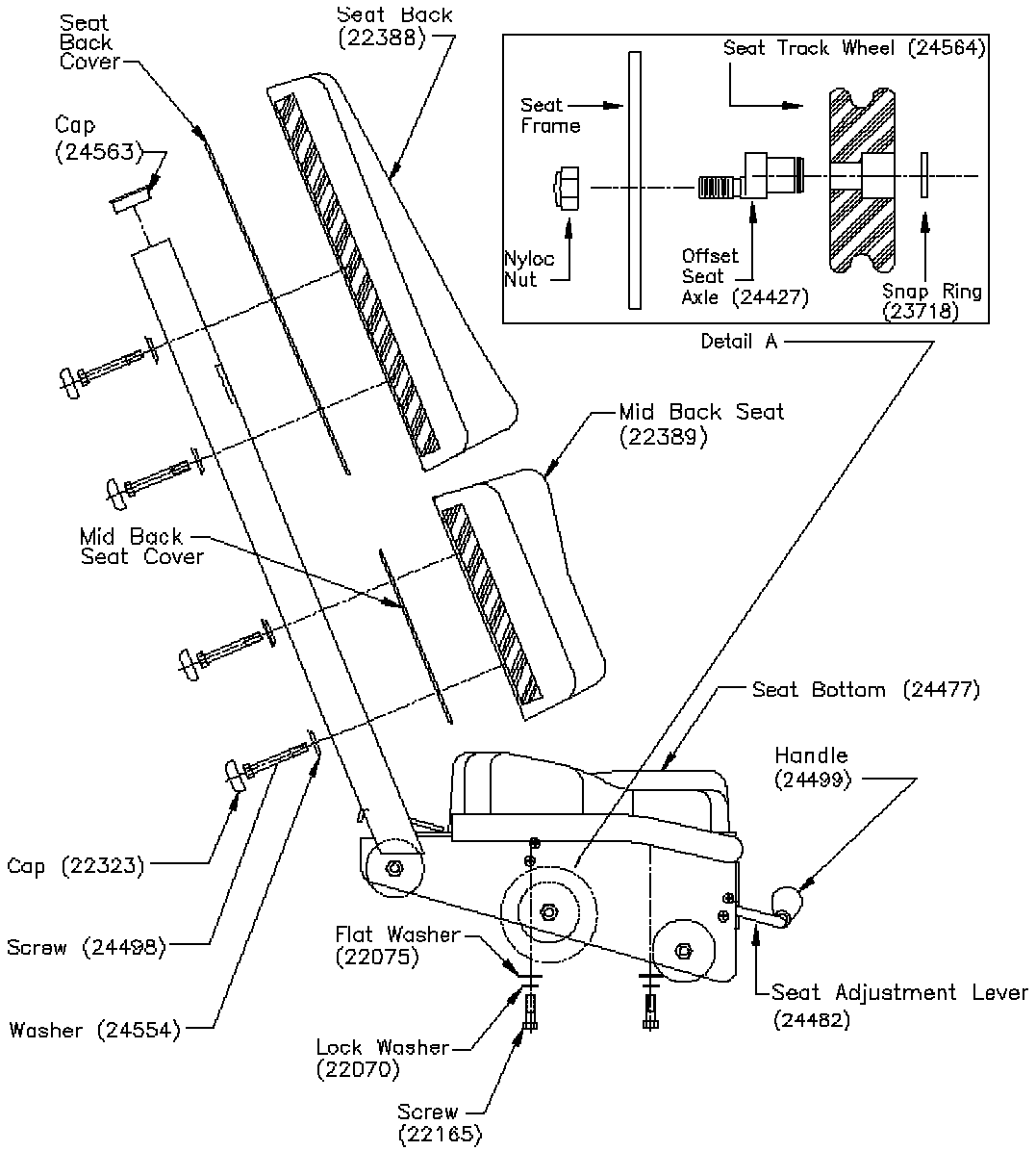

Figure 35: Drive Chain Assembly

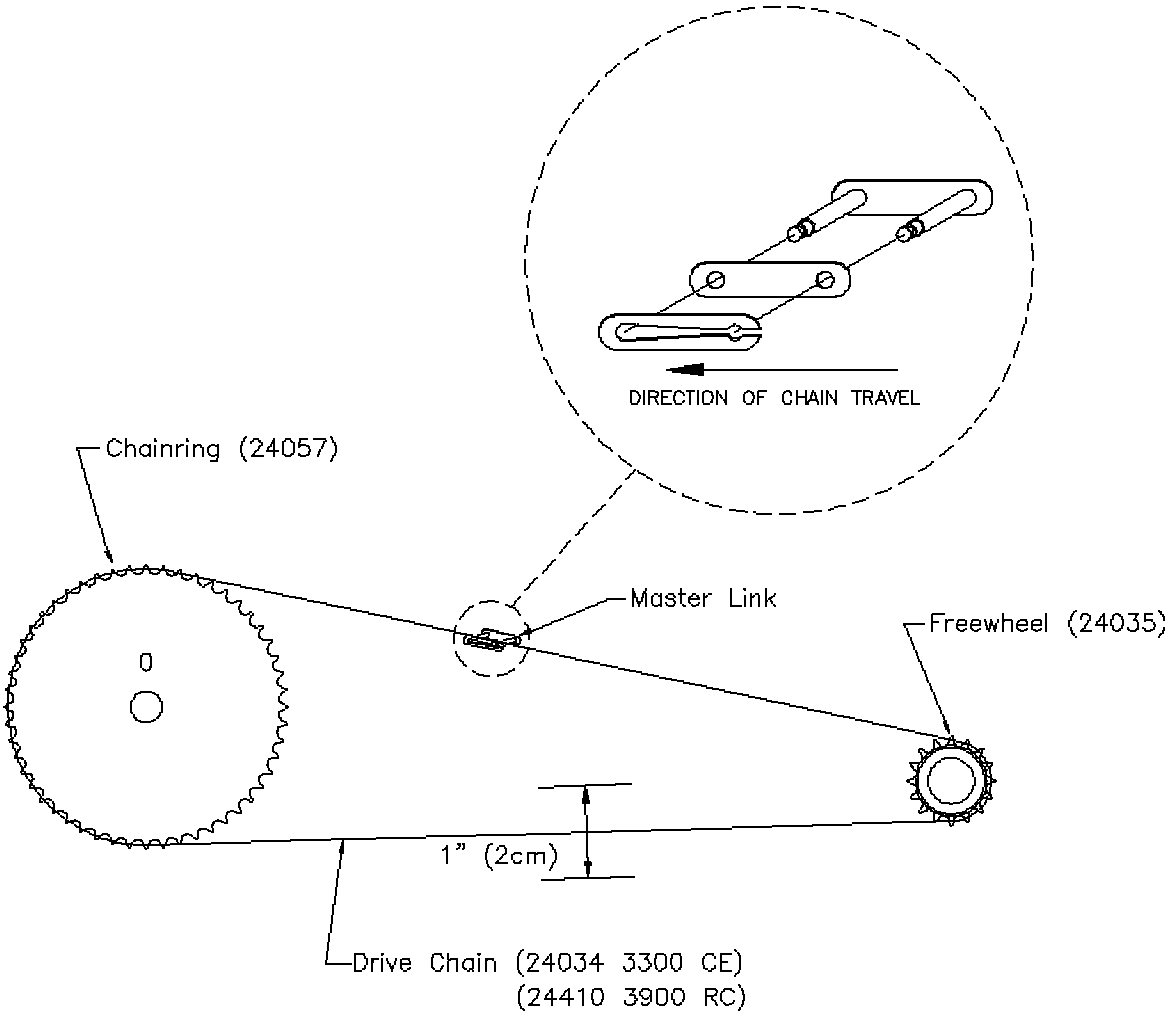

Figure 36: Intermediate Shaft Assembly

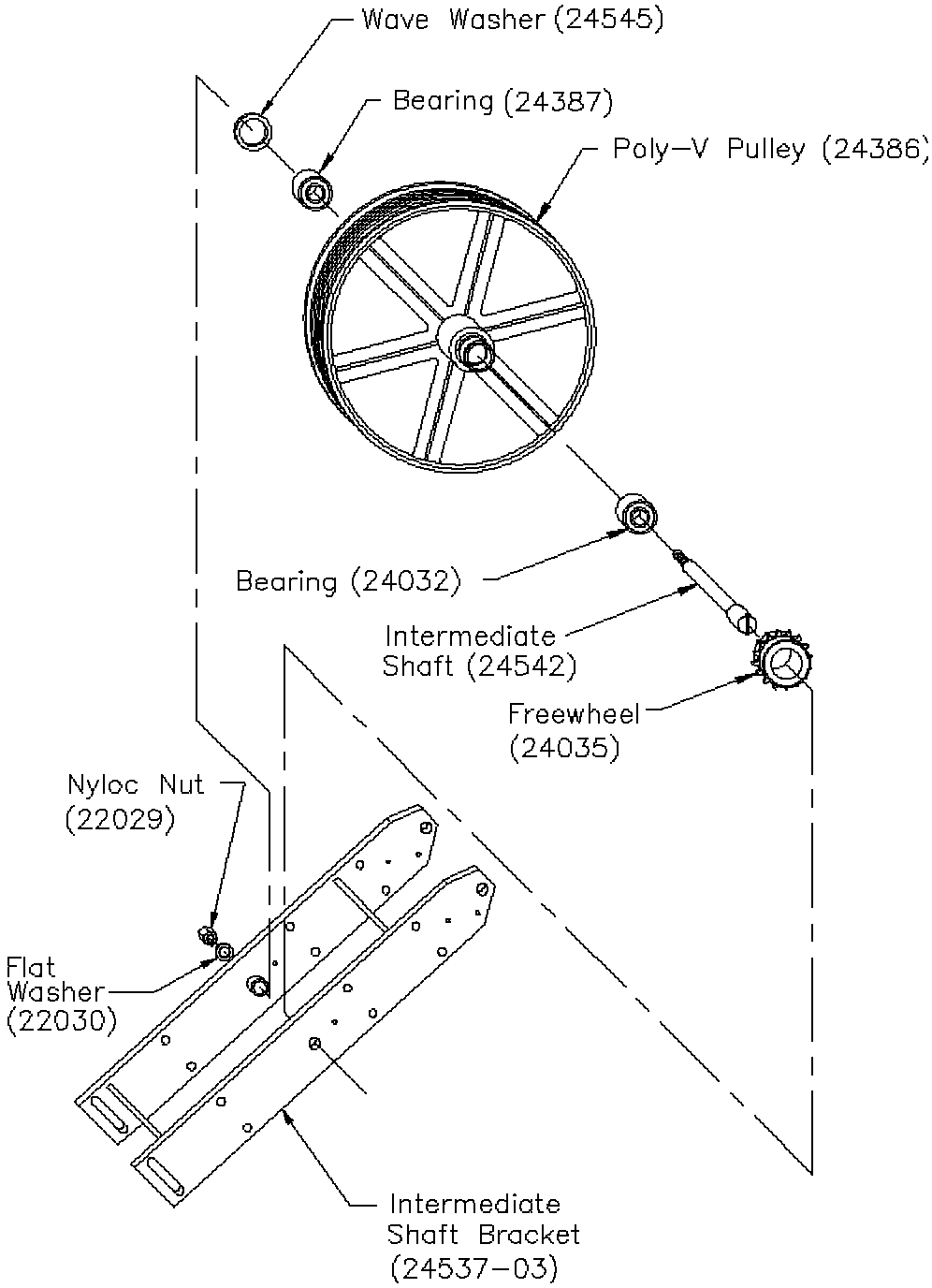

Figure 37: J-Bolt Assembly

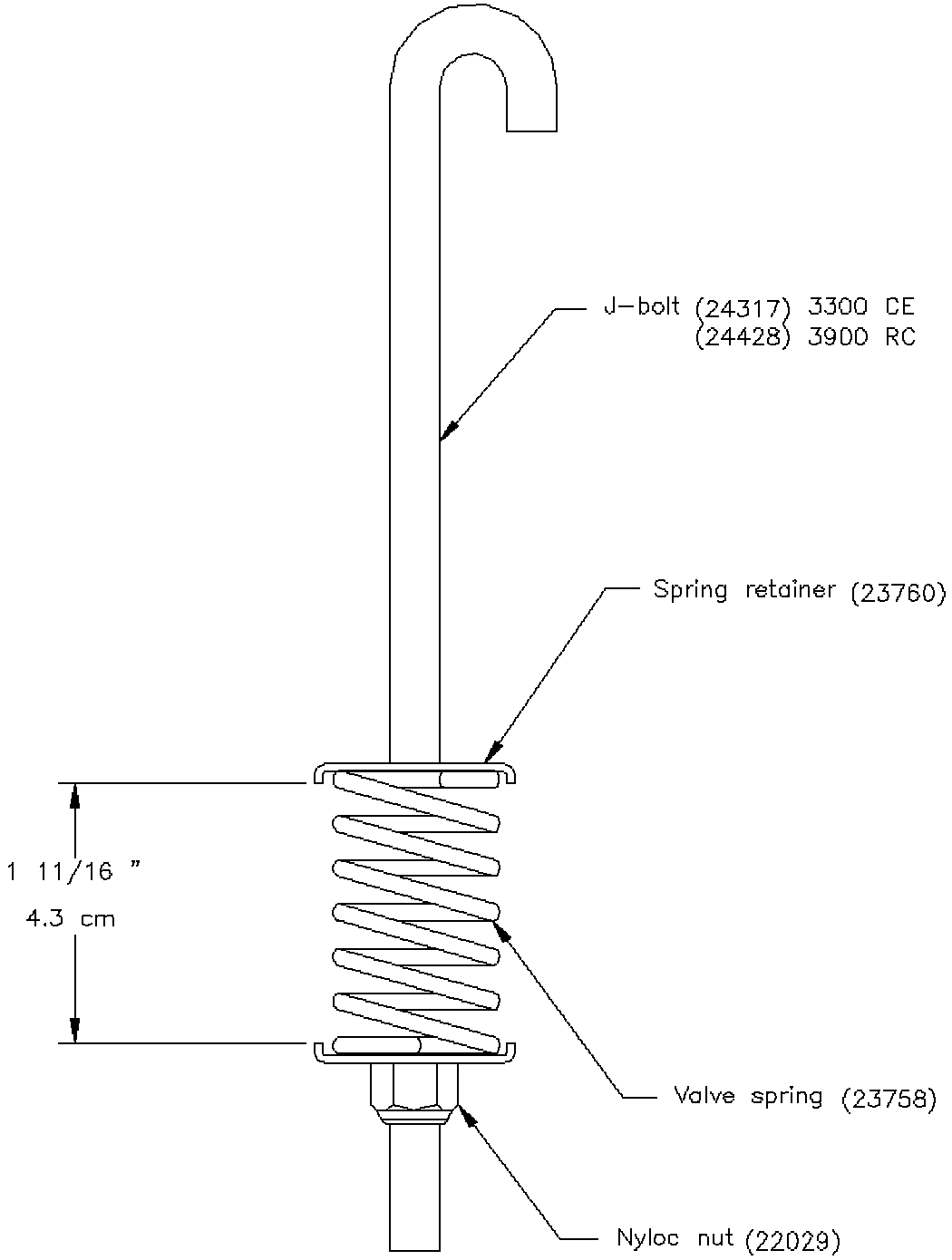

Figure 38: Crank Assembly

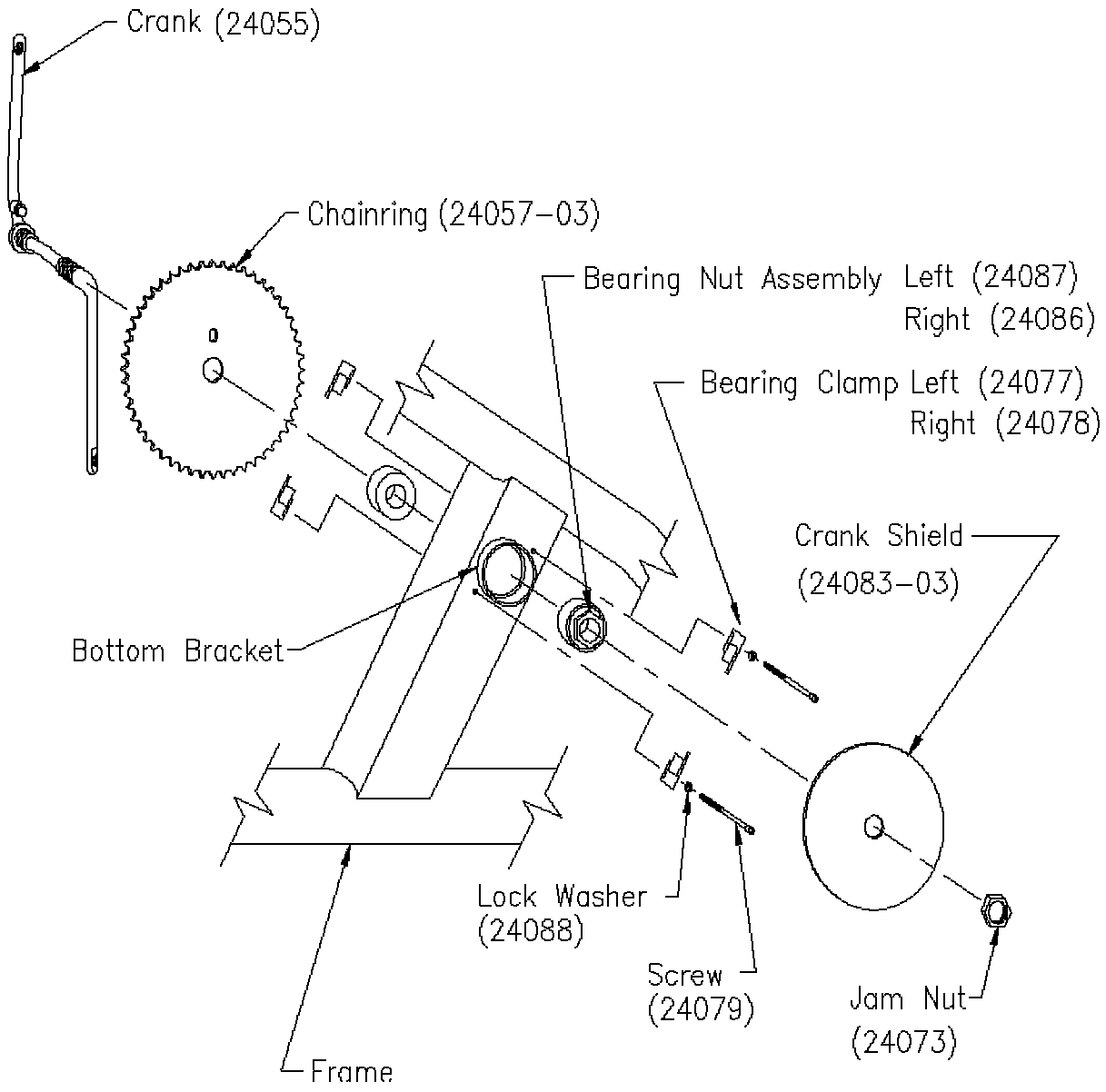

Figure 39: Alternator Assembly

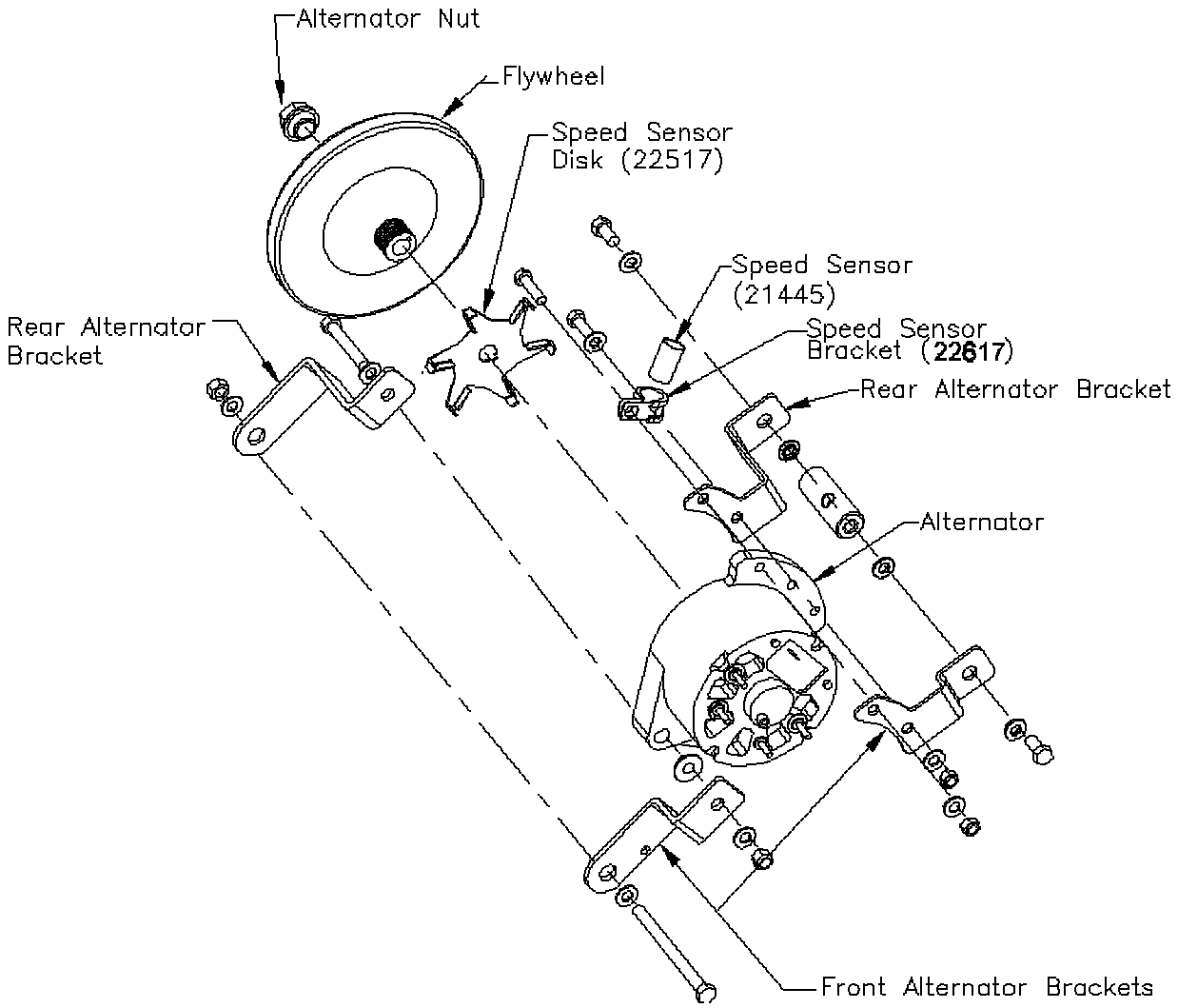

MOMENTUM SYSTEMS

3800 RC

The Momentum systems cycle ergometers have 20 levels of intensity for each exercise program. The Momentum uses a variable resistance system to maintain constant power within any given intensity level. The resistance decreases as you pedal faster and increases as you pedal slower. The variable resistance system ensures you will do the same amount of work regardless of how fast or slow you pedal.

3400 CE

3400 CE/3800 RC MOMENTUM SYSTEMS - ELECTRICAL TROUBLESHOOTING

Please refer to your owner's manual for detailed instructions. If you do not have an owner's manual please call our Customer Service phone number to order one.

1. Remove the side covers.

2. Test the battery connection at the power control board (PCB). Measure VDC between yellow test points 7 and 10 (near the battery connector) of the PCB for a minimum of 6.0 VDC. If the measured voltage is 6.0 VDC or more, skip to step 6.

3. Test the battery. Unplug the battery connector from the power control board and locate pin 2 and pin 3 in the end of the battery connector.

4. Use a voltmeter to verify that the voltage between pin 2 (negative) and pin 3 (positive) is a minimum of 6.0 VDC. Install the battery charger for at least 24 to 48 hours if the voltage measured is below 6.0 VDC. It is okay to use the machine with the battery charger connected. After 48 hours, repeat step 3 - 4. If the voltage measured is below 6.0 VDC then the battery is bad.

5. Plug the battery connector back into the power control board.

6. Test the main cable. Remove the four console knobs from the console. Gently lift the console up and disconnect the main cable from the back of the console. Have an assistant pedal the bike and while you test pins 1 and 10 of the main cable at the console connection for a minimum of 6.0 VDC.

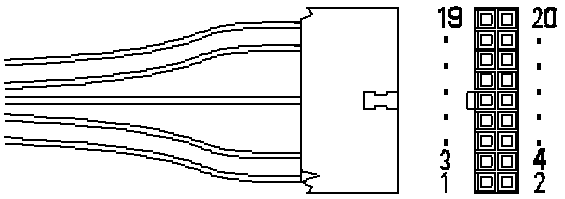

7. Reconnect the main cable to the console.

8. Verify that the inductive switch is adjusted to within 1/32" (0.8 cm) of the speed sensor disk on the front of the alternator.

9. Test the inductive switch. Unplug the inductive switch cable from the power control board and test pins 1 and 2 for AC voltage while pedaling. VAC should increase with RPM.

10. Test the inductive switch PCB point. Plug the inductive switch back in. Use a voltmeter to verify that the AC voltage at yellow test points 10 and 12 of the PCB increases when RPM's increase (test point 10 is positive, test point 12 is negative).

11. Test the alternator. Unplug the alternator wiring connector from the PCB.

12. Connect alligator clips between the B+ terminal and the FLD terminal of the alternator.

13. Pedal the cycle at a high RPM rate for 10-15 seconds or until you feel the resistance level change making it harder to pedal. If no resistance is felt then the alternator has a problem.

14. Test the diode. Unplug the diode from the FLD terminal of the alternator.

15. Use a voltmeter, set to Ohms to test the diode. A good diode will show a high resistance reading in one direction and a low resistance reading when the voltmeter leads are reversed.

16. Reconnect the diode to the FLD terminal of the alternator.

17. Reconnect the alternator wiring connector to the power control board.

18. Test the load resistor. Unplug the load resistor from the power control board and locate pin 1 and pin 2 at the end of the cable.

19. Use a voltmeter, set to Ohms to test the load resistor for a correct reading of 1/2 Ohm between pins 1 and 2.

20. Plug the load resistor back into the power control board.

21. Check the main cable assembly for continuity and cross check each wire in the cable to check for shorted wires. Call StairMaster® Customer Service at (800) 331-3578for assistance. International customers should contact their local distributors.

3400 CE/ 3800 RC MOMENTUM SYSTEMS - MECHANICAL TROUBLESHOOTING

Please refer to your owner's manual for detailed instructions. If you do not have an owner's manual please call our Customer Service phone number to order one.

1. Remove the side covers.

2. Adjust the HTD belt so that the belt is positioned centered on the large HTD pulley and the idler pulley assembly. Verify that the belt is tensioned so that it is tight enough that it does not ride off, and loose enough that it doesn't bind the pulleys. Retest the machine if HTD belt adjustment was necessary.

3. Verify that the jam nut and bearing nut assemblies on the crank assembly are tight.

4. Spin the crank assembly with the belt removed and listen for any clicking or grinding noises. The crank should spin freely 4 or 5 revolutions. Resume troubleshooting at step 6 if no noises are heard.

5. Verify that the jam nut on the flywheel and the alternator is tight.

6. Adjust the speed sensor to .10" from the speed sensor disk.

7. Spin the alternator/flywheel assembly and listen for clicking and/or grinding noises.

8. With the Poly-v belt removed, inspect the Poly-V pulley for excess wear and spin the pulley to check the Poly-V bearings.

9. Disassemble the intermediate shaft assembly and inspect the intermediate shaft for wear.

10. Inspect the Poly-V belt for wear.

11. Call StairMaster® Customer Service at (800) 331-3578 for assistance. International customers should contact their local distributors.

3400 CE/ 3800 RC MOMENTUM SYSTEMS - MAINTENANCE SCHEDULE

This is a quick reference guide to preventive maintenance for the 3300 CE/3900 RC Momentum Systems. Please refer to the owner's manual that is provided with each machine for complete service, repair and operating instructions.

PART	RECOMMENDED ACTION	FREQUENCY	CLEANER
Console	Wipe clean	Daily	Water
Covers	Wipe clean	Daily	Soap & water, diluted household cleaner
Seat	Clean	Each week, or after every 70 hours of use	Soap & water, diluted household cleaner
Pedals & footstraps	Clean & inspect	Each week, or after every 70 hours of use	Soap & water, diluted household cleaner
Seat post 3400 CE	Clean & inspect	Each week, or after every 70 hours of use	Clean, dry rag
Seat track 3800 RC	Clean & inspect	Each week, or after every 70 hours of use	Clean, dry rag
Crank bearings	Inspect	Each month, or 300 hours	N/A
Belts	Inspect	Each month, or 300 hours	N/A

Note: Use of lubricants other than those specified will result in diminished performance and a shorter life span for that part.

Figure 40: Final Assembly - Right Side View, 3400 CE

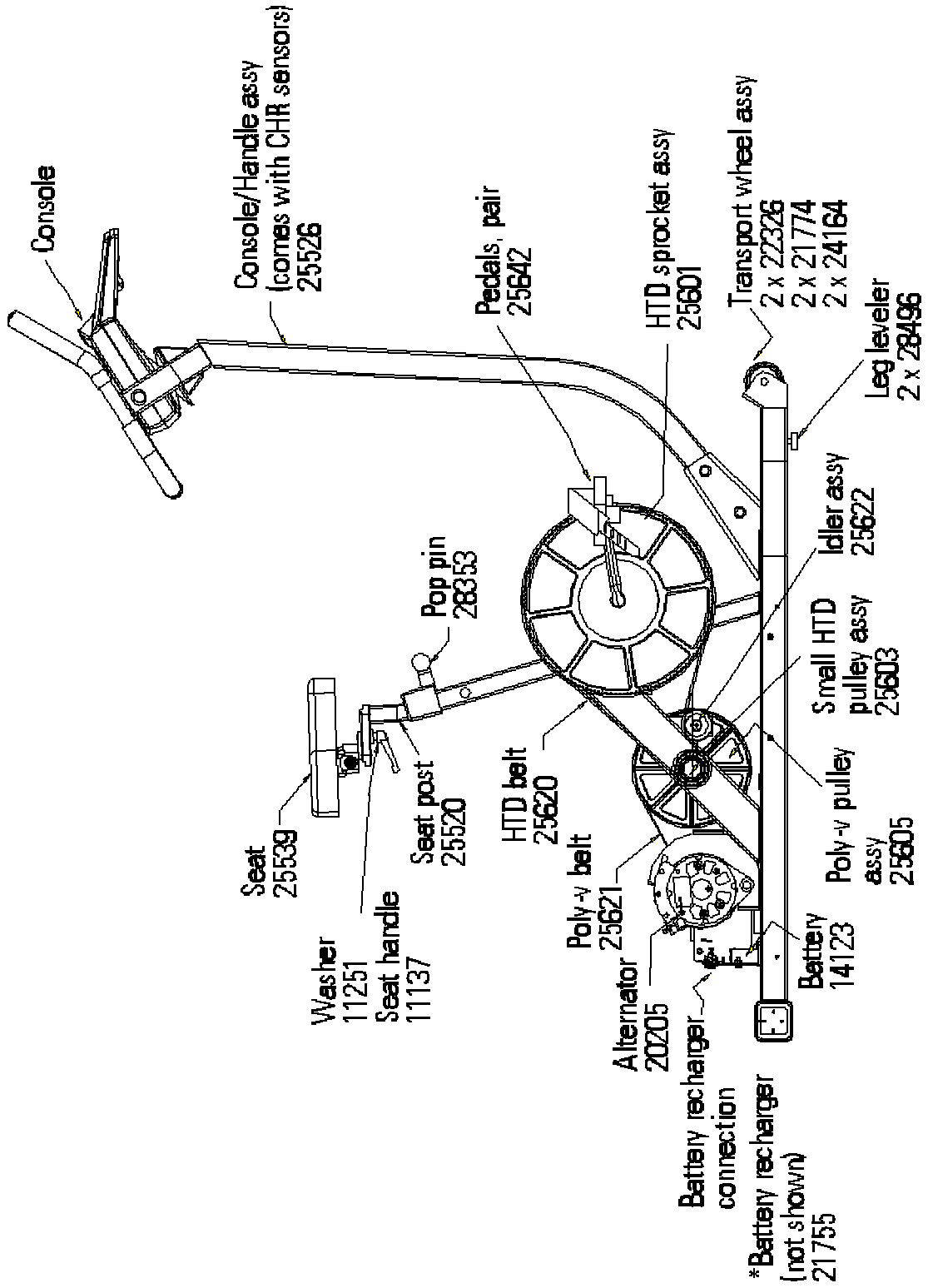

Figure 41: Final Assembly - Left Side View, 3800 RC

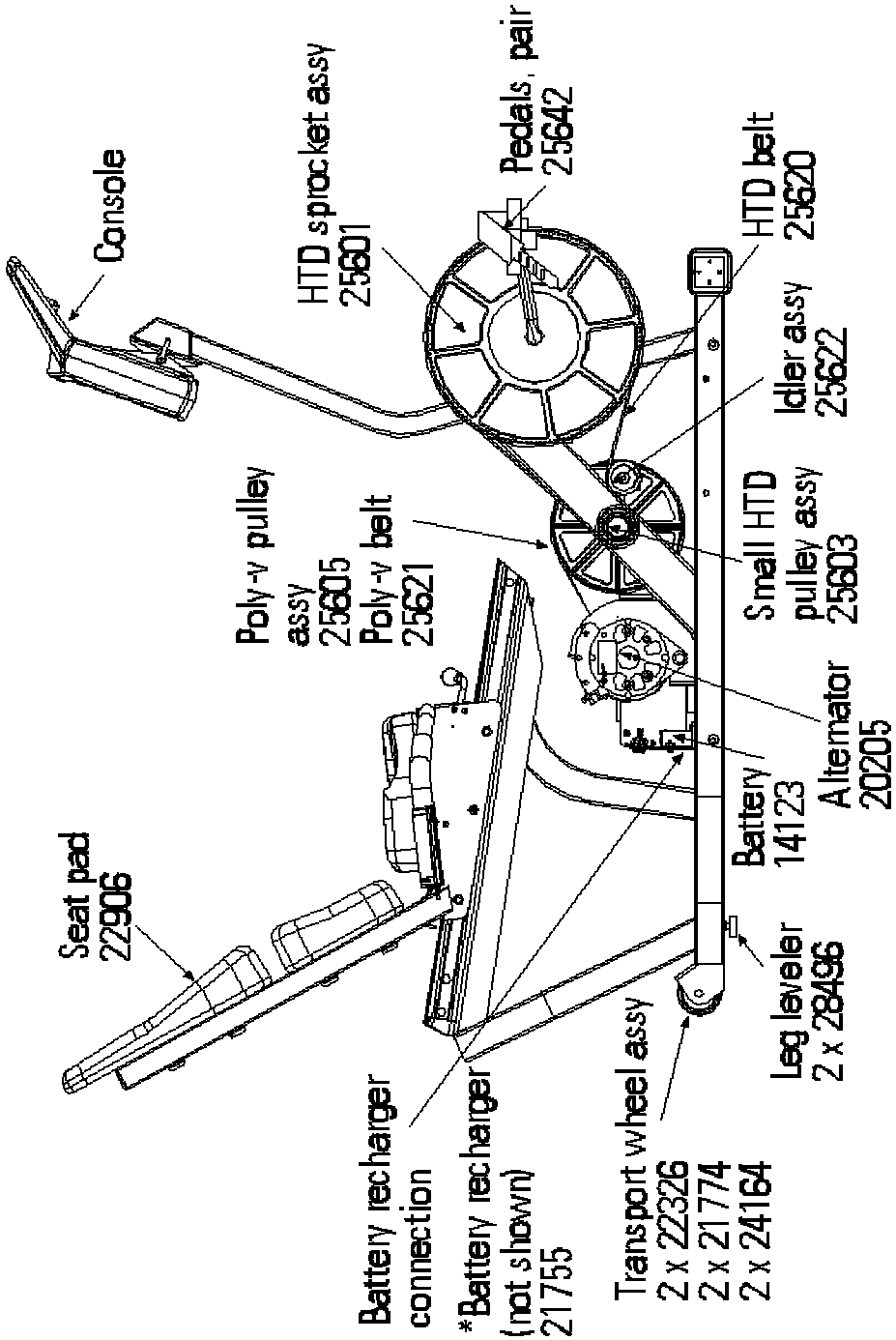

Figure 42: Seat Post Assembly, 3400 CE

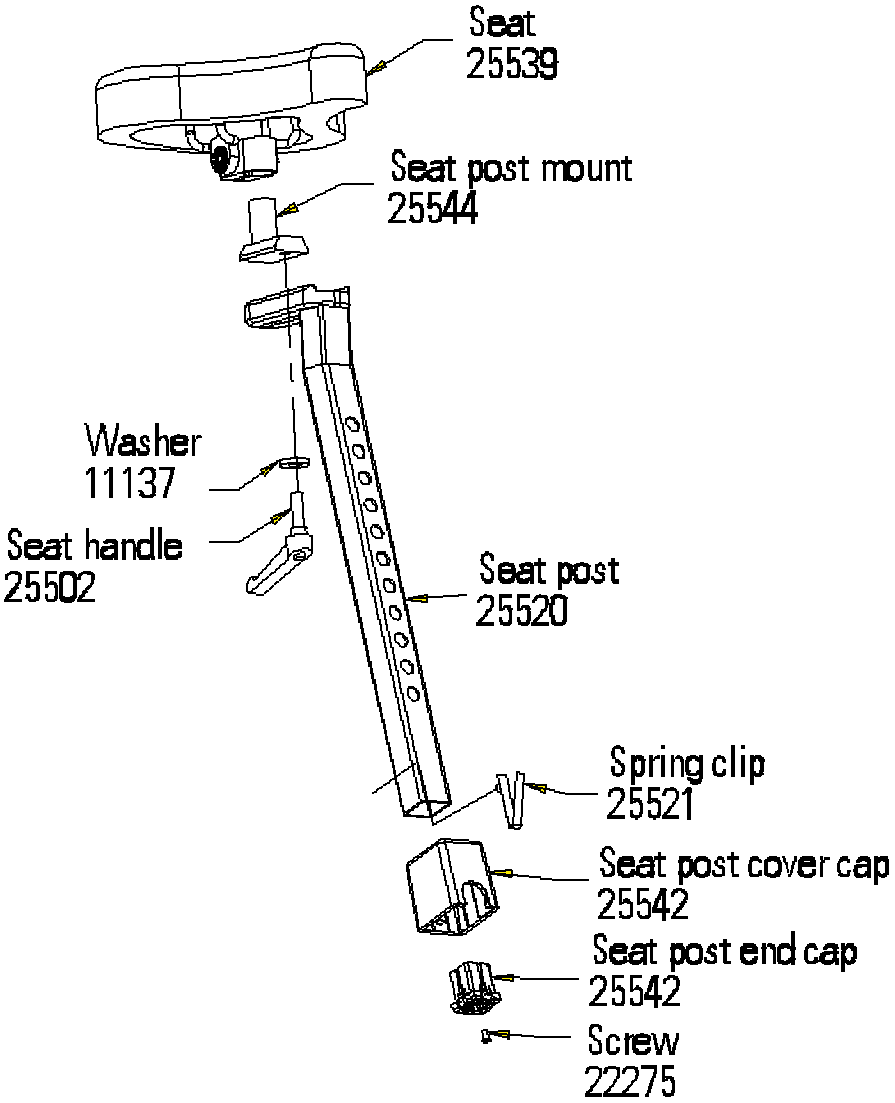

Figure 43: Seat Assembly, 3800 RC

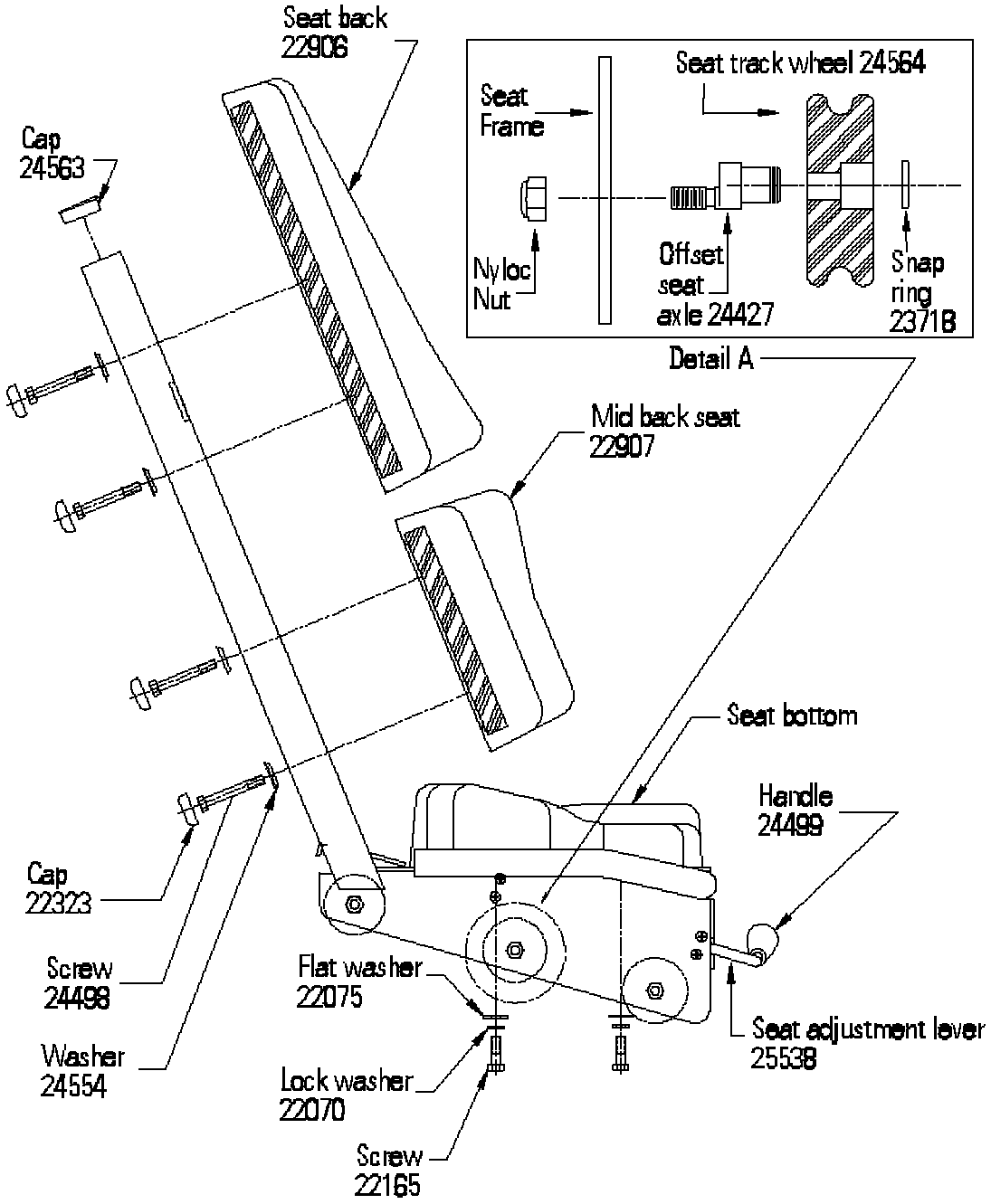

Figure 44: Seat Track Assembly, 3800 RC

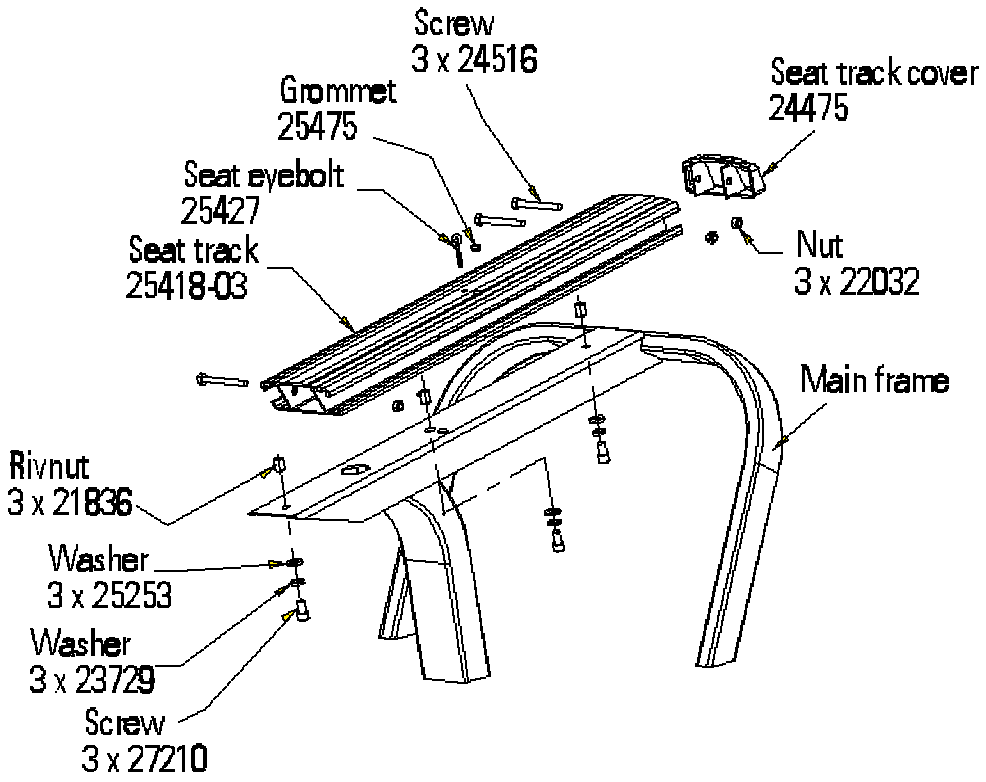

Figure 45: Intermediate Poly-V Assembly

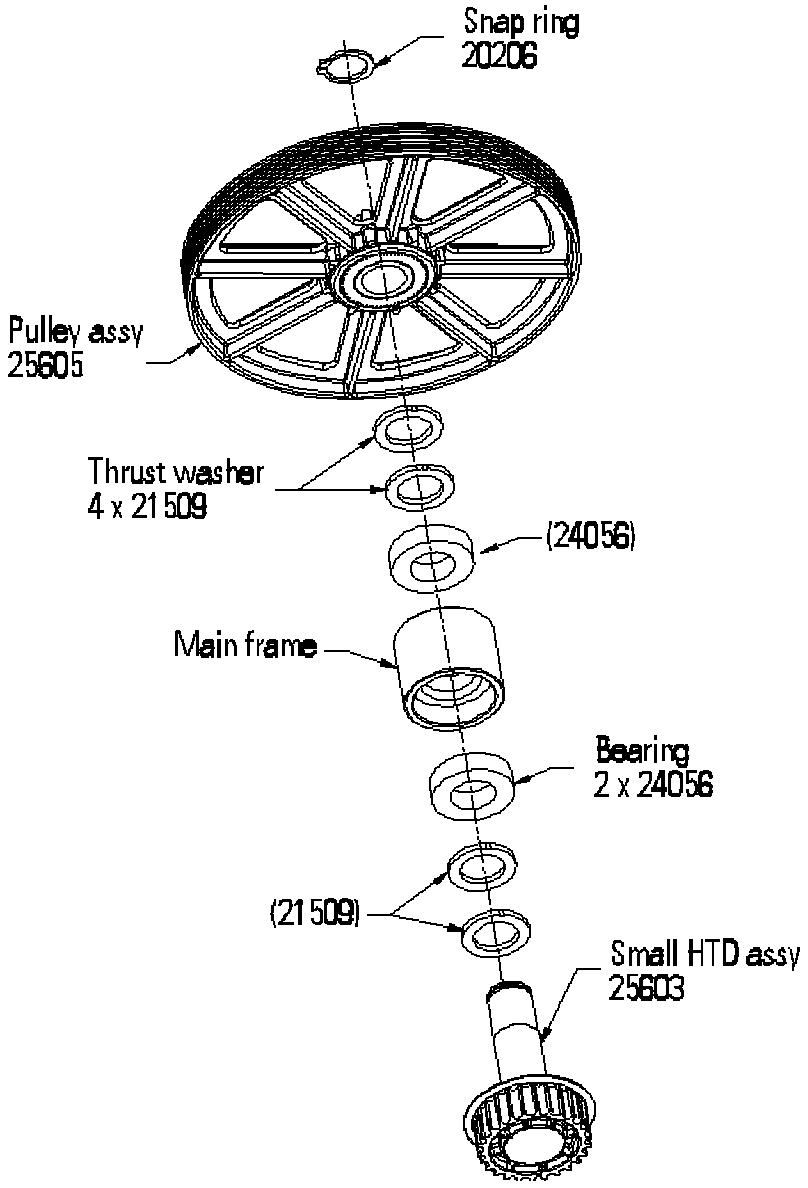

Figure 46: Crank Assembly

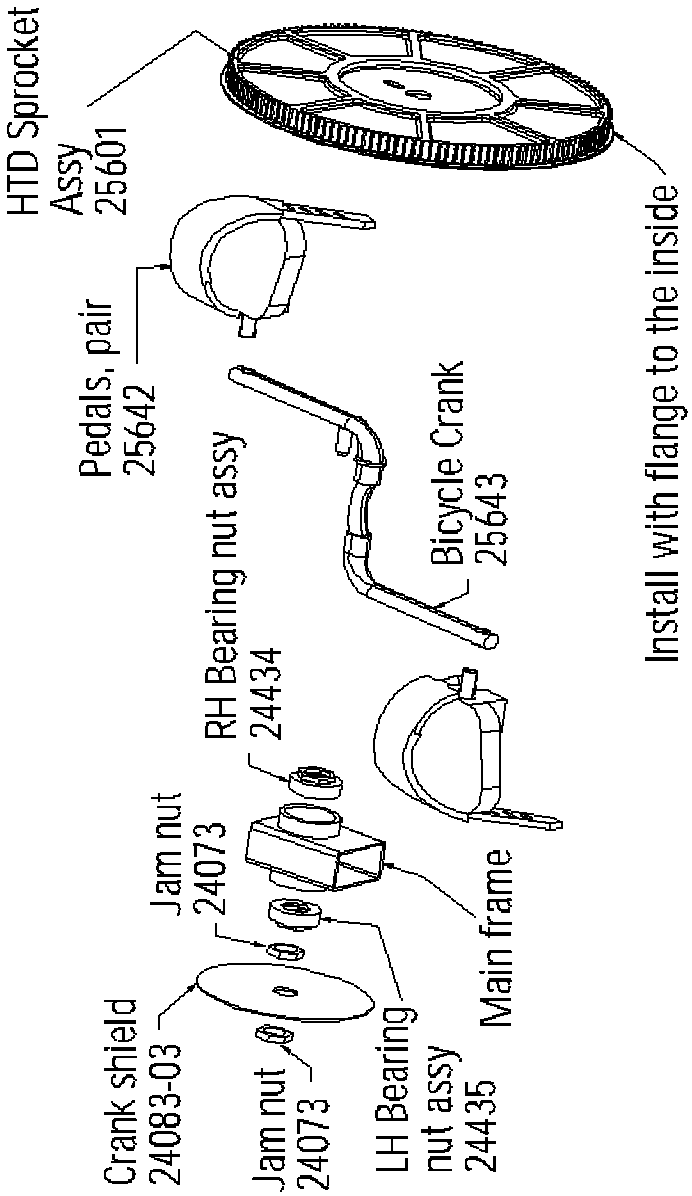

Figure 47: Alternator/Flywheel Assembly

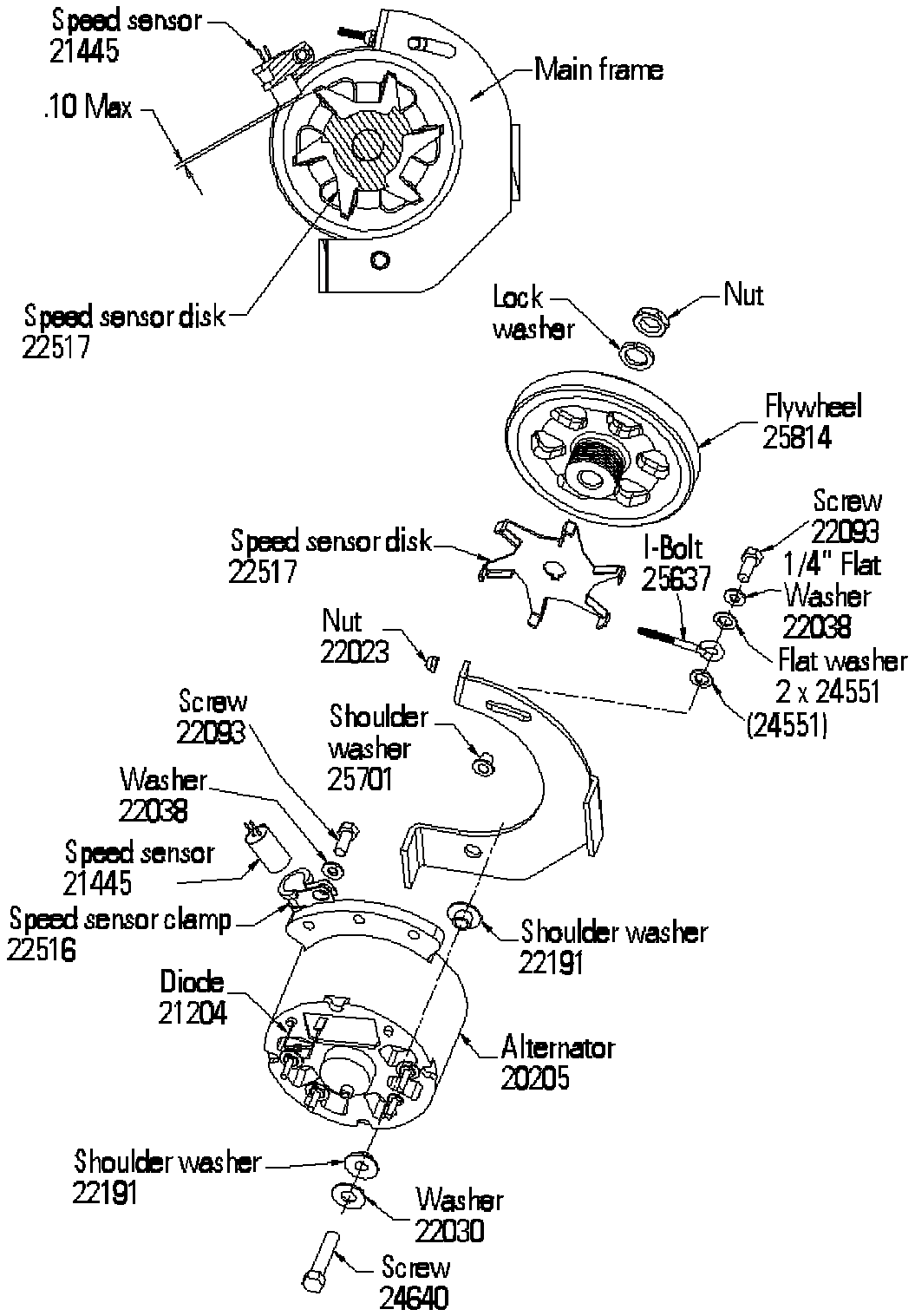

Figure 48: Wire Connections

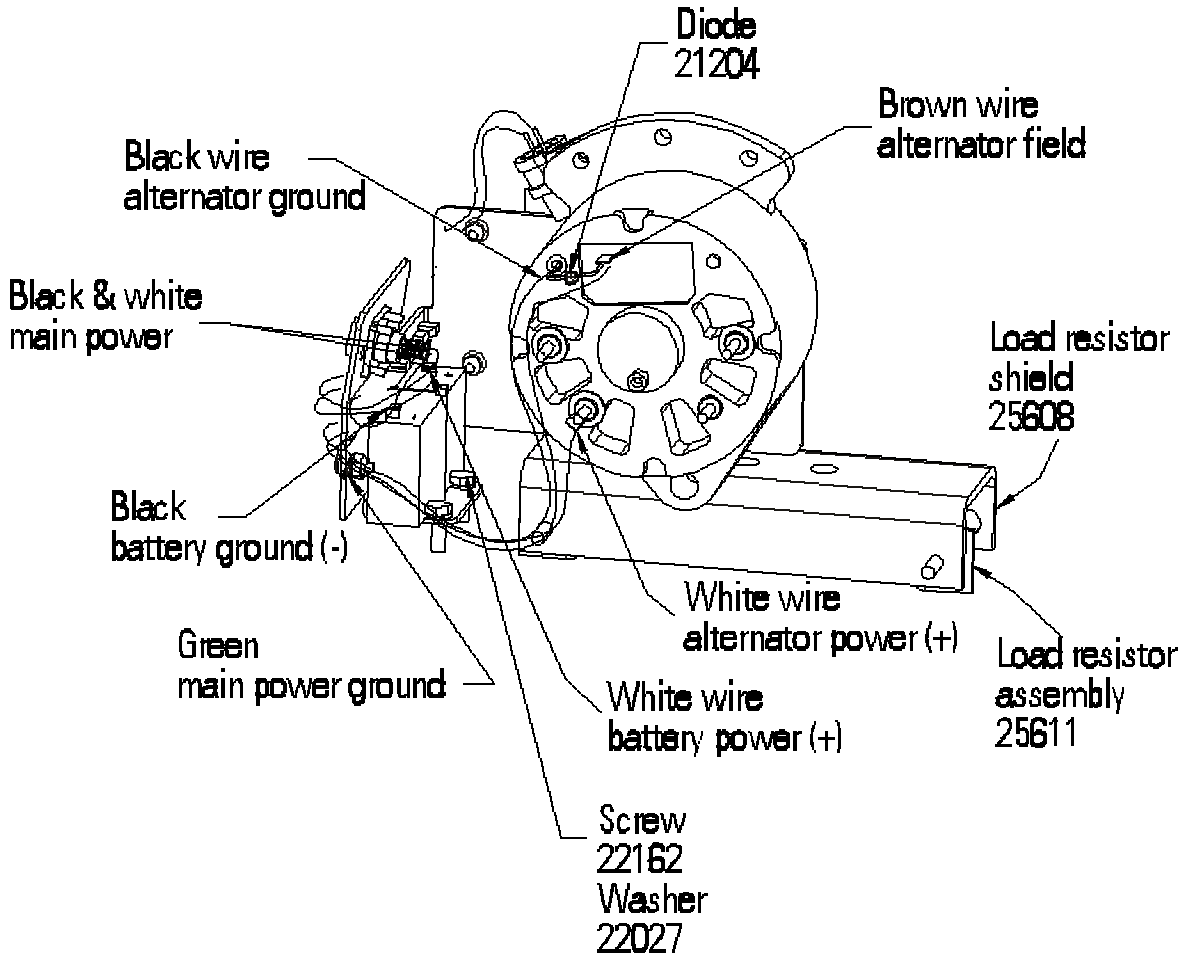

Figure 49: Power Control Board Plug Ins

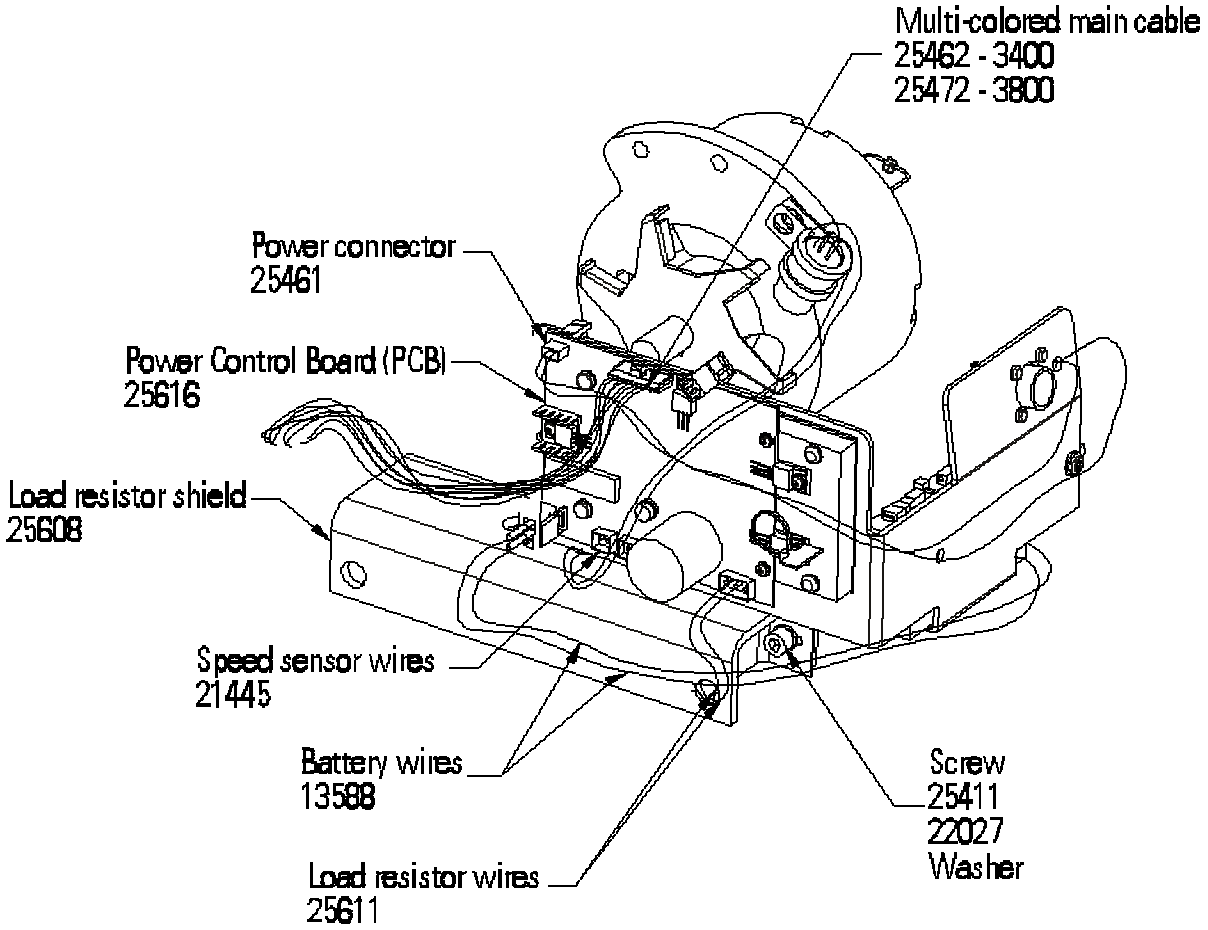

Figure 50: Wiring Diagram

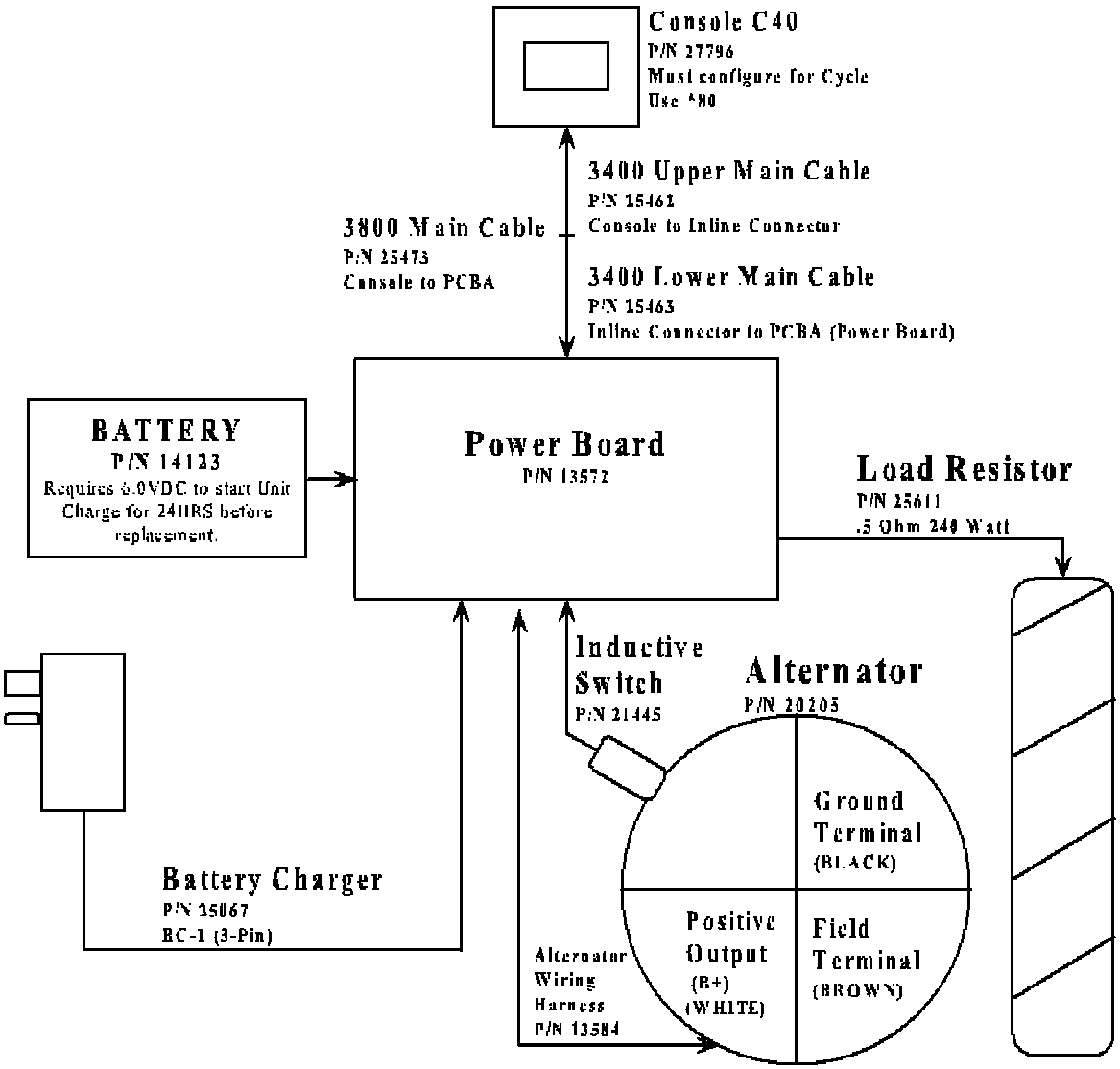

LEMOND® REVMASTER® BIKE

The LeMond RevMaster is a revolutionary new group exercise stationary cycle from StairMaster that delivers an extraordinary workout. It has been designed to be stronger, more stable, feel more comfortable, be easier to adjust, and have a more durable crank system then conventional group exercise bikes.

The LeMond RevMaster bike was designed by Greg LeMond, Paul Swift, and the StairMaster Team. Greg LeMond is the first American to win the Tour de France, and the only American to ever win it three times. A cyclist who has won the world's most challenging races, Greg LeMond has also revolutionized the sport by introducing cutting edge technology that is commonplace today. Paul Swift is a 15-year member of the USA cycling team, eight-time national champion and 1998 Goodwill Games Gold Medalist.

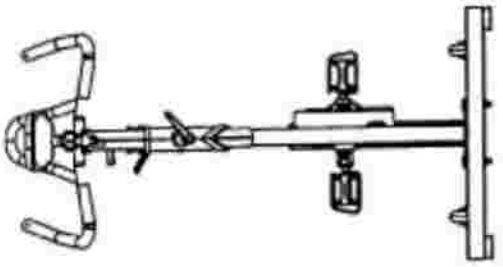

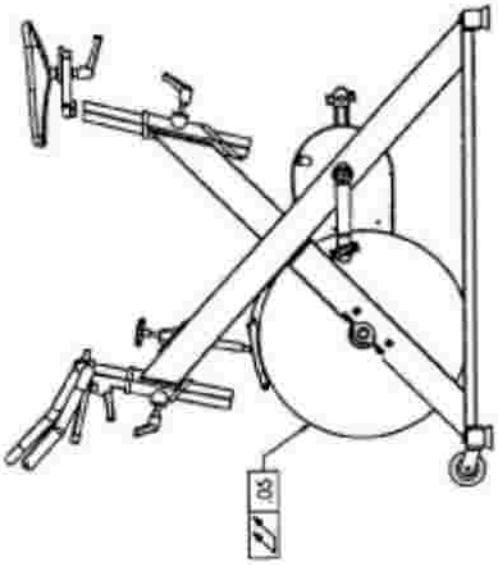
.05

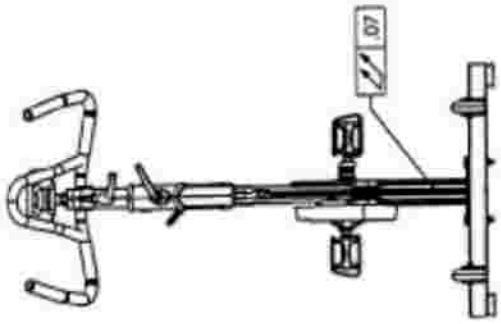
.07

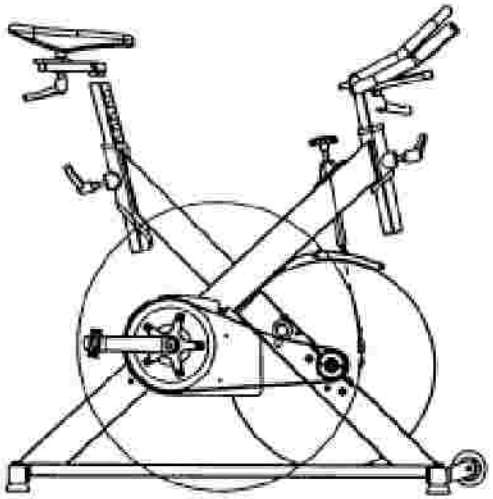

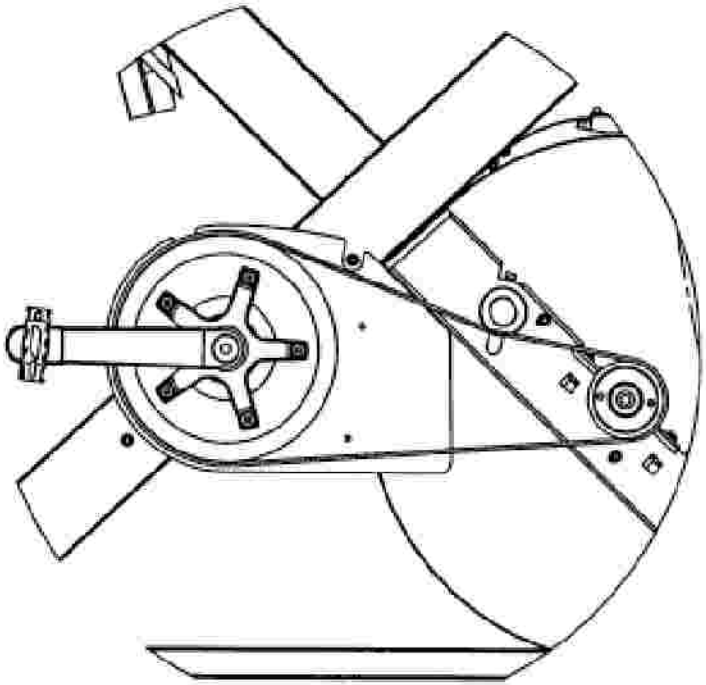

DETAIL B
SCALE 1 : 2

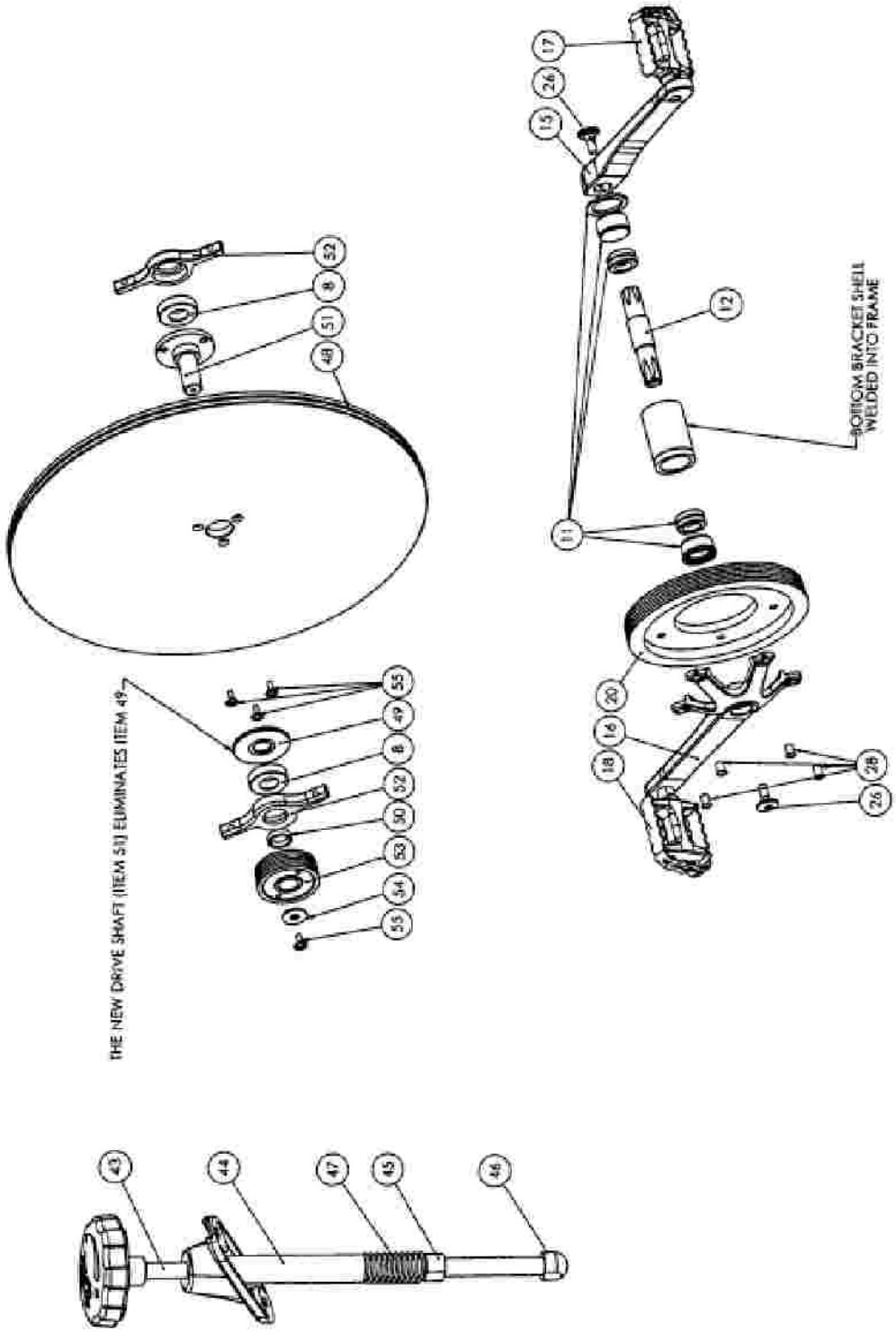
THE NEW DRIVE SHAFT (ITEM 51) ELIMINATES ITEM 49
BOTTOM BRACKET SHELL WELDED INTO FRAME
52
8
51
49
55
49
8
52
50
53
54
55
17
26
15
12
11
20
16
18
28
26
43
44
47
45
46

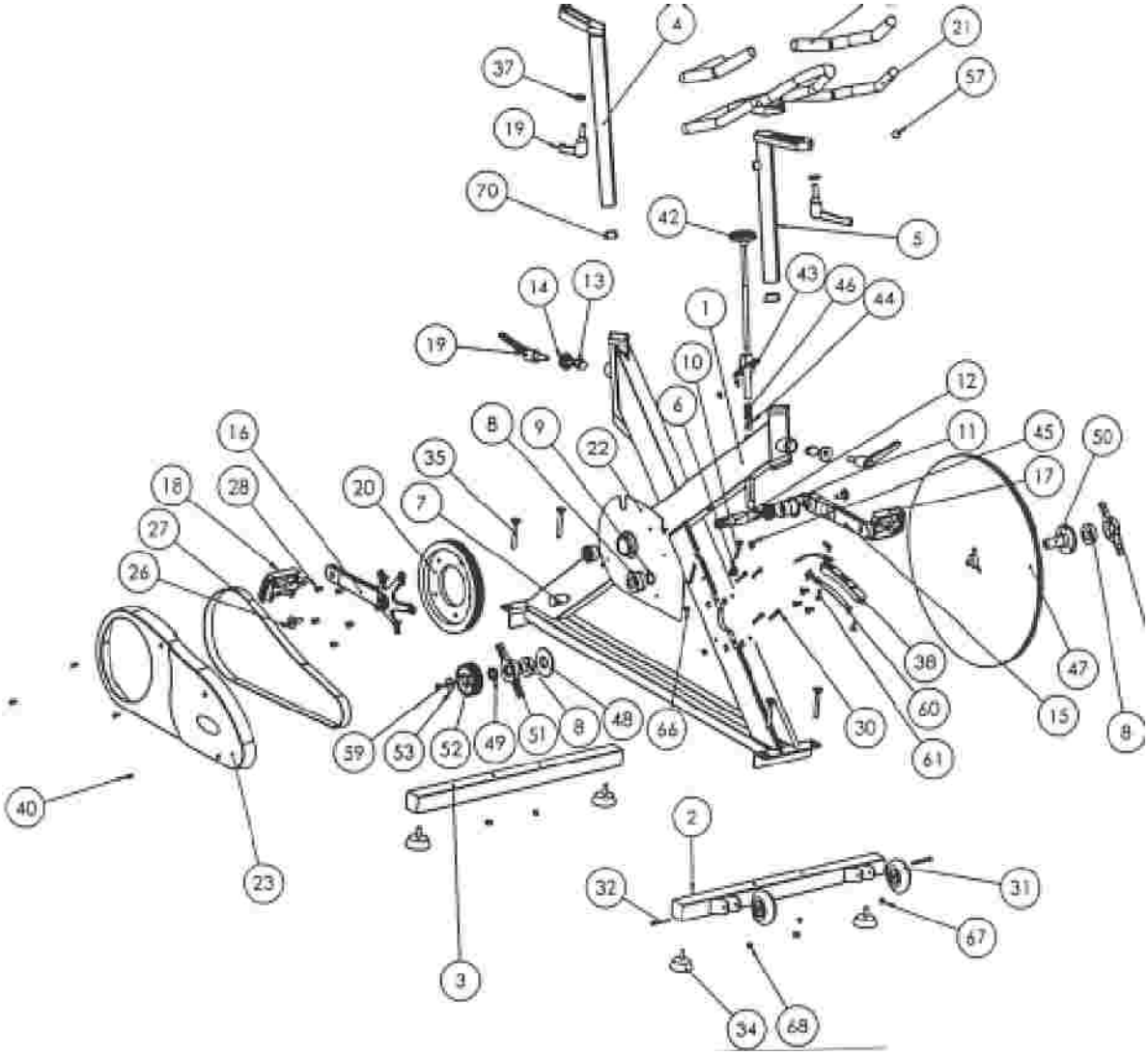
4
21
37
57
19
70
42
5
14
13
43
46
44
1
19
10
12
6
8
9
22
11
45
50
16
35
17
18
28
20
7
27
26
38
47
60
15
8
59
53
52
49
51
8
48
66
30
61
40
2
23
32
31
67
3
34
68

PART #	PART DESCRIPTION	PRICE	QTY	REF#	Rev/Change
35000	**REVMASTER FINAL ASSEMBLY**				
11185	ASSY, BOTTOM BRACKET, STAINLESS	$34.00	1	11, 12	
11179	ASSEMBLY, BRAKE PAD HOLDER	$21.00	1		
11224	ASSEMBLY, BRAKE TENSION KNOB	$12.30	1	44	
11211	ASSEMBLY, HANDEL BAR	NOLP	1		
11208	ASSEMBLY, HANDELBAR POST	$35.84	1	5	
11204	ASSEMBLY, HANDELBAR POST, EXTRA TALL				
11210	ASSEMBLY, PILLOW BLOCK BEARING W/11180 BEARING	$14.95	2	8, 51	
11202	ASSEMBLY, SEAT POST	$43.75	1	4	
11203	ASSEMBLY, SEAT POST, EXTRA TALL				
11189	ASSEMBLY, WELDMENT, HANDLEBAR	$59.00	1	21	
11183	ASSEMBLY, WHEEL (WITH BEARING)	$2.40	2	31	
11180	BEARING, TENSIONER, 600422	$6.30	2	8	
11184	BELT, POLY-V #PK1180 (REV B)	$16.95	1	27	
11186	BOLT M6 X 40, STAINLESS (BELT TENSIONER)	$1.00	1	10	
11171	BOLT M8X10 (ROUND HEAD SOCKET)	$0.50		40	
11226	BOLT, BRAKE PAD, M6X20	NO LP			
11169	BOLT M8X45 STAINLESS (WHEEL)	$0.50	2	32	
11167	BOLT M8 X 55, FLAT HEAD SOCKET, STAINLESS (LEG SCREWS)	$1.00	4	35	
11165	BOLT, CHAINRING, STAINLESS	$6.40	5	28	
11135	BOLT, IDLER (TENSIONER, SHOLDER BOLT)	$5.40	1	7	
11195	BOLT, M8X30, (CRANK ARM)	$1.00	2	26	
11197	CAP, END, HANDLEBAR	$32.27	2	57	
11132	COVER, BACK	$2.70	1	22	
11131	COVER, FRONT (DRIVE BELT)	$11.30	1	23	
11133	COVER, PLUG (HANDLE, FRONT AND REAR)	$5.70	2	14	
11152	CRANK ARM, LEFT, STAINLESS	$25.00	1	15	
11151	CRANK ARM, RIGHT, STAINLESS	$49.00	1	16	
11193	DECAL SET, REVMASTER	$3.86	1		
11122	DRIVE SHAFT, SPLINED	$16.95	1	51	
11120	FLYWHEEL	$89.00	1	47	
11182	FOOT, ADJUSTABLE	$0.60	4	34	
11176	HANDLE	$2.30	4	19	
11158	HANDLE BAR GRIP, RUBBER	$6.95	2	55	
11237	KIT, TOOL (4MM ALLEN, 5MM ALLEN, 13MM COMBO WRENCH)				
11227	KIT, HARDWARE	$40.00			
11240	KIT, REPAIR, HARDWARE (C) 11251, 11252				
40216	KIT, SEAT SLIDER	$40.00			
11188	KIT, TOOL (SERVICE)	$75.25			
11231	KIT, TOOL, CRANK				
11196	KIT, TOOL, SERVICE (SHIPPED WITH BIKE)	$1.00			
11149	LOGO, STAIRMASTER	$3.86	2		
11101	MANUAL, ENGLISH	$12.88	1		
11170	NUT M6	$1.00		41	
11172	NUT M8	$0.18	4	59	
11140	NUT, NYLON	$1.04	1	46	
11142	NUT, SQUARE (DD/FLAT SIDES FOR SLOT)	$1.93	1	6	
11166	NUT, SQUARE, M6 (FOR PILLOWBLOCK SCREWS)	$1.00	4	33	
11162	PEDALS, BICYCLE , W/ TOE CLIP AND STRAP , PAIR	$17.40	1	17, 18	
11192	PLUG, TUBE, PLASTIC	$1.54	2	70	
11134	PLUNGER	$1.40	2	13	
11123	PULLEY, DRIVE (CHAIN RING)	$36.95	1	20	
11119	PULLEY, DRIVE, FLYWHEEL	$13.95	1	52	
11181	SCREW, SELF TAPPING, M4X20 (BACK OF CHAIN COVER)	$0.50	2		
11163	SCREW, M8X10 FLAT HEAD SOCKET, STAINLESS (FLY WH HUB)		3	55	
11171	SCREW, M8X10, ROUND HEAD SOCKET STAINLESS (CHAIN	$0.50	6	40	
	SCREW, M8X15, FLAT HEAD SOCKET STAINLESS (BRAKE PAD		2	61	
11174	SCREW, M8X35, ROUND HEAD SOCKET , STAINLESS	$1.00	4		
11190	SCREW, M8X45, ROUND HEAD SOCKET , STAINLESS (TENSIONE	$0.50	1	10	
11127	SEAT POST SLIDER	$10.00	1	24	
11201	SEAT, AFTERMARKET (WIDER WITH MORE PADDING)	$30.00		25	
11157	SEAT, BIKE	$30.00	1	25	
11154	SPACER B, FRONT WHEEL	$1.00		50	
11155	SPACER C, FRONT WHEEL	$1.00		54	
11150	SPINDLE, BOTTOM BRACKET	$17.40	1	12	
	TOOL, LOCK RING REMOVAL, REVMASTER (PART OF11231 KIT)				
11225	TOOL, HUB REMOVAL, SM	12.22			
62457	TOOL, PEDAL WRENCH, PARK PW-3	$44.10			
PARK HCW1	TOOL, LOCK RING REMOVAL, PARK HCW13 (AVAILABLE FROM	$14.99			
PARK CCP-2	TOOL, BICYCLE CRANK ARM PULLER, PARK CCP-2,	$14.99			
PARK BBT-2	TOOL, BOTTOM BRACKET, PARK BBT-2 /CARTRIDGE STYLE	$14.99			
PARK BBT-7	TOOL, BOTTOM BRACKET LOCKRING WRENCH	$19.99			
11143	WASHER, BEARING SPACER	$1.00	1	9	
11137	WASHER, BRASS	$0.50	2	37	
11194	WASHER, IDLER, PULLEY	$2.88	1		
11159	WATERBOTTLE HOLDER	$7.90	1		
11160	WELDMENT, FRONT LEG	$16.80	1	2	
11187	WELDMENT, REAR LEG	$14.50	1	3	

Tools Required:

- Lock Ring Removal Tool
- 4 mm & 8 mm Hex Key
- Bottom Bracket Removal Tool
- Multipurpose Grease
- ½" Socket Drive
- Philips Screwdriver
- Torque Wrench (foot/lbs)
- Loctite® 242 (blue)
- Adjustable Wrench
- Lock Ring Removal Tool

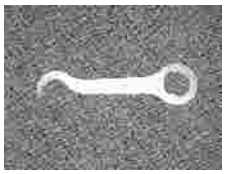

- Bicycle Crank Arm Puller

- Shimano®-compatible Bottom Bracket Tool (cartridge style)

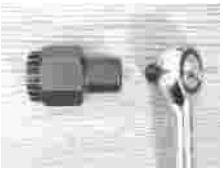

Procedure:

I. Remove the Cover and Belt

1. Remove right side cover. Use the 4-mm hex key to remove the four mounting screws on the right side cover. Use a philips screwdriver to remove the two philips screws on the left side cover. Lift the right side cover over the right pedal arm and remove it from the frame.
2. Use a 4-mm hex key to loosen the tension adjustment screw located on top of the idler pulley. Loosen the idler pulley nut with an adjustable wrench. Slide the idler pulley up.
3. Remove the belt from the forward and rear pulleys.

II. Remove each Crank Arm

1. Use an 8-mm hex key to remove the pedal crank bolt.
2. Thread a bicycle crank arm puller onto the crank arm shaft.

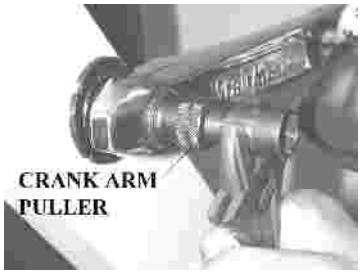

3. As you tighten the crank arm puller on the shaft, the crank arm will pull off the crank arm shaft. Remove the crank arm from the frame.

III. Inspect the Bottom Bracket Assembly for Looseness.

1. Loosen the lock ring on the left side of the bike using a lock ring removal tool.
2. Ensure that the right bearing cup is tight. If necessary, tighten with the bottom bracket tool. ***Note: the right bearing cup is reverse threaded!***
3. Check the left bearing cup. If the bearing cup is loose, tighten with your fingers. Use the bottom bracket tool to tighten the bearing cup – rotate the bottom bracket tool an additional 10 degrees clockwise.
4. Verify that the bottom bracket spindle is not loose by tugging on the spindle shaft.
5. Use the lock ring removal tool to tighten the lock ring. ***Note: Prevent the left bearing cup from spinning by stabilizing it with the bottom bracket removal tool.***

IV. Reassemble the bike.

1. Apply a thin coat of grease on the left bottom bracket shaft and install the left crank arm on the bottom bracket shaft. ***Note: use a rubber mallet to tap the arm onto the bottom bracket spindle.***
2. Apply 1-2 drops of Locktite® 242 on the left crank arm bolt threads. Install the crank arm bolt and tighten to secure the crank arm. Rotate the pedals a few revolutions and then tighten the crank arm bolt again to ensure that the crank arm is tightened to 29.5 foot/lbs.
3. Apply a thin coat of grease on the right bottom bracket shaft and install the right crank arm on the bottom bracket shaft. Align the right crank arm 180° from the left crank arm and push the crank arm on to the crank arm shaft.
4. Apply 1-2 drops of Locktite 242 on the right crank arm bolt threads. Install the crank arm bolt and tighten to secure the crank arm. Rotate the pedals a few revolutions and then tighten the crank arm bolt again to ensure that the crank arm is tightened to 29.5 foot/lbs.
5. Install the belt. Test the belt tension by standing on the pedals with the pedals horizontal to the floor. Pedal quickly and see if the belt slips. A *minimum* of slipping is okay, it is important not to overtighten the belt.

Note: If you have difficulty keeping the idler pulley aligned remove the tension adjustment screw and idler pulley from the frame. Slide the idler pulley mounting screw all the way up in the frame. Install the belt and reinstall the idler pulley nut. Tighten the tension adjustment screw. Tighten the idler pulley nut. The idler pulley should be aligned with the belt.

6. Reinstall the right side cover.

Note: Inspect the pedal crank arm bolts again after 30 hours (approx. one week). If loose, remove the bolts; apply Loctite 242 and reinstall. Tighten the bolts to 29.5 foot/lbs.

STAIRMASTER® SPARES/SERVICE KITS

All kit prices include UPS ground shipping

3000 CE **Spare Parts Kit - 24727** **$65.00**

Part #	Description	Qty Per Kit
24034	Drive Chain	1
22086	Side Panel Rivets	10
22322	Pedals, LH and RH	1 pair
24032	Bearing, 15x28 mm, RH	1
24387	Bearing, 15x35 mm, LH	1

3600 RC **Spare Parts Kit - 24728** **$75.00**

Part #	Description	Qty Per Kit
22029	Wheel hardware, nut	2
22086	Side Panel Rivets	10
22322	Pedals, LH and RH	1 pair
24032	Bearing, 15x28 mm, RH	1
24387	Bearing, 15x35 mm, LH	1
24410	Drive Chain	1
24564	Wheel,Track,Seat,Molded,3600RC	2
24509	Wheel hardware, screw	2
24553	Wheel hardware, spacer	2

Gravitron® 2000 AT **Spare Parts Kit - 24731** **$40.00**

Part #	Description	Qty Per Kit
21631	Trolley Wheels, UHMW	2
22086	Side Panel Rivets	10
22128	Washer,Flat,.312 ID X .526 OD	2
22436	Tether, Weight Stack Pin	1
22997	Weight Stack Pin	1
23015	Snap Ring,External,.312 DIA	2
23060	Cable Assy.	1

1650 LE **Spare Parts Kit - 24732** **$85.00**

Part #	Description	Qty Per Kit
22086	Side Panel Rivets	10
22325	Weight Stack Pin	1
22436	Tether, Weight Stack Pin	1
23319	Pedal Arm Chain	2
23325	Weight Stack Belt,1650LE	1
24391	Decal, Weight Stack Indicator	1

2650 UE **Spare Parts Kit - 24733** **$85.00**

Part #	Description	Qty Per Kit
22086	Side Panel Rivets	10
22325	Weight Stack Pin	1
22344	Weight Stack Belt,2650UE	1
22436	Tether, Weight Stack Pin	1
24391	Decal, Weight Stack Indicator	1
24437	Handgrips	2

7000 PT **Spare Parts Kit - 24729** **$22.00**

Part #	Description	Qty Per Kit
20157	Master Link #40	1
20202	Timing Belt, Poly-V	1
22086	Side Panel Rivets	10
23257	Drive Chain	1

4000 PT® & FreeClimber **Basic Hardware Kit - 21488** **$6.50**

Part #	Description	Qty Per Kit
20008	Master Link #41	1
20157	Master Link #40	1
20206	Snap Ring, Industrial	1
20213	Snap Ring, 3/4"	1
20214	Snap Ring, 3/8"	1
21366	Thrust Washer, Pedal (.63 ID)	4
21462	Flat Washer, 3/8", stainless	2
21463	Snap Ring, stainless	2
22031	Washer, 1/4 Fender	1
22140	Washer, Flat, 1" OD	2
22141	Snap Ring, 5/8", zinc plated	1
22143	Snap Ring, 3/8"	1
22151	Washer, .920 OD x .718ID Wave	1

4000 PT® **SILVER Spare Parts Kit - 10479** **$60.00**

Part #	Description	Qty Per Kit
20199	CHAIN,STEP CHN40N P 37	2
20200	CHAIN, TRANSMISSION	1
20202	BELT,POLY- V	1
21093	SPRING,PEDAL RETURN	2
21298SV	(CS)LINK,DOUBLE PITCH W/SLEEVE	2
21345	BUSHING,CHAIN ANCHOR,PLASTIC	2
21488	Kit, Basic Hardware,4000/44xx	1

4000 PT® **GOLD Spare Parts Kit - 10480** **$135.00**

Part #	Description	Qty Per Kit
10382	(CS)ASSY, SPROCKET LH	1
10383	(CS)ASSY, SPROCKET RH	1
10479	4000PT "Silver" Spare Parts Kit	1
10778	INSTRUCT,BEARING REPLMNT,4000	1
20015	CAP,LEVELING ARM	2
20030	RING,RETAINING,LEVELING ARM	2
20768	CONNECTOR, SPRING CHAIN	1
20769	SLEEVE, BEARING INSERT	3
21094	PULLEY,SPRING, 4000/4400	2

4000PT® **PLATINUM Spare Parts Kit - 10481** **$630.00**

Part #	Description	Qty Per Kit
10480	4000PT "Gold" Spare Parts Kit	1
10920	Console,4000PT,English	1

FreeClimber **SILVER Spare Parts Kit - 24723** **$60.00**

Part #	Description	Qty Per Kit
20199	Step Chain	2
20202	Timing Belt, Poly-V	1
21093	Pedal Return Spring	2
21298SV	DP Master Link with Sleeve, #40	2
21345	Plastic, Chain Anchor Bushing	2
21488	Kit, Basic Hardware,4000/44xx	1
22347	Drive Chain, T2 Units	1

FreeClimber **GOLD Spare Parts Kit - 24724** **$160.00**

Part #	Description	Qty Per Kit
10382	Left Hand Drive Sprocket Assy.	1
10383	Right Hand Drive Sprocket Assy.	1
21519	Spring Pulley, T2 Units	2
24723	FreeClimber "SILVER" Spare Parts Kit	1

FreeClimber **PLATINUM Spare Parts Kit -** **$675.00**

Part #	Description	Qty Per Kit
24724	FreeClimber "GOLD" Spare Parts Kit	1
26039	Console,C4,Climbing Sys, English (44PT)	1

Note: Consoles carry a full 1-year warranty and include all of our latest software features.

THE POPULAR STAIRMASTER® 4000 PT® — THE STAIR FACTS

AVERAGE CLUB USAGE

3,650 Hours/Year
150,562 Auto miles/year
11,497,500 Vertical feet/year
15,330,000 Spring cycles/year
2,673,169 Calories burned/year

The above data is based on average statistics. An average of 10 hours was used because it was the most common time of operation quoted to us. If your use is 8 hours per day, place a decimal before the number and multiply all the totals by .8. Conversely, if you exceed 10 hours of use, say 12 hours, put a decimal between the two digits and factor the totals by 1.2.

Whatever your level of activity, the totals provide an interesting comparison.

AVERAGE USE PER DAY

10 hours x 365 = 3,650 hours/year
Average 8" step x 70 steps per minute or 8.75 METs
8" step = 40 revolutions of alternator
70 SPM = 2,800 RPM of alternator
2,800 RPM = 41.25 MPH in automobile
41.25 MPH x 3,650 hours = 150,562.5 equivalent miles/year

VERTICAL FEET CONVERSION

70 SPM x 8" x 60 min = 3,150 feet/hour
3,150 ft/hr x 10 hours = 31,500 feet/day x 365 = 11,497,500 vertical feet/year
11,497,500 ft/yr/29,028 feet = 396 ascents of Mt. Everest/yr or 396 members cumulative climb Mt. Everest each day

CALORIC EXPENDITURE

At 70 SPM & 8" step, and an average of 70 Kg or 154 lb member, total caloric expenditure for vertical totals are:
732.375 calories/hour x 24 = 7,323.75 calories/day
7,323.75 cal/day = 2,673,168.99 cal/year
3,500 cal/pound of fat = 763.76 pounds/year of metabolized fat
1,600 cal/small pizza = 1,670 pizzas/year

PEDAL RETURN SPRING CONTRACTIONS

70 SPM x 60 Min x 10 hour/day x 365 days = 15,330,000 spring contractions & expansions/year
15,330,000 spring cycles/365 days = 42,000 spring cycles per day

HIGH POINTS OF INTEREST

# OF FEET	OBSTACLE NAME	# OF FLOORS
1822	CN Tower, Toronto	159
1454	Sears Tower, Chicago	110
1362	World Trade Center, New York	106
1250	Empire State Building, New York	102
985	Eiffel Tower, Paris	92
853	Trans-America Building, San Francisco	81
726	Hoover Dam, Nevada	72
630	Gateway Arch, St Louis	63
555	Washington Monument, DC	55
482	Great Pyramid of Cheops, Egypt	45
305	Statue of Liberty, New York	34
273	Superdome, New Orleans	27
179	Leaning Tower of Pisa, Italy	18
157	The Colosseum, Rome	8
39	Great Wall, China	4