TREADMILL NOISE

TROUBLESHOOTING GUIDE

FOR

RETAIL AND IPO TREADMILLS

12/20/2022

JOHNSON HEALTH TECH - TCMT

V1

TABLE OF CONTENTS

INTRODUCTION **3**

INITIAL CHECKLIST 3
COMMON VOCABULARY 4

FLOWCHART **6**

CORRECTIVE ACTIONS **9**

LEVELING THE TREADMILL 10
CHECKING ELEVATION RACK HARDWARE 11
INCLINE MOTOR ADJUSTMENT 12
CENTERING THE RUNNING BELT 13
REMOVING PLASTICS 13
TIGHTENING OR REPLACING ELASTOMERS 14
CLEANING ROLLERS 14
CHECKING THE CONDITION OF THE BELT AND DECK 15
CONTACTING CUSTOMER SUPPORT 16

CHANGE LOG **17**

INTRODUCTION

There are many possible root causes of noise issues on Retail and IPO treadmill models. This document will help diagnose those issues and suggest possible corrective actions – settings, adjustments, or part replacement.

Initial Checklist

Before proceeding, rule out the following:

1. Leveling the treadmill is important for proper operation. Make sure that your treadmill is on a level surface and the leveling feet are engaged properly.

2. Confirm that all hardware and customer assembly points have been tightened properly and the unit was assembled in accordance with the assembly guide.

3. Recent maintenance on the treadmill may provide clues as to the cause of the noise. If a belt, motor, deck, or other component was replaced recently, verify the replaced components are properly installed and the unit is not missing hardware.

4. Inadequate or improper lubrication of the treadmill may also lead to noise issues. Confirm the treadmill has been properly and regularly lubricated. Verify the belt did not become uncentered during the lubrication process. Verify the condition of the belt and deck.

5. When moving the treadmill to a new location there is an opportunity for hardware to become loose because of vibration and stress. Always tighten hardware and level the unit after changing locations.

Common Vocabulary

Here are some diagrams to familiarize yourself with the common vocabulary found inside of this document. All diagrams within this document adhere to this color scheme, if you are unsure what the diagram is displaying, reference against these photos for better understanding.

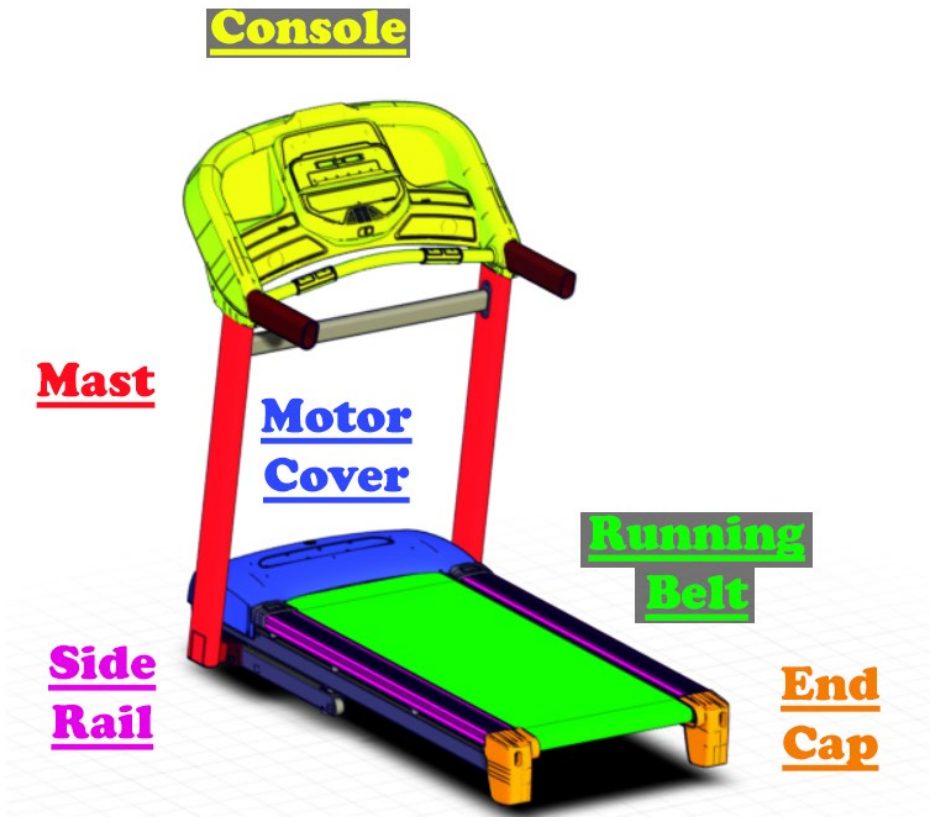

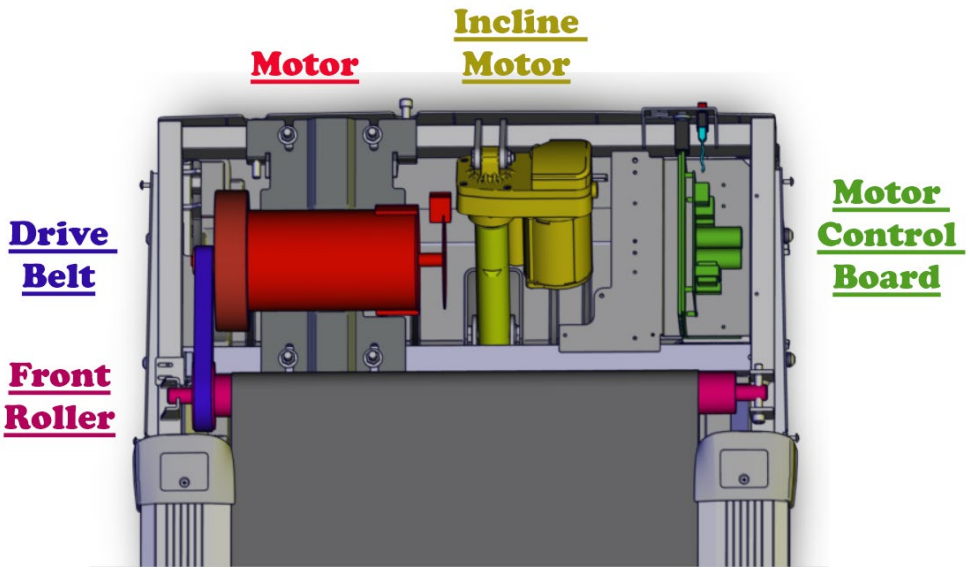

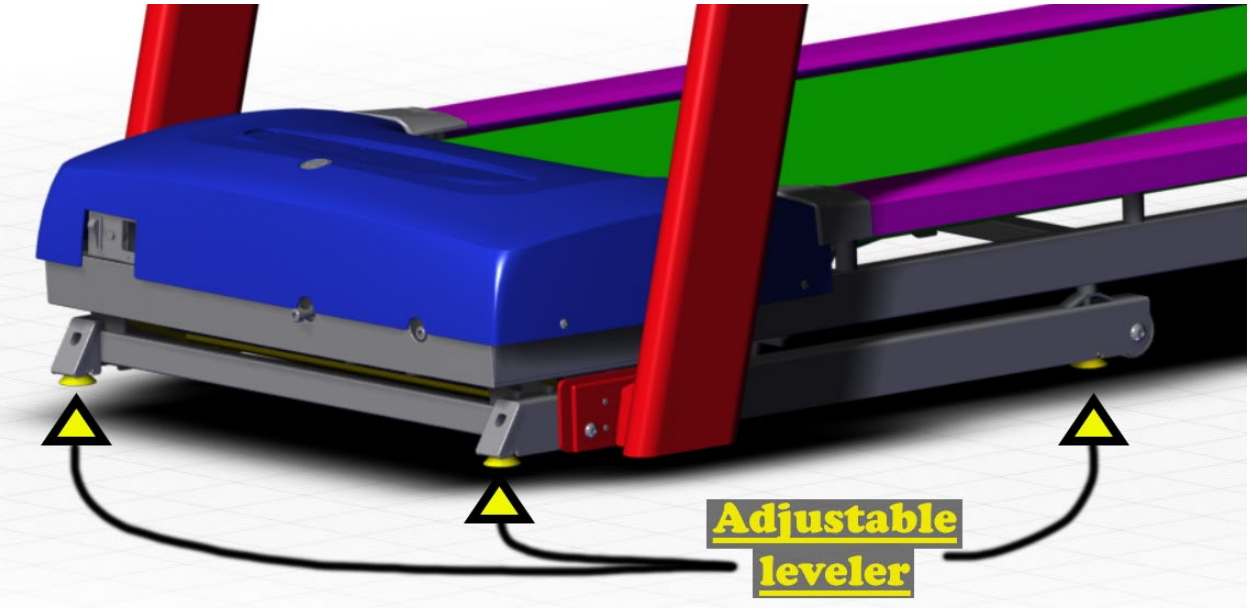
Adjustable
leveler

Flowchart

These flowcharts will help to narrow down possible root causes for the noise issues that may be experienced.

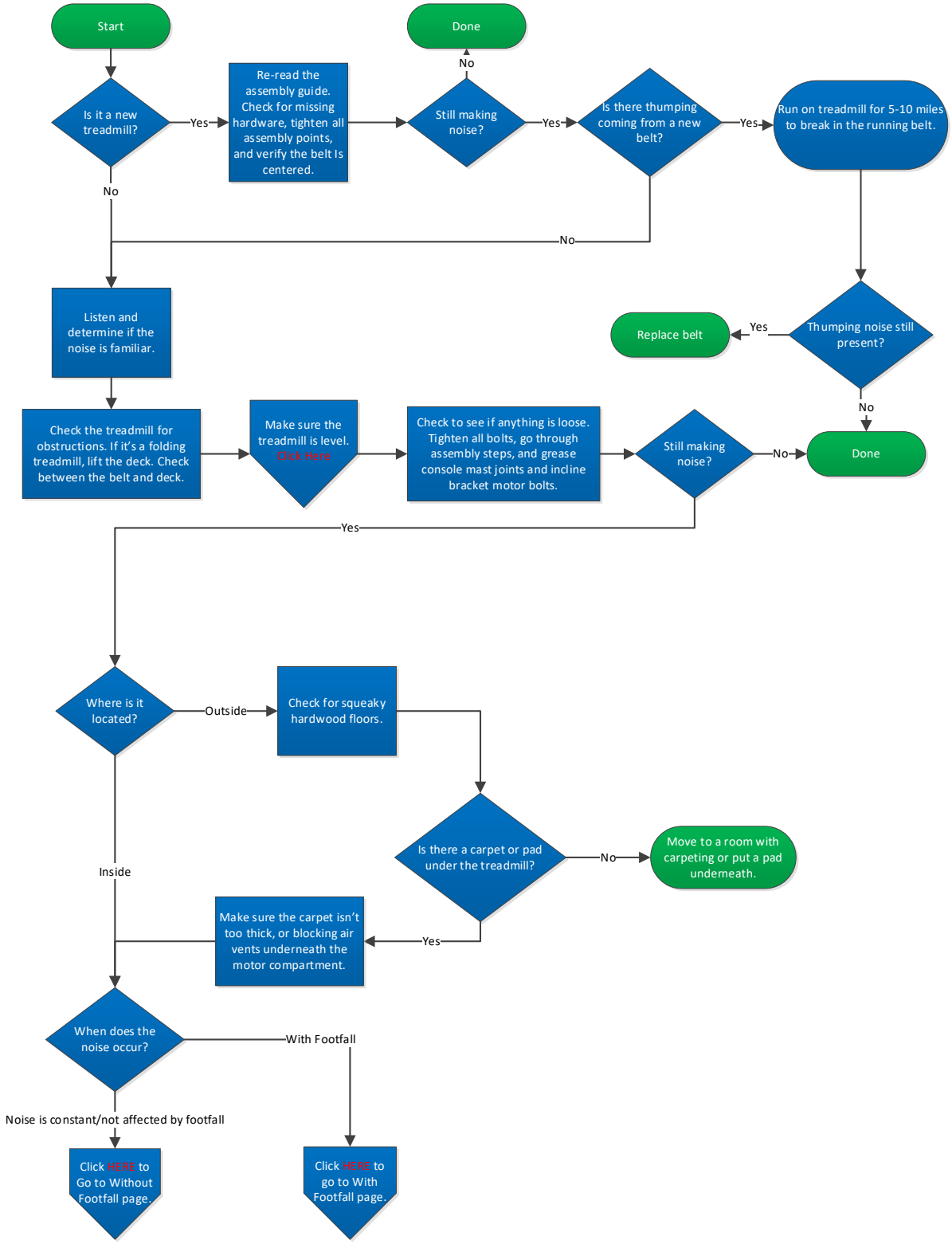

With Footfall

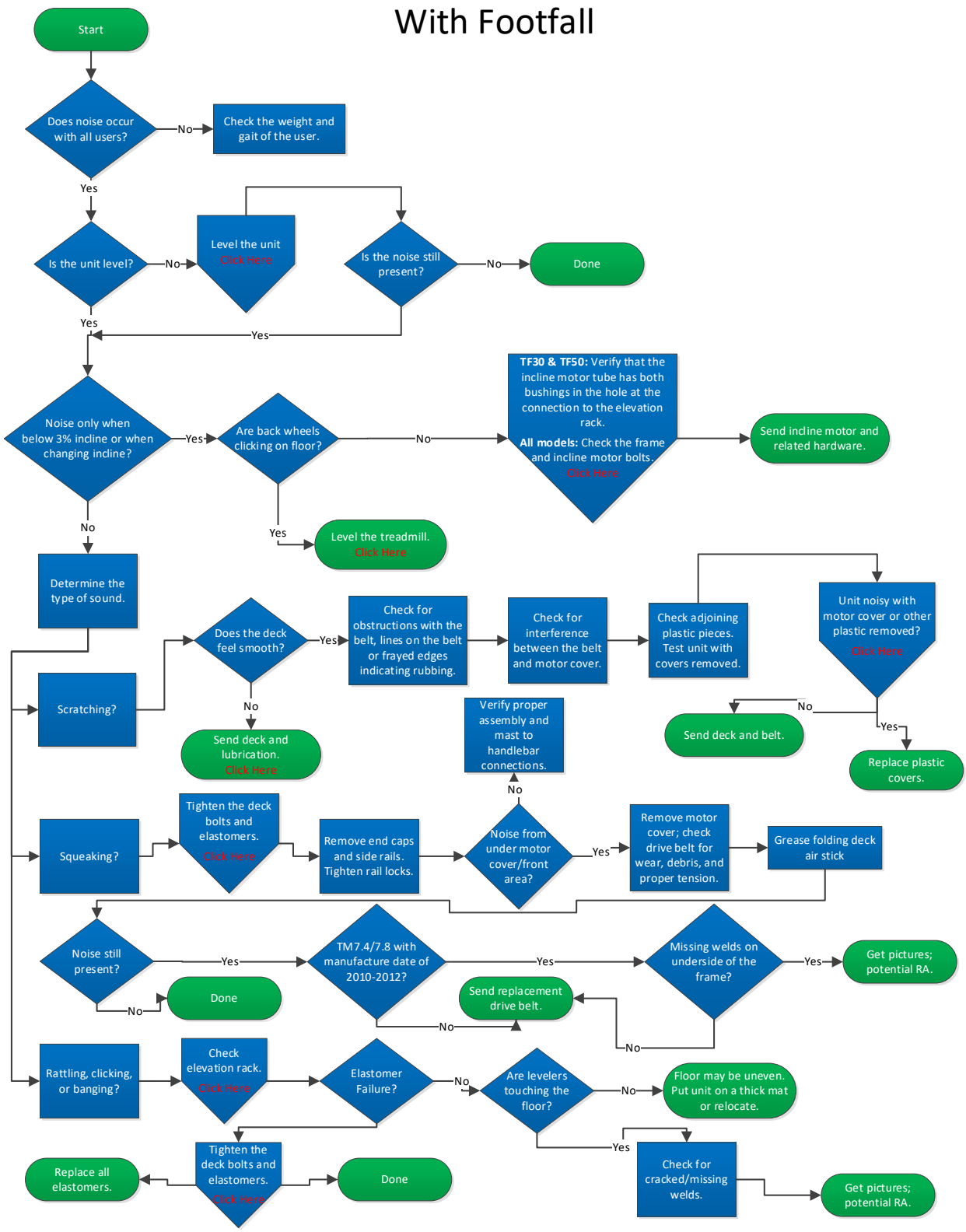

Without Footfall

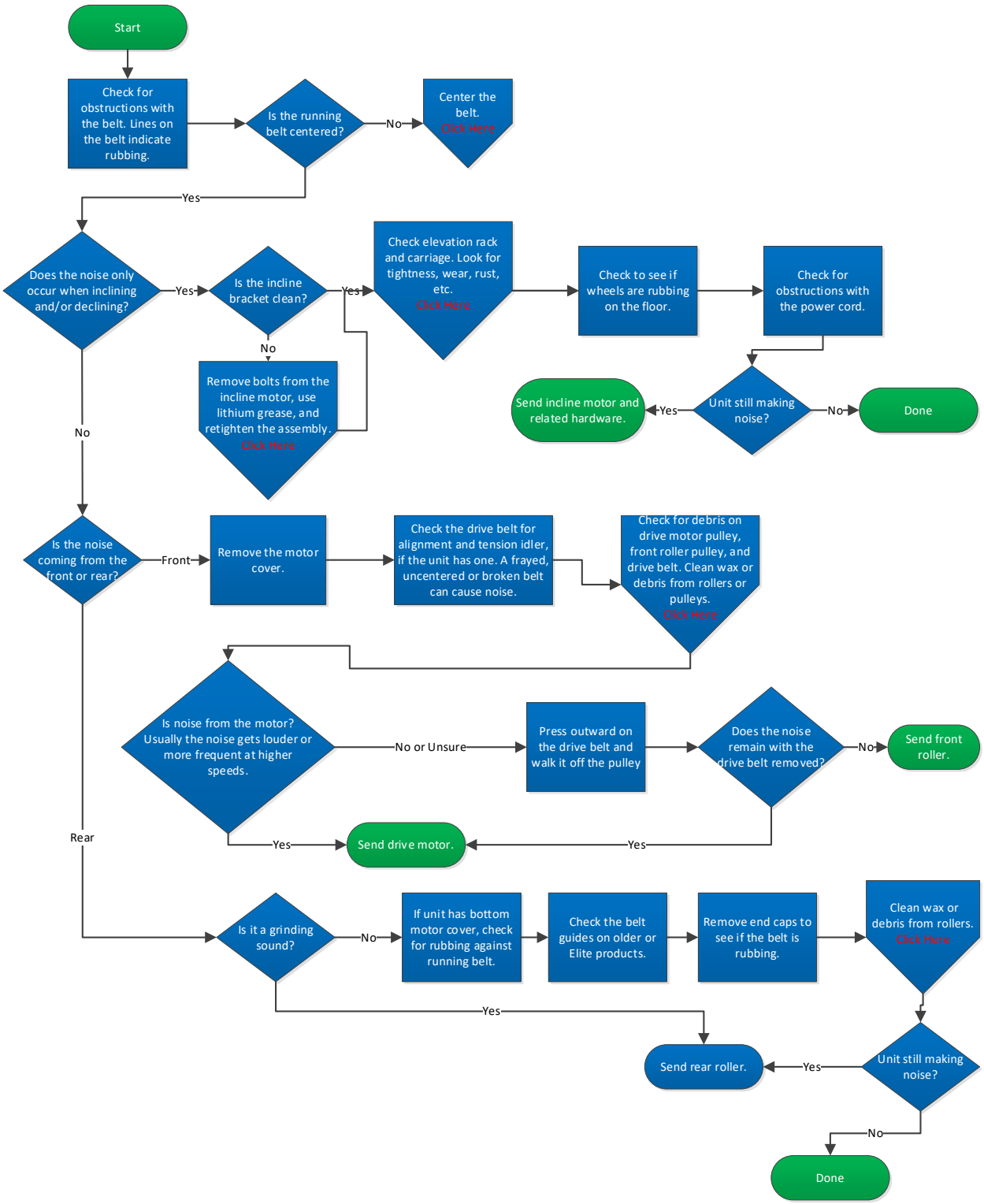

Corrective Actions

A list of possible solutions for noise troubleshooting:

1. LEVELING THE TREADMILL
2. CHECKING ELEVATION RACK HARDWARE
3. INCLINE MOTOR ADJUSTMENT
4. CENTERING THE RUNNING BELT
5. REMOVING PLASTICS
6. TIGHTENING OR REPLACING ELASTOMERS
7. CLEANING ROLLERS
8. CHECKING THE CONDITION OF THE BELT AND DECK
9. CONTACTING CUSTOMER SUPPORT

Leveling The Treadmill

Your treadmill should be level for optimum use. Once you have placed your treadmill where you intend to use it, raise or lower one or both adjustable levelers located on the bottom of the treadmill frame. A carpenter's level is recommended. If your treadmill is not level, the running belt may not track properly. A video showing how to level a treadmill can be found here.

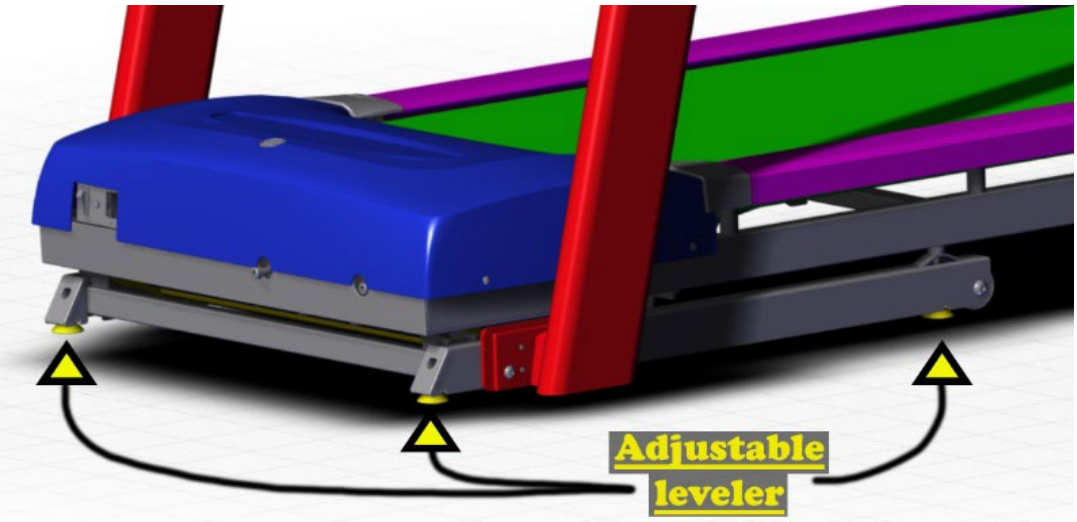

Checking Elevation Rack Hardware

Beneath the motor compartment of the treadmill is the elevation rack. The elevation rack is the frame component that is used in conjunction with the incline motor to increase the incline percentage of the treadmill. Sometimes, the bolts that secure the elevation rack can become loose.

NOTE: For the below models only.

- T101-06 (TM486B)
- T101-07 (TM1020/TM1020B)
- T202-05 (TM492C)
- T202-06 (TM1030/TM1030B)

A design change was made to the elevation rack for the above models. Please check the bulletin **Elevation Rack Screw Design Change** on the Online Remedy page for any of these models to verify the customer has the longer bolts recommended in that bulletin.

This is a diagram of the elevation rack for a T101-05 treadmill, your model may vary slightly.

Tightening Elevation Rack Bolts

Note: This process requires two people

1. Place the unit in the folded and locked position. One person should remain at the back of the treadmill to make sure that the deck remains in the folded position.

2. Tighten the elevation bolts.

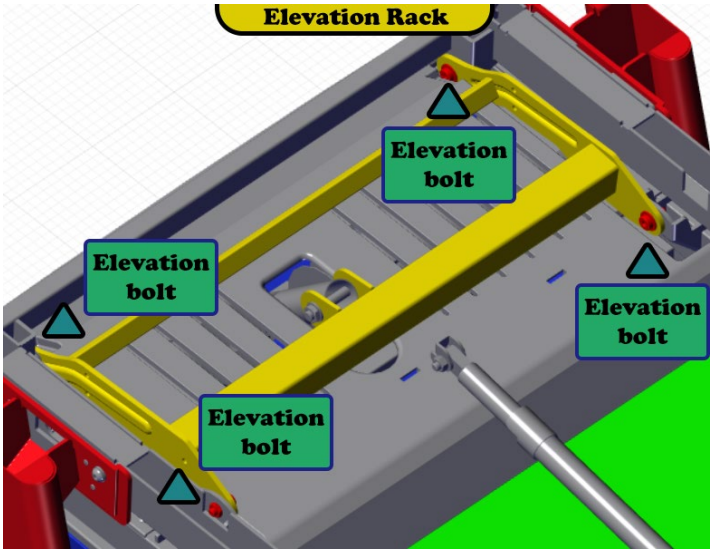

Incline Motor Adjustment

The incline motor when not properly adjusted can cause many different types of noises. Squeaking and clicking are the most common types of noise produced by the incline motor.

Checking the tightness of the hardware and verifying that all components for the incline motor are present will help to rule out this as a source of noise.

How to check the incline motor

1. Disconnect the unit from power and remove the motor cover.

2. Hand tighten the top bolt and check hardware, make sure the number and type of washers are correct. Apply a small dab of lithium-based grease to the bolt and frame connection cavities. Customers in the United States can view full diagrams by model to verify their hardware is correct at https://parts.horizonfitness.com/.

3. Accessing the bottom bolt should only be done by placing the unit in the folded position and requires two people. One person should hold the deck and belt in the folded position when working underneath the treadmill. NEVER place the unit on its side, as the gas shocks can activate with substantial force. Follow step 2 for the bottom bolt.

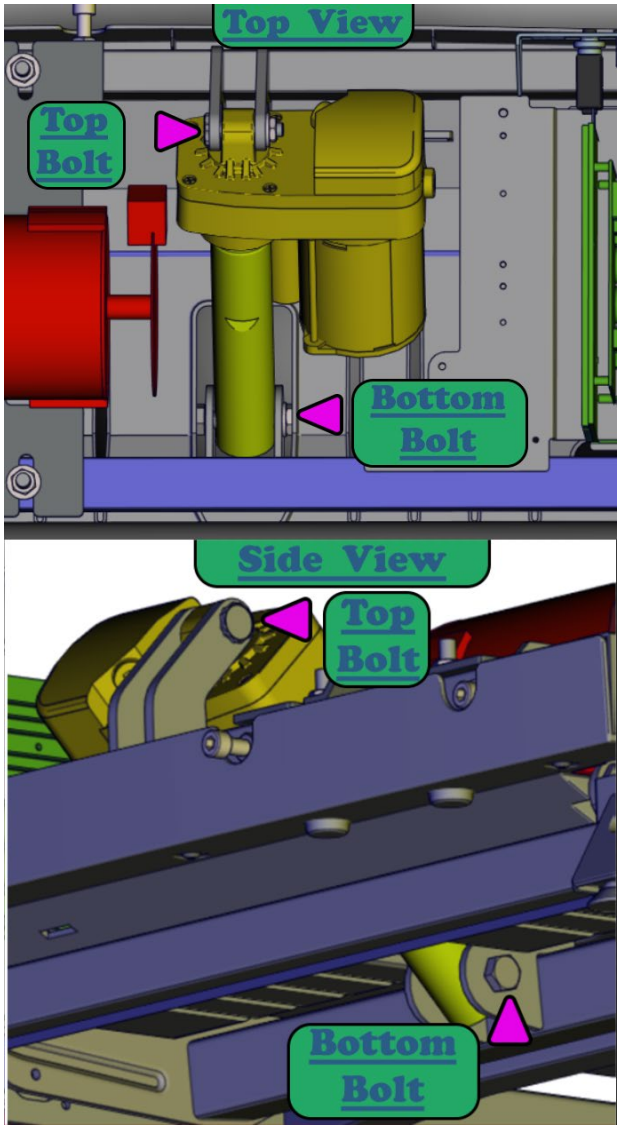

A video showing this process can be found here. (This is a full replacement video, only the access (1:49-2:01) and tightening (3:50-4:16) steps need to be followed)

Centering the Running Belt

An uncentered belt can cause problems on any treadmill. If the belt does not have equal spacing on both sides, makes a rubbing noise, or is developing wear unevenly on one side – the belt is likely uncentered. This most often occurs after lubricating the belt. The diagram to the right shows how to adjust the rear roller through the end cap. Make small adjustments of half and quarter turns.

Procedure

1. Press Go on the treadmill and adjust speed to 2mph/3.2kph.

2. Move/adjust the belt by turning the roller bolts clockwise or counterclockwise as shown in the diagram above. Make only small quarter and half turns, large adjustments are typically unnecessary.

3. Watch the belt move to the center of the deck.

4. Repeat until belt is centered on the deck

A video of this process can be found here. This video shows an entire belt and deck replacement.

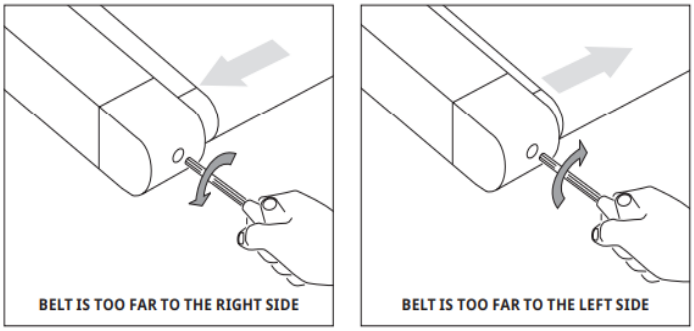

Removing Plastics

Plastics can be the cause of many different noise issues. Remove all plastic pieces that are in contact with moving parts of the treadmill. This includes motor covers, end caps, side rails, and any other plastic pieces that may be present. If the noise ceases after the removal of the plastics, slowly reinstall the plastics one at a time to determine which part is causing the issue, then replace that part.

Tightening Or Replacing Elastomers

Elastomers are the cushion between the deck and frame, they absorb the vibration and weight of the user as they run on the treadmill. Over time they can become loose or damaged, resulting in noise. On folding treadmills, elastomers can be examined by putting the treadmill in the folded position and viewing them from the underside of the treadmill. When replacing the deck, it is easy to accidentally loosen an elastomer which may impact the quiet performance of the treadmill.

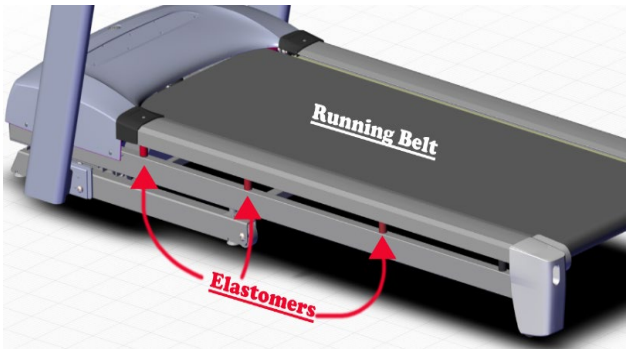

Replacing an elastomer requires the removal of both the running belt and deck.

This video will show you how to remove the side rails, belt, and deck to access the elastomers on a T101. Your model may vary slightly.

Cleaning Rollers

Over time, the front and rear roller can accumulate environmental debris which can cause noise and damage to the treadmill.

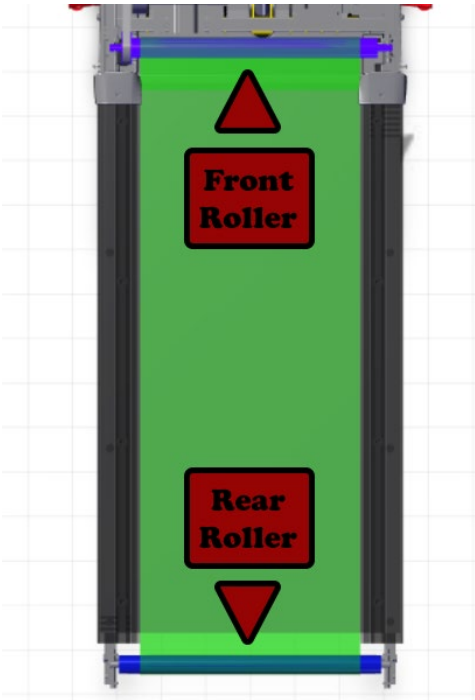

Checking front and rear rollers

Note: Only perform this process at low speeds to avoid pinching fingers.

1. Remove the motor cover.
2. Set the treadmill to the lowest possible speed.
3. Carefully run your hand over the length of the front and rear roller. The roller should be completely smooth, any bumps indicate either debris or damage.
4. If debris is detected, follow this guide for detailed video instructions on how to remove and clean the rollers.
5. If either roller is damaged replace it.

Checking the Condition of the Belt and Deck

The deck and belt look and feel will determine if replacement is needed or if silicone should be added. There are several ways that will show when it's time to replace a running belt, a running deck or BOTH. Besides physical damage to the deck, it usually does not need to be replaced. Should the deck need to be replaced an example of that process can be found here, your treadmill may differ slightly depending on model.

- The most common issue is to see white dust or nylon fabric at the rear of the machine, underneath the deck, and around the rollers – replace belt
- Excess heat from friction could cause the running belt to rip and split in half – replace belt
- Excess heat from friction can cause the underside of the running belt to discolor (dark brownish in color) – replace belt
- Excess heat from friction can cause the top layer of the deck to wear through exposing the wood (brown). This will also damage the belt – replace deck and belt

Procedure to check condition of running surfaces

1. From the rear roller, find the 2 roller bolts inside of the end cap (1 on each side)

2. Loosen these bolts until the belt is loose enough to inspect the underside from the center of the running surface.

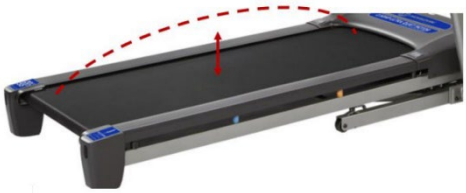

3. Refer to the images below to compare the deck and belt condition

Surface of the running deck

Good – black in color, surface is shiny and smooth to the look and touch

Bad – showing grooves you can see and feel

Bad – showing dull marks you can see and feel.

Underside of the running belt

Good – white in color and no material peals or burn marks. Slight discoloration is normal

Bad – burn marks/lines are starting to appear

Bad – majority of material is black/dark brown in color

Contacting Customer Support

If after exhausting the troubleshooting found within this document the treadmill is still having noise issues, please contact our customer support team for further assistance.

Website: https://support.horizonfitness.com/hc/en-us
Email: info@johnsonfit.com
Phone: 800-335-4348

Change Log

Version	Date	Details	By
1	2022-12-19	Original Version	Maxwell