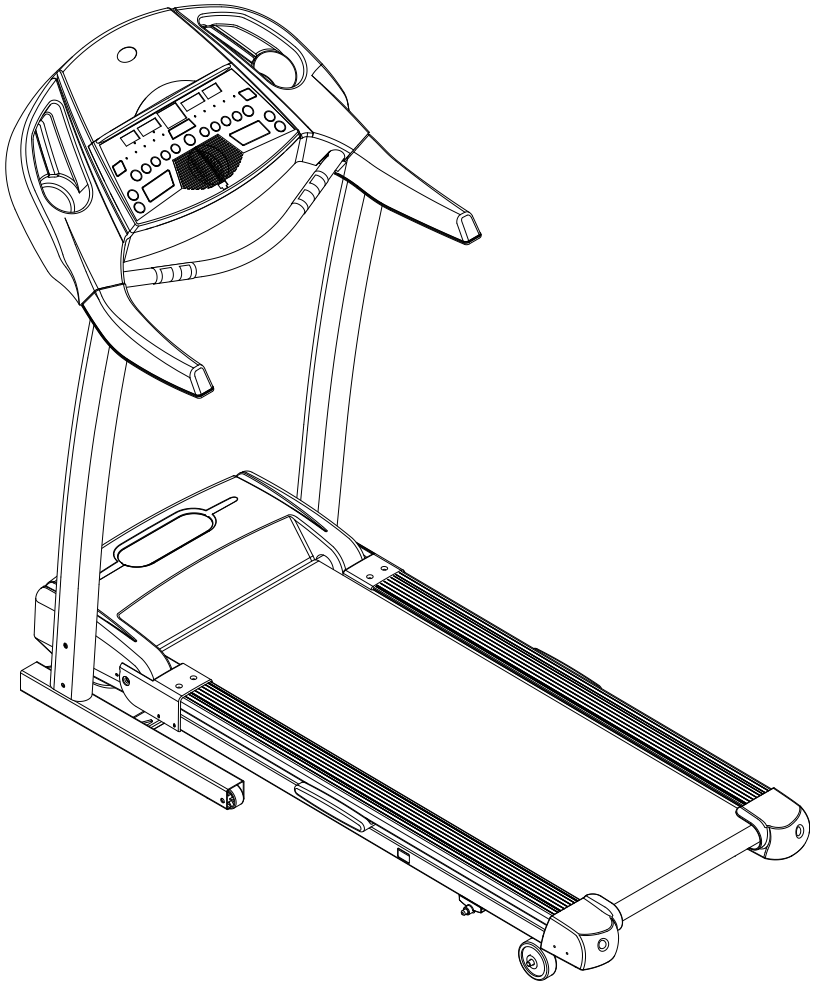

FOR MODEL :

730T

MERIT FITNESS

TREADMILL USER'S GUIDE

INTRODUCTION

CONGRATULATIONS! *on choosing your treadmill. You've taken an important step in developing and sustaining an exercise program! Your treadmill is a tremendously effective tool for achieving your personal fitness goals. Regular use of your treadmill can improve the quality of your life in so many ways.*

Whether your goal is to win races or simply enjoy a fuller, healthier lifestyle, a Merit Fitness treadmill can help you attain it – adding club-quality performance to your at-home workouts, with the ergonomics and innovative features you need to get stronger and healthier, faster. Because we're committed to designing fitness equipment from the inside out, we use only the highest quality components.

You want exercise equipment that offers the most comfort, the best reliability and the highest quality in its class.

Merit Fitness delivers.

TABLE OF CONTENTS

Important Precautions	4
Assembly	6
Before You Begin	12
Treadmill Operation	15
Conditioning Guidelines	19
Troubleshooting & Maintenance	23
Limited Warranty	26
CONTACT INFORMATION	Back Panel

IMPORTANT PRECAUTIONS

SAVE THESE INSTRUCTIONS

Read all instructions before using this treadmill. When using an electrical product, basic precautions should always be followed, including the following: Read all instructions before using this treadmill. It is the responsibility of the owner to ensure that all users of this treadmill are adequately informed of all warnings and precautions. If you have any questions after reading this manual, contact Customer Tech Support at the number listed on the back panel of this manual.

WARNING *Connect this exercise product to a properly grounded outlet only. See grounding instructions.*

GROUNDING INSTRUCTIONS

This product must be grounded. If a treadmill should malfunction or breakdown, grounding provides a path of least resistance for electrical current to reduce the risk of electrical shock. This product is equipped with a cord having an equipment-grounding conductor and a grounding plug. The plug must be plugged into an appropriate outlet that is properly installed and grounded in accordance with local codes and ordinances.

WARNING *Improper connection of the equipment-grounding conductor can result in a risk of electric shock. Check with a qualified electrician or serviceman if you are in doubt as to whether the product is properly grounded. Do not modify the plug provided with the product. If it will not fit the outlet, have a proper outlet installed by a qualified electrician.*

This product is for use on a nominal 110-volt circuit and has a grounding plug that looks like the illustration below. This product must be used on a dedicated circuit. To determine if you are on a dedicated circuit, shut off the power to that circuit and observe if any other devices lose power. If so, move devices to a different circuit. ***Note****: There are usually multiple outlets on one circuit. It is recommended that the treadmill be used with a 20 amp circuit for optimal performance.*

3-Pole Grounded Outlet

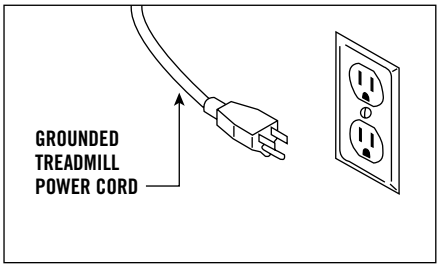

WARNING *To reduce the risk of burns, fire, electrical shock or injury to persons:*

- *Never use the treadmill before securing the safety tether clip to your clothing.*
- *If you experience any kind of pain, including but not limited to chest pains, nausea, dizziness, or shortness of breath, stop exercising immediately and consult your physician before continuing.*
- *Do not wear clothes that might catch on any part of the treadmill.*
- *Always wear athletic shoes while using this equipment.*
- *Do not jump on the treadmill.*
- *Keep power cord away from heated surfaces.*
- *Do not insert or drop any object into any opening.*
- *Unplug treadmill before moving or cleaning it. To clean, wipe surfaces down with soap and slightly damp cloth only; never use solvents. (See MAINTENANCE)*
- *At no time should more than one person be on treadmill while in operation.*
- *The treadmills should not be used by persons weighing more than 275 pounds (124 kilograms). Failure to comply will void the warranty.*
- *The treadmills are intended for in-home use only. Do not use this treadmill in any commercial, rental, school or institutional setting. Failure to comply will void the warranty.*
- *Do not use treadmill in any location that is not temperature controlled, such as but not limited to garages, porches, pool rooms, bathrooms, car ports or outdoors. Failure to comply may void the warranty.*
- *Use the treadmill only as described in this manual.*

At NO time should pets or children under the age of 12 be closer to the treadmill than 10 feet.
At NO time should children under the age of 12 use the treadmill.
Children over the age of 12 should not use the treadmill without adult supervision.

OTHER SAFETY TIPS FOR YOUR TREADMILL

WARNING

OPERATION

To reduce the risk of damaging important components on your treadmill, it is strongly recommended that your treadmill is plugged into a dedicated 20 amp circuit, without the use of an additional extension cord and/or power strip. Failure to comply may void the warranty.

IMPORTANT: *The treadmill is not compatible with GFCI-equipped outlets.*

It is essential that your treadmill is used only indoors, in a climate controlled room. If your treadmill has been exposed to colder temperatures or high moisture climates, it is strongly recommended that the treadmill is warmed up to room temperature before first time use. Failure to do so may cause premature electronic failure.

ASSEMBLY

IMPORTANT: READ THESE SAFETY INSTRUCTIONS BEFORE USE!

WARNING

During the assembly process of the treadmill there are several areas that special attention must be paid. It is very important to follow the assembly instructions correctly and to make sure all parts are firmly tightened. If the assembly instructions are not followed correctly, the treadmill could have frame parts that are not tightened and will seem loose and may cause irritating noises. There should be no side-to-side play in the console masts or any forward and back play in the console assembly or handlebars. If there is any play in these areas, the treadmill has not been properly assembled. To prevent damage to the treadmill, the assembly instructions must be reviewed and corrective actions should be taken.

UNPACKING

Place the treadmill carton on a level flat surface. It is recommended that you place a protective covering on your floor. Take CAUTION when handling and transporting this unit. Never open box when it is on its side. Once the banding straps have been removed, do not lift or transport this unit unless it is fully assembled and in the upright folded position, with the lock latch secure. Unpack the unit where it will be used. The enclosed treadmill is equipped with high-pressure shocks and may spring open if mishandled. Never grab hold of any portion of the incline frame and attempt to lift or move the treadmill. FAILURE TO FOLLOW THESE INSTRUCTIONS COULD RESULT IN INJURY!

Before proceeding, find your treadmill's serial number and model name located underneath the running deck.

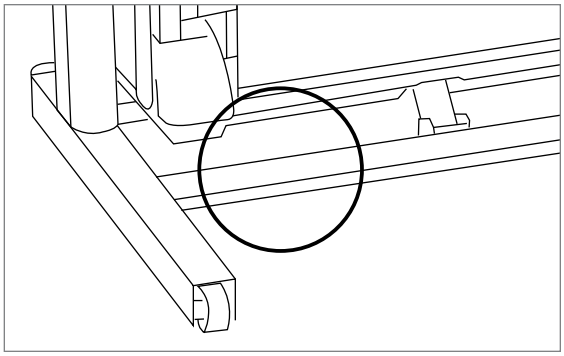

ENTER YOUR SERIAL NUMBER AND MODEL NAME IN THE BOXES BELOW:

SERIAL NUMBER:

MODEL NAME:

** Refer to the SERIAL NUMBER and MODEL NAME when calling for service.*
** Also enter this serial number on your Warranty Card.*

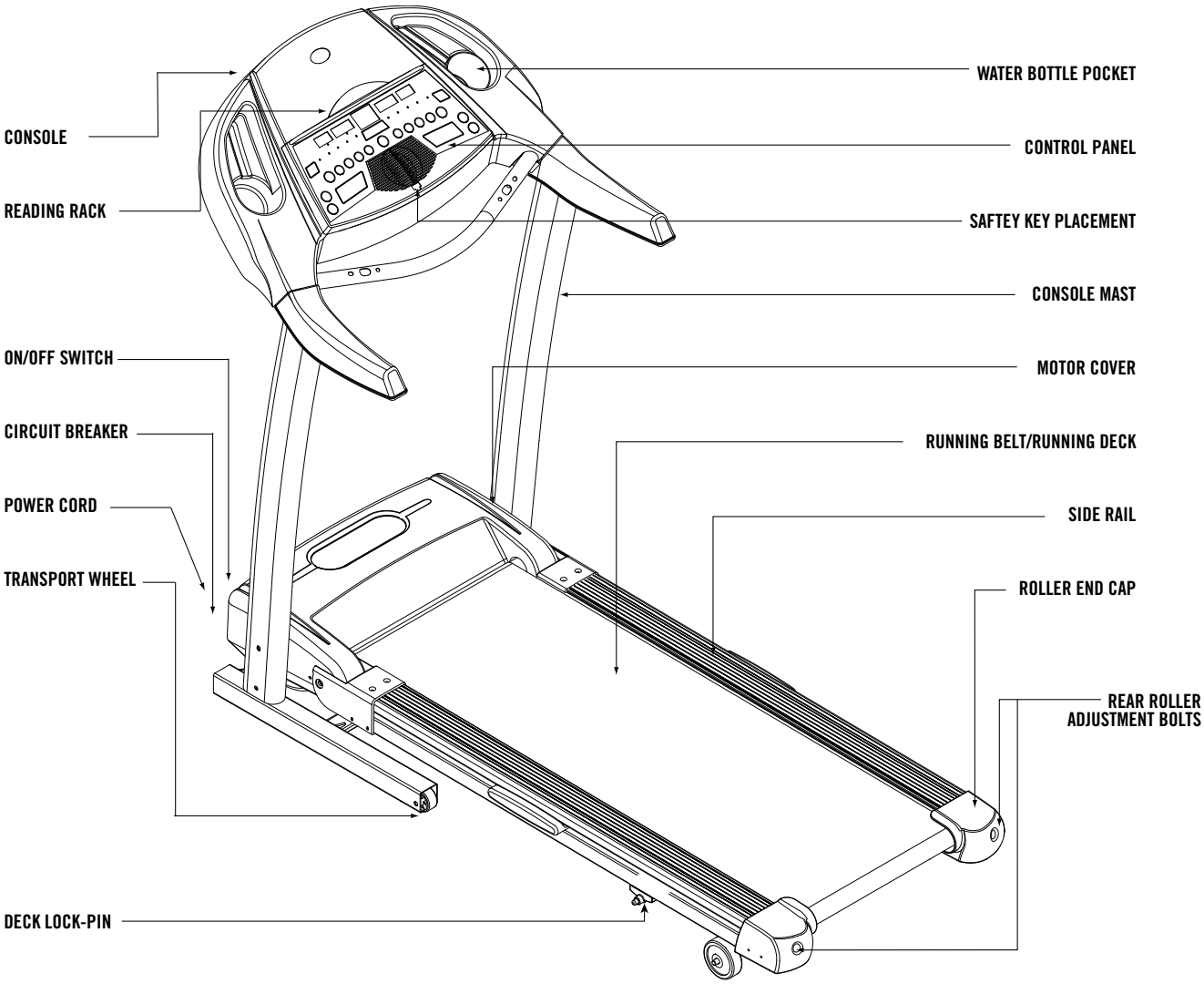

TOOLS INCLUDED

- ☐ *5 mm Allen Wrench*
- ☐ *4 mm T-Wrench*

PARTS INCLUDED

- ☐ *1 Safety Key*
- ☐ *1 Console Assembly*
- ☐ *2 Roller End Caps*
- ☐ *2 Roller End Cap Feet*
- ☐ *2 Console Masts*
- ☐ *4 Hardware Bags*
- ☐ *Silicon Bottle*
- ☐ *Water Bottle Holder*
- ☐ *2 Hand Rails*
- ☐ *1 Deck Lock-Pin*

If you have questions or if there are any missing parts, contact Customer Tech Support. Contact information is located on the back panel of this manual.

PRE-ASSEMBLY

NOTE: *During each assembly step, ensure that ALL nuts and bolts are in place and partially threaded in before completely tightening any ONE bolt. NOTE: A light application of grease may aid in the installation of hardware. Any grease, such as lithium bike grease is recommended.*

ASSEMBLY **STEP 1**

HARDWARE BAG 1 CONTENTS :

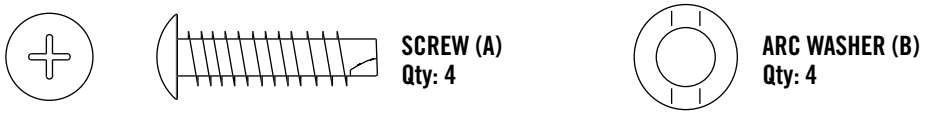

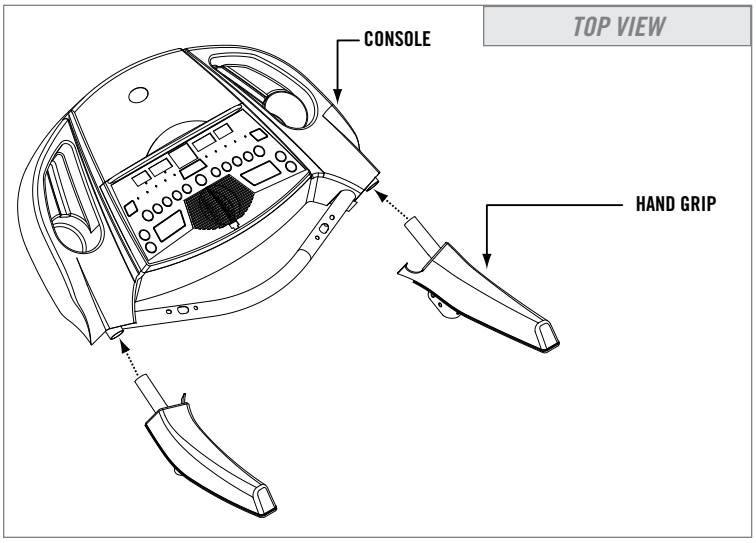

A *Open **HARDWARE BAG 1**.*

B *Insert **HAND GRIP** post into **CONSOLE** tube.*

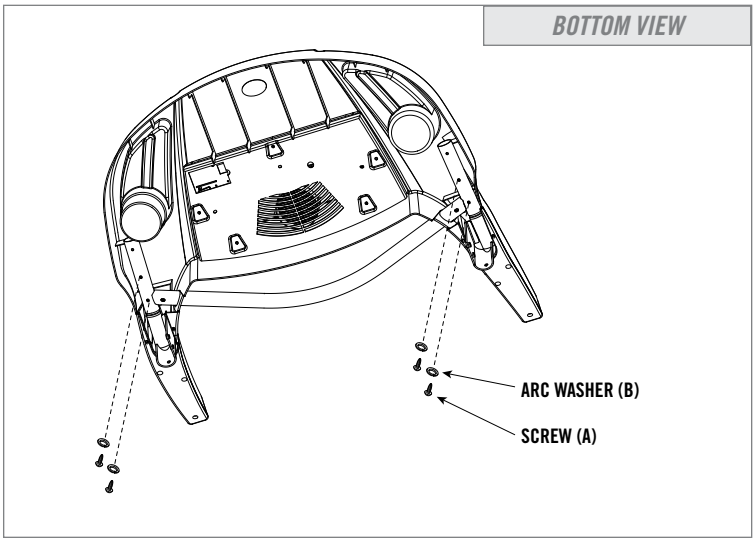

C *Attach the **HAND GRIP** to the **CONSOLE** using 2 **SCREWS (A)** and 2 **ARC WASHERS (B).***

D *Repeat on the other side.*

ASSEMBLY **STEP 2**

HARDWARE BAG 2 CONTENTS :

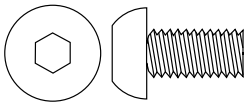

BOLT (C)
Qty: 8

SPRING WASHER (D)
Qty: 8

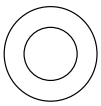

WASHER (E)
Qty: 4

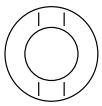

ARC WASHER (G)
Qty: 4

A *Open* ***HARDWARE BAG 2****.*

B *Slide the left* ***CONSOLE MAST*** *down on to the* ***CONSOLE MAST SUPPORT TUBE****. Bolt in place using 2* ***BOLTS (C)****, 2* ***SPRING WASHERS (D)****, and 2* ***ARC WASHERS (G)*** *on the front and 2* ***BOLTS (C),*** *2* ***SPRING WASHERS (D)*** *and 2* ***WASHERS (E)*** *on the side.*

C *Repeat on the other side.*

Note: On right ***CONSOLE MAST****, the* ***CONSOLE WIRE*** *must be threaded through the* ***MAST****.*

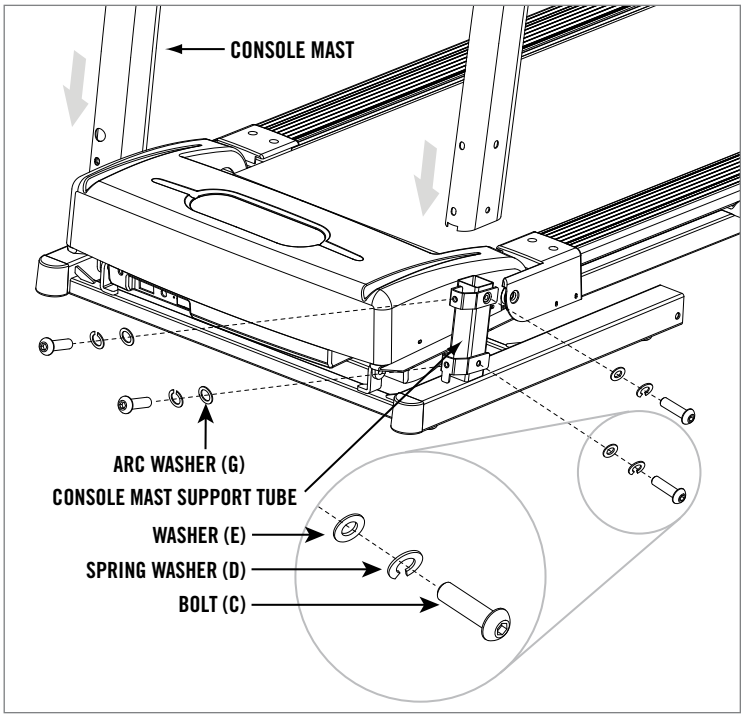

* ***NOTE:*** *Be careful not to pinch any wires while assembling the masts.*

ASSEMBLY **STEP 3**

HARDWARE BAG 3 CONTENTS :

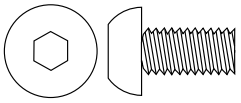

BOLT (C)
Qty: 6

SPRING WASHER (D)
Qty: 4

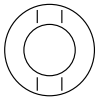

ARC WASHER (B)
Qty: 2

WASHER (F)
Qty: 4

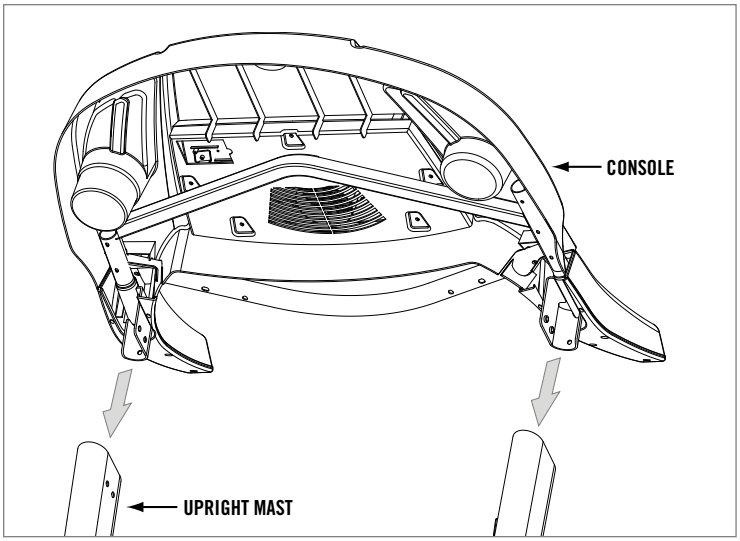

A *Open **HARDWARE BAG 3.***

B *Attach the **CONSOLE** to the **UPRIGHT MAST** using **4 BOLTS (C),** and **4 SPRING WASHERS (D)** on the inside of the console mast.*

C *Attach the **CONSOLE** to the **UPRIGHT MAST** using **2 BOLTS (C)**, and **2 ARC WASHERS (B)** on the front of the console mast.*

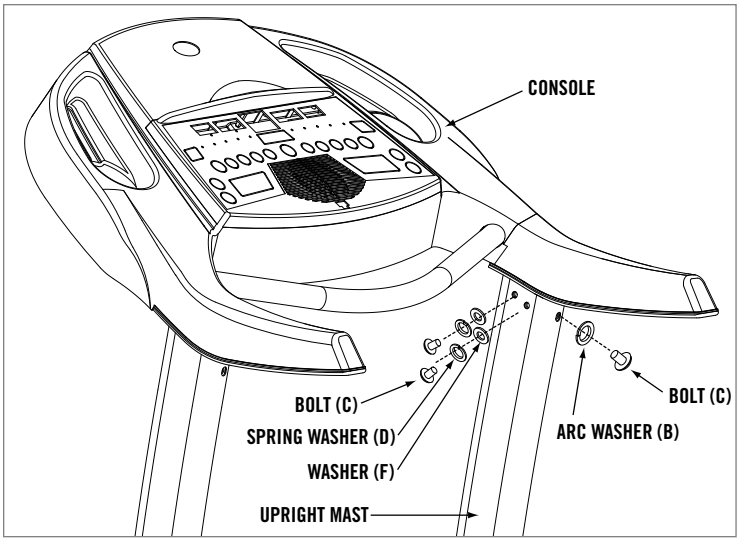

** **NOTE:** Be careful not to pinch any wires while assembling the masts.*

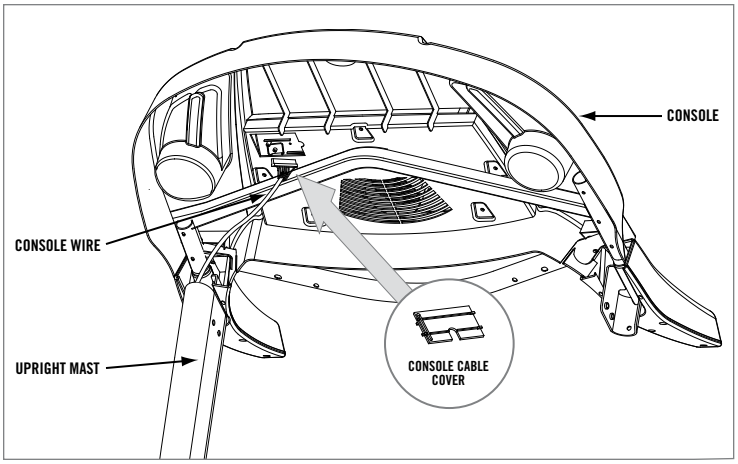

D *Connect the **CONSOLE CABLES** and carefully tuck wires in **MAST** to avoid damage. **Note:** Do not pinch console cable. Be sure the console cable prongs are aligned and the ends are tightly seated into each other.*

E *Attach **CONSOLE CABLE COVER**.*

ASSEMBLY **STEP 4**

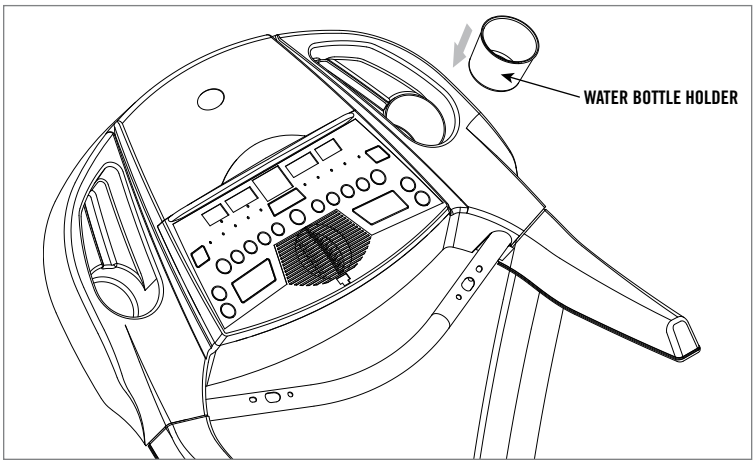

A *Slide the* ***WATER BOTTLE HOLDER*** *down into the hole in the console and snap together.*

ASSEMBLY **STEP 5**

HARDWARE BAG 5 CONTENTS :

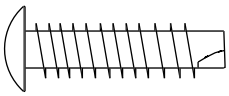

SCREW (E)
Qty: 8

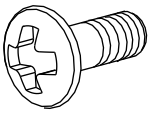

SCREW (F)
Qty: 2

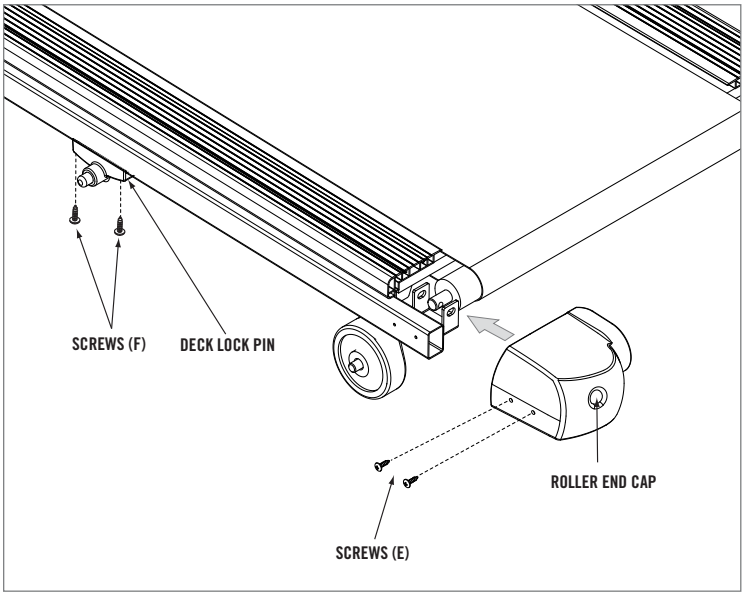

A *Open* ***HARDWARE BAG 4****.*

B *Attach* ***DECK LOCK PIN*** *to the* ***DECK*** *using 2* ***SCREWS (F).***

C *Fold up treadmill (see page 13 for folding instructions).*

NOTE: *Lock latch must be securely engaged before proceeding with assembly.*

D *Attach the right* ***END CAP*** *using 2* ***SCREWS (E)****. Repeat on the other side.*

E *Attach the right* ***END CAP FOOT*** *using 2* ***SCREWS (E)****. Repeat on the other side.*

ASSEMBLY COMPLETE!

BEFORE YOU BEGIN

HERE ARE JUST A FEW OF THE HEALTH BENEFITS OF EXERCISE:

- *Weight Loss*
- *A Healthier Heart*
- *Improved Muscle Tone*
- *Increased Daily Energy Levels*

The key to reaping these benefits is to develop an exercise habit. Your new treadmill will help you eliminate obstacles that prevent you from exercising. Inclement weather and darkness won't interfere with your workout when you use your treadmill in the comfort of your home. This guide provides you with basic information for using and enjoying your new machine.

LOCATION OF THE TREADMILL

Place the treadmill on a level surface. There should be 6 feet of clearance behind the treadmill, 3 feet on each side and one foot in front for folding and the power cord. Do not place the treadmill in any area that will block any vent or air openings. The treadmill should not be located in a garage, covered patio, near water or outdoors.

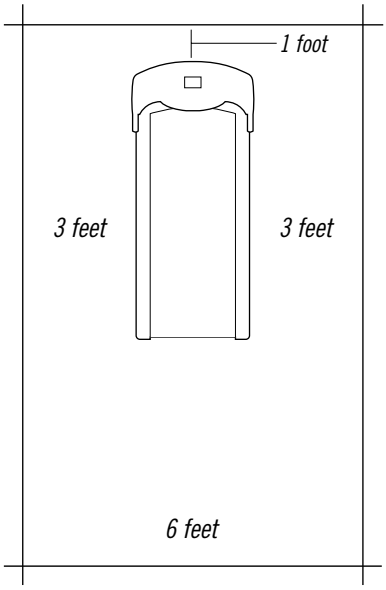

WARNING

DO NOT STAND ON THE BELT

While you are preparing to use the treadmill, do not stand on the belt. Place your feet on the side rails before starting the treadmill. Start walking on the belt only after the belt has begun to move. Never start the treadmill at a fast running speed and attempt to jump on!

SAFETY KEY

Your treadmill will not start unless the safety key is placed in position. Attach the clip end securely to your clothing. This safety key is designed to cut the power to the treadmill if you should fall. Check the operation of the safety key every 2 weeks.

WARNING

NEVER USE THE TREADMILL WITHOUT SECURING THE SAFETY KEY CLIP TO YOUR CLOTHING. PULL ON THE SAFETY KEY CLIP FIRST TO MAKE SURE IT WILL NOT COME OFF YOUR CLOTHING.

PROPER USAGE

Your treadmill is capable of reaching high speeds. Always start off using a slower speed and adjust the speed in small increments to reach a higher speed level. Never leave the treadmill unattended while it is running. When not in use, remove the safety key, turn the on/off switch to off and unplug the power cord. Make sure to follow the MAINTENANCE schedule located on page 25 in this manual. Keep your body and head facing forward. Do not attempt to turn around or look backwards while the treadmill is running. Stop your workout immediately if you feel pain, faint, dizzy or are short of breath.

WARNING

Do not operate the treadmill if the power cord or plug is damaged.
If the treadmill appears to not be working properly, do not use the treadmill.

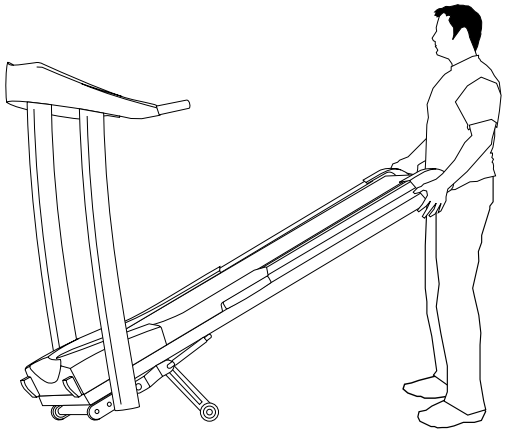

FOLDING

Firmly grasp the back end of the treadmill. Carefully lift the end of the treadmill deck into the upright position until the pull-pin and deck securely lock in place. Make sure the deck is securely latched before letting go. To unfold, firmly grasp the back end of the treadmill. Gently release the pull-pin until it disengages. Carefully lower the deck to the ground.

MOVING

Your treadmill has a pair of transport wheels built into the frame. To move, make sure the treadmill is folded and securely latched. Then firmly grasp the handlebars, tilt the treadmill back and roll.

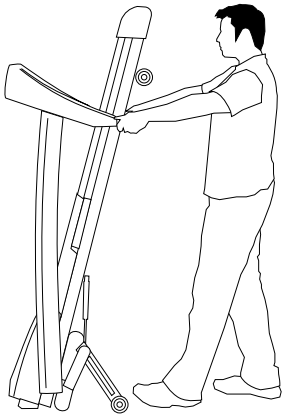

WARNING

Our Treadmills are heavy, use care and additional help if necessary when moving. Do not attempt to move or transport treadmill unless it is in the upright, folded position with the lock latch secured. Failure to follow these instructions could result in injury.

TENSIONING THE RUNNING BELT

The running belt has been properly adjusted at the factory before it was shipped. At times the belt can move off-center during shipment.

CAUTION: *Running belt should NOT be moving during tensioning. Over-tightening the running belt can cause excessive wear on the treadmill as well as its components. Never over-tighten the belt.*

If you can feel a slipping sensation when running on the treadmill, the running belt must be tightened. In most cases, the belt has stretched from use, causing the belt to slip. This is a normal and common adjustment. To eliminate this slipping, ***TURN THE TREADMILL OFF*** *and tension* ***BOTH THE REAR ROLLER BOLTS*** *using the supplied Allen wrench, turning them 1/4 TURN to the right as shown. Turn the treadmill on and check for slipping. Repeat if necessary, but NEVER TURN the roller bolts more than 1/4 turn at a time. Belt is properly tensioned when the slipping sensation is gone.*

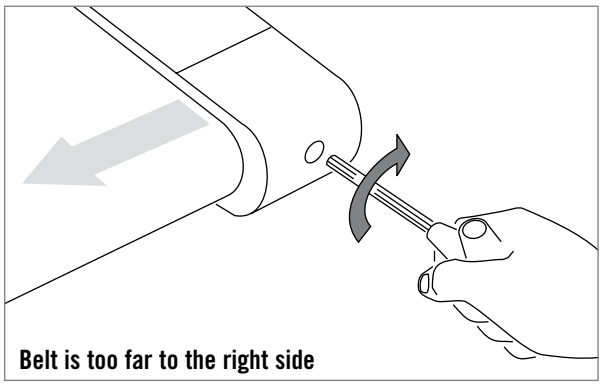

Belt is too far to the right side

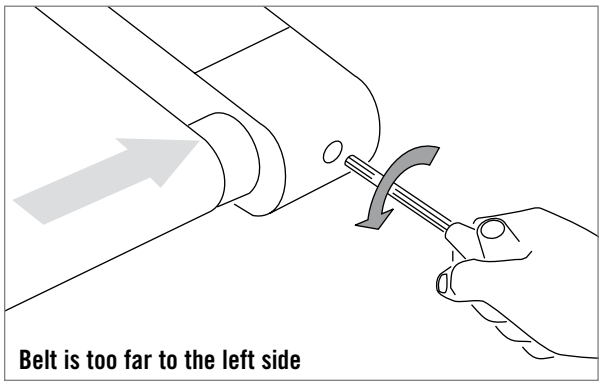

Belt is too far to the left side

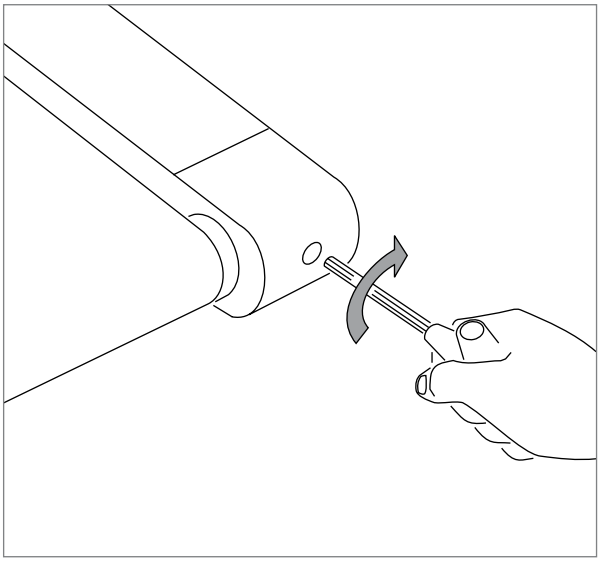

CENTERING THE RUNNING BELT

The running belt has been properly adjusted at the factory before it was shipped. At times the belt can move off-center during shipment. Before operating the treadmill, make sure the belt is centered and remains centered to maintain smooth operation.

CAUTION: *Do not run belt faster than 1 mph while centering. Keep fingers, hair and clothing away from belt at all times.*

If the running belt is too far to the right side:

With the treadmill running at 1 mph, turn the right adjustment bolt clockwise 1/4 TURN at a time (using the supplied Allen wrench). Check the belt alignment. Allow belt to run a full cycle to gauge if more adjustment is needed. Repeat if necessary, until the belt remains centered during use.

If the running belt is too far to the left side:

With the treadmill running at 1 mph, turn the right adjustment bolt counter-clockwise 1/4 TURN at a time (using the supplied Allen wrench). Check the belt alignment. Allow belt to run a full cycle to gauge if more adjustment is needed. Repeat if necessary, until the belt remains centered during use.

TREADMILL OPERATION

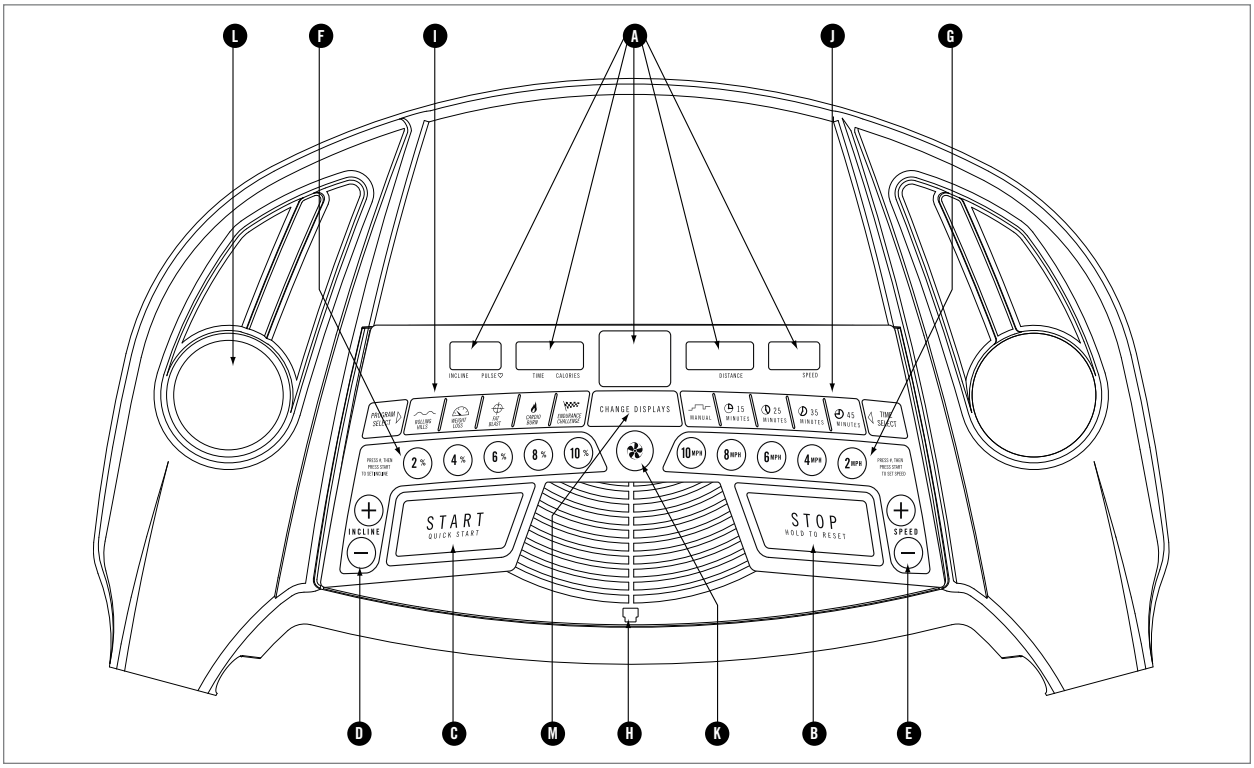

Note: There is a thin protective sheet of clear plastic on the overlay of the console and should be removed.

A) MONITOR DISPLAY: *Speed, Time, Pulse, Distance, Incline, and Calories.*

B) STOP: *Press to pause/end your workout. Hold for 3 seconds to reset the treadmill.*

C) START: *Simply press to begin exercising or starts your program. Press after pressing* ***QUICK-ADJUST SPEED OR INCLINE KEYS.***

D) INCLINE ADJUST KEYS: *Used to adjust incline in small increments (0.5% increments).*

E) SPEED ADJUST KEYS: *Used to adjust speed in small increments (0.1 mph increments).*

F) QUICK-ADJUST INCLINE KEYS: *Used to reach desired incline more quickly. Select before pressing* ***START****.*

G) QUICK-ADJUST SPEED KEYS: *Used to reach desired speed more quickly. Select before pressing* ***START****.*

H) SAFETY KEY POSITION: *Enables treadmill when safety key is engaged.*

I) PROGRAM KEYS: *Press key to select program.*

J) TIME SELECT KEYS: *Press to set desired workout time.*

K) FAN: *Press to turn fan on / off.*

L) WATER BOTTLE / CD / MP3 HOLDERS: *Holds personal workout equipment.*

M) DISPLAY KEY: *Press to change display feedback during workout.*

MONITOR DISPLAY

SPEED *• Shown as MPH. Indicates how fast your walking or running surface is moving.*

TIME *• Shown as Minutes:Seconds. View the time remaining or the time elapsed in your workout.*

PULSE *• Shown as Beats Per Minute. Used to monitor your heart rate (displayed when contact is made with your thumb to the thumb pulse button).*

DISTANCE *• Shown as Miles. Indicates distance traveled during your workout.*

INCLINE *• Shown as Percent. Indicates the incline of your walking or running surface.*

CALORIES *• Total Calories burned during your workout.*

HEART RATE

HAND GRIP SENSORS

How to USE:

Place the palm of your hands directly on the grip pulse handlebars. Both hands must grip the bars for your heart rate to register. It takes 5 consecutive heart beats (15-20 seconds) for your heart rate to register. When gripping the pulse handlebars, do not grip tightly. Holding the grips tightly may elevate your blood pressure. Keep a loose, cupping hold. You may experience an erratic readout if consistently holding the grip pulse handlebars. Make sure to clean the pulse sensors to ensure proper contact can be maintained.

AVAILABLE PROGRAMS

MANUAL: *Allows "On The Fly" manual speed and incline changes. Time-based goal.*

ROLLING HILLS: *Creates the feel of walking or running over hills. Time-based goal.*

WEIGHT LOSS: *Keeps user in their optimal fat burning zone.*

FAT BLAST: *Burn fat at an increased rate.*

CARDIO BURN: *Burns carbs and tones muscles. Time-based goal.*

ENDURANCE CHALLENGE: *Tones muscle and challenges cardiovascular system.*

GETTING STARTED / SELECTING A PROGRAM

1) *Check to make sure no objects are placed on the belt that will hinder the movement of the treadmill.*
2) *Plug in the power cord and turn the treadmill ON.*
3) *Stand on the side rails of the treadmill.*
4) *Attach the safety key clip to part of your clothing.*
5) *Insert the safety key into the safety keyhole in the console.*
6) *You have two options to start your workout:*

   A) ***QUICK START UP***
   *Simply press the **START** key to begin working out. OR...*

   B) ***SELECT A PROGRAM***
   *Press the **TIME SELECT** key (use + / - keys for time intervals not shown on quick time select option).*
   *Press **PROGRAM SELECT** key.*
   *Press **START**.*

QUICK KEY OPERATION:
*Once you have started your program you can use the quick keys to quickly change your speed and incline level. Press the number of your desired speed then press the **START** key. The **START** key confirms that this is the speed you want and the treadmill will adjust the speed or incline accordingly.*

TO RESET CONSOLE:
*Hold **STOP** key for 3 seconds.*

FINISHING YOUR WORKOUT
*When your workout is complete, the **MONITOR DISPLAY** will flash and beep. Your workout information will stay displayed on the console for 30 seconds and then reset.*

CLEAR CURRENT SELECTION
*To clear the current program selection or screen, hold the **STOP** button for 4-5 seconds.*

CHANGE VIEWING SCREENS
*To have the display screen rotate continuously (Speed and Time, Pulse and Distance, Incline and Calories), hold the **CHANGE DISPLAYS** button for 4-5 seconds.*

PROGRAM PROFILES

ROLLING HILLS (INCLINE)

TIME	60	60	60	60	60	60	60	60	60	60	60	60	60	60	60	60	60	60	60	60
PROG SEG	Warm Up				1	2	3	4	5	6	7	8	9	10	11	12	Cool Down			
INCLINE	0	0	0	1	1	2	3	4	5	6	5	4	3	2	1	2	1	1	0	0

WEIGHT LOSS (SPEED CHANGES)

TIME	60	60	60	60	60	60	60	60	60	60	60	60	60	60	60	60	60	60	60	60
PROG SEG	Warm Up				1	2	3	4	5	6	7	8	9	10	11	12	Cool Down			
SPEED	2	2	2	3	2	3	3	4	4	3	3	4	4	3	3	4	3	3	2	2

FAT BLAST (INCLINE) *Start Speed is 3mph.*

TIME	60	60	60	60	60	60	60	60	60	60	60	60	60	60	60	60	60	60	60	60
PROG SEG	Warm Up				1	2	3	4	5	6	7	8	9	10	11	12	Cool Down			
INCLINE	1	2	2	3	3	3	4	4	5	5	5	5	4	4	3	3	2	1	0	0

CARDIO BURN (SPEED CHANGES)

TIME	60	60	60	60	60	60	60	60	60	60	60	60	60	60	60	60	60	60	60	60
PROG SEG	Warm Up				1	2	3	4	5	6	7	8	9	10	11	12	Cool Down			
SPEED	2	2	2	3	4	3	4	4	3	3	4	4	4	3	4	3	3	3	2	2

ENDURANCE CHALLENGE (INCLINE CHANGES) *Start Speed is 3 mph.*

TIME	60	60	60	60	60	60	60	60	60	60	60	60	60	60	60	60	60	60	60	60
PROG SEG	Warm Up				1	2	3	4	5	6	7	8	9	10	11	12	Cool Down			
INCLINE	1	1	2	3	2	3	4	5	5	6	6	4	4	3	4	5	3	2	0	0

CONDITIONING GUIDELINES

ALWAYS CONSULT YOUR PHYSICIAN BEFORE BEGINNING AN EXERCISE PROGRAM.

HOW OFTEN? (Frequency of Workouts)

The American Heart Association recommends that you exercise at least 3 to 4 days per week to maintain cardiovascular fitness. If you have other goals such as weight or fat loss, you will achieve your goal faster with more frequent exercise. Whether it's 3 days or 6 days, remember that your ultimate goal should be to make exercise a lifetime habit. Many people are successful staying with a fitness program if they set aside a specific time of day to exercise. It doesn't matter whether it's in the morning before breakfast, during lunch hour or while watching the evening news. What's more important is that it's a time that allows you to keep a schedule, and a time when you won't be interrupted. To be successful with your fitness program, you have to make it a priority in your life. So decide on a time, pull out your day planner and pencil in your exercise times for the next month!

HOW LONG? (Duration of Workouts)

For aerobic exercise benefits, it's recommended that you exercise from between 24 and 60 minutes per session. But start slowly and gradually increase your exercise times. If you've been sedentary during the past year, it may be a good idea to keep your exercise times to as little as five minutes initially. Your body will need time to adjust to the new activity. If your goal is weight loss, a longer exercise session at lower intensities has been found to be most effective. A workout time of 48 minutes or more is recommended for best weight loss results.

HOW HARD? (Intensity of Workouts)

How hard you workout is also determined by your goals. If you use your treadmill to prepare for a 5K run, you will probably work out at a higher intensity than if your goal is general fitness. Regardless of your long term goals, always begin an exercise program at low intensity. Aerobic exercise does not have to be painful to be beneficial! There are two ways to measure your exercise intensity. The first is by monitoring your heart rate (using the grip pulse handlebars or a wireless chest transmitter - may be sold separately), and the second is by evaluating your perceived exertion level (this is simpler than it sounds!).

PERCEIVED EXERTION LEVEL

A simple way to gauge your exercise intensity is to evaluate your perceived exertion level. While exercising, if you are too winded to maintain a conversation without gasping, you are working out too hard. A good rule of thumb is to work to the point of exhilaration, not exhaustion. If you cannot catch your breath, it's time to slow down. Always be aware of these warning signs of overexertion.

TARGET HEART RATE ZONE CHART

What is Target Heart Rate Zone?

Target Heart Rate Zone tells you the number of times per minute your heart needs to beat to achieve a desired workout effect. It is represented as a percentage of the maximum number of times your heart can beat per minute. Target Zone will vary for each individual, depending on age, current level of conditioning, and personal fitness goals. The American Heart Association recommends working-out at a Target Heart Rate Zone of between 60% and 75% of your maximum heart rate. A beginner will want to workout in the 60% range while a more experienced exerciser will want to workout in the 70-75% range. See chart for reference.

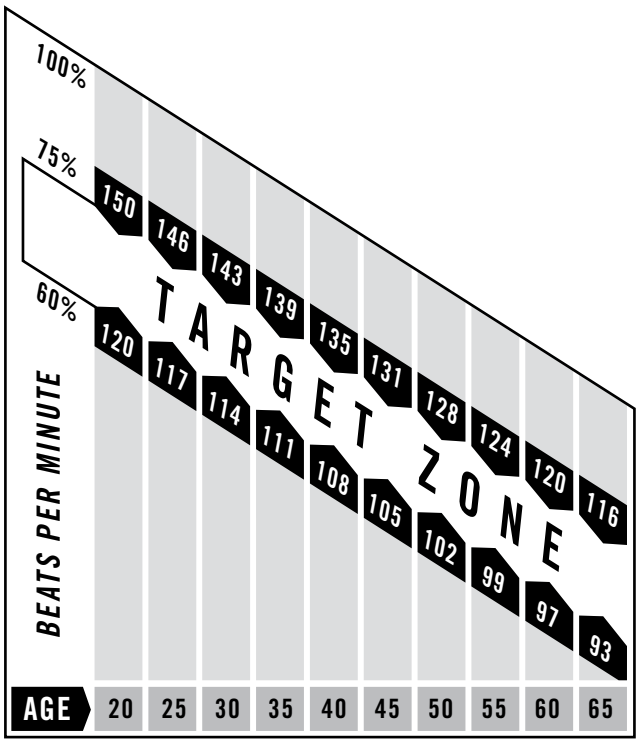

EXAMPLE:

For a 42-year-old user: Find age along the bottom of the chart (round to 40), follow age column up to the target zone bar. Results: 60% of maximum Hear Rate = 108 Beats Per Minute, 75% of maximum Heart Rate = 135 Beat Per Minute.

ALWAYS CONSULT YOUR PHYSICIAN BEFORE BEGINNING AN EXERCISE PROGRAM.

TIPS STRETCHING

STRETCH FIRST

Before using your product, it is best to take a few minutes doing a few gentle stretching exercises. Stretching prior to exercise will improve flexibility and reduce chances of exercise related injury. Ease into each of these stretches with a slow gentle motion. Do not stretch to the point of pain. Make sure not to bounce while doing these stretches.

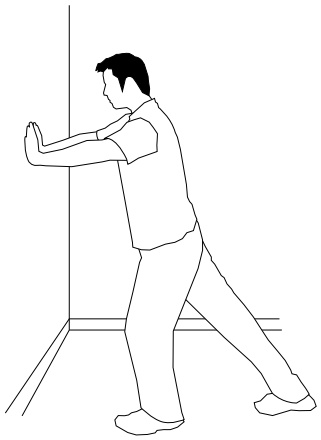

1. STANDING CALVE MUSCLE STRETCH

Stand near a wall with the toes of tour left foot about 18" from the wall, and the right foot about 12" behind the other foot. Lean forward, pushing against the wall with your palms. Keep your heels flat and hold this position for a count of 15 seconds. Make sure that you do not bounce while stretching. Repeat on the other side.

2. STANDING QUADRICEPS STRETCH

Using a wall to provide balance, grasp your left ankle with your left hand and hold your foot against the back of your thigh for 15 seconds. Repeat with your right ankle and hand.

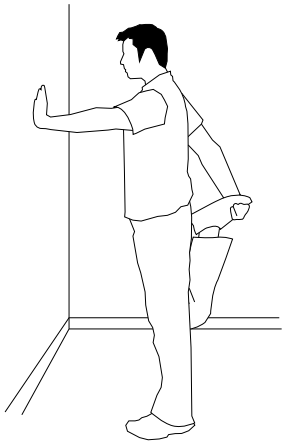

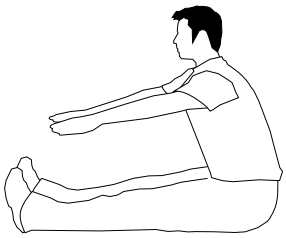

3. SITTING HAMSTRING & LOWER BACK MUSCLE STRETCH

Sit on the floor with your legs together and straight out in front of you. Do not lock your knees. Extend your fingers towards your toes and hold for a count of 15 seconds. Make sure that you do not bounce while stretching. Sit upright again. Repeat one time.

TIPS — THE IMPORTANCE OF WARM UP & COOL DOWN

WARM UP

The first 2 to 5 minutes of a workout should be devoted to warming up. The warm-up will limber your muscles and prepare them for more strenuous exercise. Make sure that you warm-up on your product at a slow pace. The warm up should gradually bring your heart rate into your Target Heart Rate Zone.

COOL DOWN

Never stop exercising suddenly! A cool-down period of 3-5 minutes allows your heart to readjust to the decreased demand. Make sure that your cool down period consists of a very slow pace to allow your heart rate to lower. After the cool-down, repeat the stretching exercises listed above to loosen and relax your muscles.

TIPS — ACHIEVING YOUR FITNESS GOALS

An important step in developing a long term fitness program is to determine your goals. Is your primary goal for exercising to lose weight? Improve muscle? Reduce stress? Prepare for the spring racing schedule? Knowing what your goals are will help you develop a more successful exercise program. Below are some common exercise goals:

- *Weight Loss - lower intensity, longer duration workouts*
- *Improve Body Shape and Tone - interval workouts, alternate between hi and low intensities*
- *Increased Energy Level - more frequent daily workouts*
- *Improved Sports Performance - high intensity workouts*
- *Improved Cardiovascular Endurance - moderate intensity, longer duration workouts*

If possible try to define your personal goals in precise, measurable terms, and then put your goals in writing. The more specific you can be, the easier it will be to track your progress. If your goals are long term, divide them up into monthly and weekly segments. Longer term goals can lose some of the immediate motivation benefits. Short term goals are easier to achieve. Your console provides you with several readouts that can be used to record your progress. You can track Distance, Calories or Time.

TROUBLESHOOTING

COMMON PRODUCT QUESTIONS

ARE THE SOUNDS MY TREADMILL MAKES NORMAL?

All treadmills make a certain type of thumping noise due to the belt riding over the rollers, especially new treadmills. This noise will diminish over time, although may not totally go away. Over time, the belt will stretch, causing the belt to ride smoother over the rollers.

WHY IS THE TREADMILL I PURCHASED LOUDER THAN THE ONE AT THE STORE?

All fitness products seem quieter in a large store showroom because there is generally more background noise than in your home. Also, there will be less reverberation on a carpeted concrete floor than on a wood overlay floor. Sometimes a heavy rubber mat will help reduce reverberation through the floor. If a fitness product is placed close to a wall, there will be more reflected noise.

TROUBLESHOOTING - TREADMILL

Your treadmill is designed to be reliable and easy to use. However, if you experience a problem, please reference the troubleshooting guide listed below.

PROBLEM: *The console does not light up and/or the belt does not move.*
SOLUTION: *Verify the following:*

IF YES:

- *Double check that all connections are secure, especially the console cable. Unplug and reconnect the console cable to verify.*
- *Make sure the console cable is not pinched or damaged in any way.*
- *Turn the power off, unplug power cable and wait 60 seconds. Remove motor cover. Wait until all red LED lights have gone off on the motor control board before proceeding. Next, verify that no wires are loose or disconnected.*

IF NO:

- *Verify that the outlet the machine is plugged into is functional. Double check that the breaker has not tripped, it is on a dedicated 20-amp circuit, it is not on a GFCI equipped outlet, and it is not plugged into a power strip/surge protector or extension cord.*
- *The power cord is not pinched or damaged and is properly plugged into the outlet AND the machine.*
- *The power switch is turned to the ON position.*

PROBLEM: *The treadmill circuit breaker trips during a workout.*

SOLUTION: *Verify the following:*

- *Make sure the treadmill is plugged into a dedicated 20-amp circuit.*
- *Verify that you do not have the machine on an extension cord or surge protector.*
- *Confirm that the machine is not plugged into a GFCI-equipped outlet or on a circuit that has a GFCI-equipped outlet on it.*

PROBLEM: *The running belt does not stay centered during a workout.*

SOLUTION: *Verify the following:*

- *Make sure the treadmill is on a level surface.*
- *Verify that the belt is properly tightened and centered (Refer to the Adjustment section for detailed directions).*

TROUBLESHOOTING - HEART RATE

Check your exercise environment for sources of interference such as fluorescent lights, computers, underground fencing, home security systems or appliances containing large motors. These items may cause erratic heart rate readouts.

You may experience an erratic readout under the following conditions:

- *Gripping the heart rate handlebars too tight. Try to maintain moderate pressure while holding onto the heart rate handlebars.*
- *Constant movement and vibration due to constantly holding the heart rate handlebars while exercising. If you are receiving erratic heart rate readouts, try to only hold the grips long enough to monitor your heart rate.*
- *When you are breathing heavily during a workout.*
- *When your hands are constricted by wearing a ring.*
- *When your hands are dry or cold. Try to moisten your palms by rubbing them together to warm.*
- *Anyone with heavy arrhythmia.*
- *Anyone with arteriosclerosis or peripheral circulation disorder.*
- *Anyone whose skin on the measuring palm is especially thick.*

If the above troubleshooting section does not remedy the problem, discontinue use and turn the power off.

PLEASE CALL CUSTOMER TECH SUPPORT AT THE NUMBER ON THE BACK PANEL.

The following information may be asked of you when you call. Please have these items readily available:

- *Model Name*
- *Serial Number*
- *Date of Purchase (receipt or credit card statement)*

In order for Customer Tech Support to service your treadmill they may need to ask detailed questions about the symptoms that are occurring. Some troubleshooting questions that may be asked are:

- *How long has this problem been occurring?*
- *Does this problem occur with every use? With every user?*
- *If you are hearing a noise, does it come from the front or the back? What kind of noise is it (thumping, grinding, squeaking, chirping etc.)?*
- *Has the machine been lubricated and maintained per the maintenance schedule?*

Answering these and other questions will give the technicians the ability to send proper replacement parts and the service necessary to get you and your Merit Fitness treadmill running again!

MAINTENANCE

Cleanliness of your treadmill and its operation environment will keep maintenance problems and service calls to a minimum. For this reason, we recommend that the following preventive maintenance schedule be followed.

AFTER EACH USE (DAILY)

Clean and inspect, following these steps:

- *Turn off the treadmill with the on/off switch, then unplug the power cord at the wall outlet.*
- *Wipe down the running belt, deck, motor cover, and console casing with a damp cloth. Never use solvents, as they can cause damage to the treadmill.*
- *Inspect the power cord. If the power cord is damaged, contact Merit Fitness.*
- *Make sure the power cord is not underneath the treadmill or in any other area where it can become pinched or cut.*
- *Check the tension and alignment of the running belt. Make sure that the treadmill belt will not damage any other components on the treadmill by being misaligned.*

EVERY WEEK

Clean underneath the treadmill, following these steps:

- *Turn off the treadmill with the on/off switch, then unplug the power cord at the wall outlet.*
- *Fold the treadmill into the upright position, making sure that the lock latch is secure.*
- *Move the treadmill to a remote location.*
- *Wipe or vacuum any dust particles or other objects that may have accumulated underneath the treadmill.*
- *Return the treadmill to its previous position.*

EVERY MONTH - IMPORTANT!

- *Turn off the treadmill with the on/off switch, then unplug the power cord at the wall outlet.*
- *Inspect all assembly bolts of the machine for proper tightness.*
- *Turn off the treadmill and wait 60 seconds.*
- *Remove the motor cover. Wait until ALL LED lights turn off.*
- *Clean the motor and lower board area to eliminate any lint or dust particles that may have accumulated. Failure to do so may result in premature failure of key electrical components.*
- *Vacuum and wipe down the belt with a damp cloth. Vacuum any black/white particles that may accumulate around the unit. These particles may accumulate from normal treadmill use.*

EVERY 6 MONTHS

It is necessary to lubricate your treadmill running deck every six months to maintain optimal performance of your treadmill. Only use lubricant provided by Merit Fitness! Please contact Merit Fitness with questions about applying lubricant to your treadmill.

- *Turn off the treadmill with the on/off switch, then unplug the power cord at the wall outlet.*
- *Loosen both the rear roller bolts. (For best results, place two removable marks on both sides of the frame and note roller position). Once the belt is loosened, take the bottle of lubricant and apply it to the entire top surface of the running deck. Tighten both rear roller bolts (matching up the marks for proper position) to original position. After you have applied lubricant, plug in the power cord, insert the safety key, start the treadmill and walk on the belt for two minutes to spread the lubricant.*

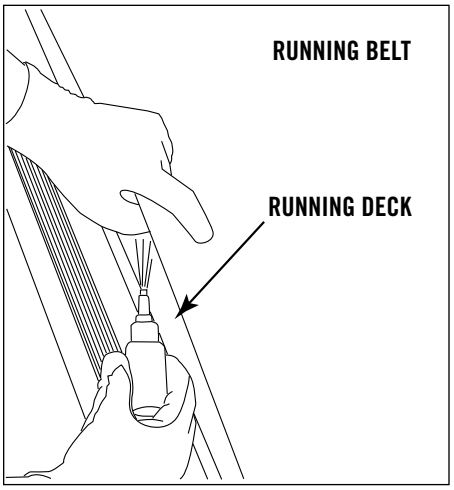

LIMITED HOME-USE WARRANTY

WEIGHT CAPACITY = 275 lbs (124 kilograms).

FRAME • LIFETIME
Merit Fitness warrants the frame against defects in workmanship and materials for the lifetime of the frame from the date of purchase. (The frame is defined as the welded metal base of the unit and does not included any parts that can be removed.)

DRIVE MOTOR/ELEVATION • 3 YEARS
Merit Fitness warrants the drive/elevation motors against defects in workmanship and materials for a period of three years from the date of purchase, so long as the device remains in the possession of the original owner.

ELECTRONICS & PARTS • 6 MONTHS
Merit Fitness warrants the electronic components, finish and all original parts for a period of six months from the date of original purchase, so long as the device remains in the possession of the original owner.

LABOR • 90 DAYS
Merit Fitness shall cover the labor cost for the repair of the device for a period of 90 days from the date of the original purchase, so long as the device remains in the possession of the original owner.

EXCLUSIONS AND LIMITATIONS

Who IS covered:
- *The original owner and is not transferable.*

What IS covered:
- *Repair or replacement of a defective motor, electronic component, or defective part and is the sole remedy of the warranty.*

What IS NOT covered:
- *Normal wear and tear, improper assembly or maintenance, or installation of parts or accessories not originally intended or compatible with the equipment as sold.*
- *Damage or failure due to accident, abuse, corrosion, discoloration of paint or plastic, neglect, theft, vandalism, fire, flood, wind, lightning, freezing, or other natural disasters of any kind, power reduction, fluctuation or failure from whatever cause, unusual atmospheric conditions, collision, introduction of foreign objects into the covered unit, or modifications that are unauthorized or not recommended by Merit Fitness.*
- *Incidental or consequential damages. Merit Fitness is not responsible or liable for indirect, special or consequential damages, economic loss, loss of property, or profits, loss of enjoyment or use, or other consequential damages of whatsoever nature in connection with the purchase, use, repair or maintenance of the equipment.*
- *Equipment used for commercial purposes or any use other than a single family or Household, unless endorsed by Merit Fitness for coverage.*
- *Equipment owned or operated outside the US and Canada.*
- *Delivery, assembly, installation, setup for original or replacement units or labor or other costs associated with removal or replacement of the covered unit.*
- *Any attempt to repair this equipment creates a risk of injury. Merit Fitness is not responsible or liable for any damage, loss or liability arising from any personal injury incurred during the course of, or as a result of any repair or attempted repair of your fitness equipment by other than an authorized service technician. All repairs attempted by you on your fitness equipment are undertaken AT YOUR OWN RISK and Merit Fitness shall have no liability for any injury to the person or property arising from such repairs.*

SERVICE/RETURNS
- *In-home service is available within 150 miles of the nearest authorized repair center (Mileage beyond 150 miles from an authorized service center is the responsibility of the consumer).*
- *All returns must be pre-authorized by Merit Fitness.*
- *Merit Fitness' obligation under this warranty is limited to replacing or repairing, at Merit Fitness' option, the same or comparable model at one of its authorized service centers.*
- *A Merit Fitness authorized service center must receive all equipment for which a warranty claim is made. This equipment must be received with all freight and other transportation charges prepaid, accompanied by sufficient proof of purchase.*
- *Replacement units, parts and electronic components reconditioned to As New Condition by Merit Fitness or its vendors may sometimes be supplied as warranty replacement parts and constitute fulfillment of warranty terms.*
- *This warranty gives you specific legal rights, and your rights may vary from state to state.*

CUSTOMER TECH SUPPORT

If you have any questions or comments, you may contact one of our trained customer technicians via phone, email or our website.

Customer Tech Support Hotline: ***1-877-50-MERIT***
Website: ***www.meritfitness.com***

Customer Tech Support hours: Monday - Friday, 8 am - 5 pm CST (excluding holidays)
NOTE*: Please read the TROUBLESHOOTING section before contacting Customer Tech Support.*
DO NOT return the product to the store.

1620 Landmark Dr,
Cottage Grove, WI 53527
Tel: 1.877.50.MERIT