TREADMILL BELT SPEED

TROUBLESHOOTING GUIDE

FOR

T101-05, T101-07, T101-08, TR5, TR3 TREADMILLS

JOHNSON HEALTH TECH - TCMT

V1.2 - UPDATED 1/12/2023

Contents

INTRODUCTION **3**
Initial Checklist 3
Flowchart **6**
Root Causes **8**
Mis-adjusted or faulty belt speed sensor 9
High belt/deck friction triggering overcurrent protection 10
Cell phone or other RF causing console glitches 11
Worn or damaged motor commutator/brushes or other motor failure 12
Motor Control Board (MCB) failure 14
Damaged console cable/console cable too short (after incline) 15
Loose wire connection 16
Intermittent Emergency Stop connection 17
Damage to rear roller 17
Low tension allowing belt slippage or drive belt damage 17
Treadmill or panel overcurrent breaker opening 18
Intermittent stuck key on console 20
Treadmill error codes 20
E-1 error code 20
E-2 error code 21
E-b error code 21
Treadmill issues after Software Update **21**
Updating console software **22**
Calibrating the speed sensor **22**
Inspecting and cleaning the motor (Technician only) **23**
Change Log **25**

INTRODUCTION

There are many possible root causes of belt speed control issues on Retail/IPO treadmill models. This document will help diagnose those issues and suggest possible corrective actions – settings, adjustments, or part replacement.

Are there reported speed control issues after a software update?

See section Treadmill Slower after Software Update

Initial Checklist

Before concluding hardware failure is the root cause, rule out the following.

1. Check that the software is up to date. Software download files and instructions are available here: https://support.horizonfitness.com/hc/en-us/articles/5149009125005-Software-and-Firmware-Updates
2. The treadmill must be connected to a 'dedicated 15-amp circuit' by itself. – no other appliances or devices should be powered from the same breaker the treadmill is powered from. Confirm that the outlet is not a GFCI or AFCI outlet.

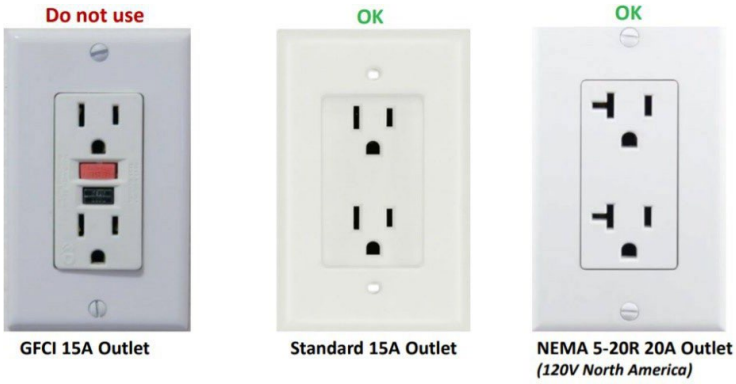

3. Treadmills should not be connected to power with an extension cord, power strip, surge protector, or any other device. Remove any of these and plug the treadmill directly into the wall power outlet before proceeding. If an extension cord must be used, it must be as short as practicable, and the conductors should be 14 gauge or better (a lower gauge number is better). Do not use any extension cord over 25' long.
4. Remove the Safety Key/Emergency Stop and confirm that the metal tab & magnets are clean. Orient it correctly and re-insert into the socket. It should remain seated in place, with minimal free-play or looseness.
5. The belt & deck must be lubricated after first time set-up and periodically lubricated every 3 months/150 miles. If this hasn't been done routinely, suspect High belt/deck friction triggering overcurrent protection.
6. Some workouts include automatic speed changes. When these workouts end the belt may stop, possibly without obvious notification. Confirm that when the speed issue occurs, the workout itself isn't the cause.
7. A pinched or damaged console cable can cause erratic and difficult-to-diagnose behavior. Always check the console cable thoroughly, especially at the top and bottom of the mast where it can be kinked, crushed, or partially cut during final assembly. See additional detail in Damaged console cable/console cable too short (after incline)

8. If the treadmill feels like it's not running at the correct speed consistently, it may need to be calibrated. See instructions for how to do that see here (T101, TR5, TR3 only).

9. When the STOP button is pressed, the treadmill may enter a PAUSE state. Pressing START again can cause the belt to return to whatever speed it was set to when STOP was first pressed.
10. When starting the running belt from a stopped/paused state, stand on the siderails until the belt reaches a steady speed. The belt can fail to start with a heavy load, or 'overshoot' the commanded speed when accelerating with a load.

With these factors ruled out, use the following flowchart to narrow down the possible root causes of the belt speed control issue.

Flowchart

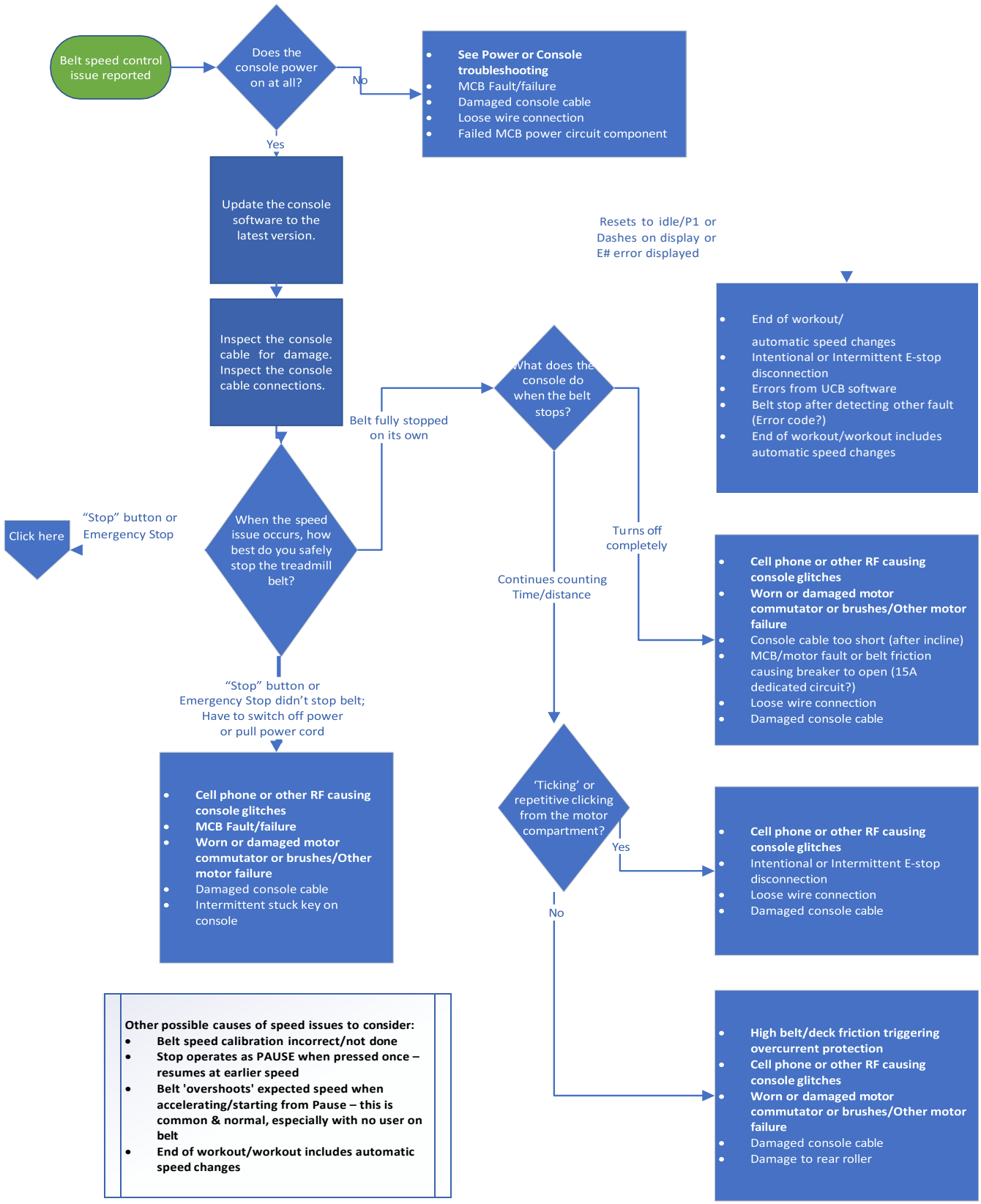
Belt speed control issue reported
Does the console power on at all?
No
See Power or Console troubleshooting
MCB Fault/failure
Damaged console cable
Loose wire connection
Failed MCB power circuit component
Yes
Update the console software to the latest version.
Inspect the console cable for damage. Inspect the console cable connections.
Click here
"Stop" button or Emergency Stop
When the speed issue occurs, how best do you safely stop the treadmill belt?
Belt fully stopped on its own
What does the console do when the belt stops?
Resets to idle/P1 or Dashes on display or E# error displayed
End of workout/ automatic speed changes
Intentional or Intermittent E-stop disconnection
Errors from UCB software
Belt stop after detecting other fault (Error code?)
End of workout/workout includes automatic speed changes
Turns off completely
Cell phone or other RF causing console glitches
Worn or damaged motor commutator or brushes/Other motor failure
Console cable too short (after incline)
MCB/motor fault or belt friction causing breaker to open (15A dedicated circuit?)
Loose wire connection
Damaged console cable
Continues counting Time/distance
"Stop" button or Emergency Stop didn't stop belt; Have to switch off power or pull power cord
Cell phone or other RF causing console glitches
MCB Fault/failure
Worn or damaged motor commutator or brushes/Other motor failure
Damaged console cable
Intermittent stuck key on console
'Ticking' or repetitive clicking from the motor compartment?
Yes
Cell phone or other RF causing console glitches
Intentional or Intermittent E-stop disconnection
Loose wire connection
Damaged console cable
No
High belt/deck friction triggering overcurrent protection
Cell phone or other RF causing console glitches
Worn or damaged motor commutator or brushes/Other motor failure
Damaged console cable
Damage to rear roller
Other possible causes of speed issues to consider:
Belt speed calibration incorrect/not done
Stop operates as PAUSE when pressed once – resumes at earlier speed
Belt 'overshoots' expected speed when accelerating/starting from Pause – this is common & normal, especially with no user on belt
End of workout/workout includes automatic speed changes

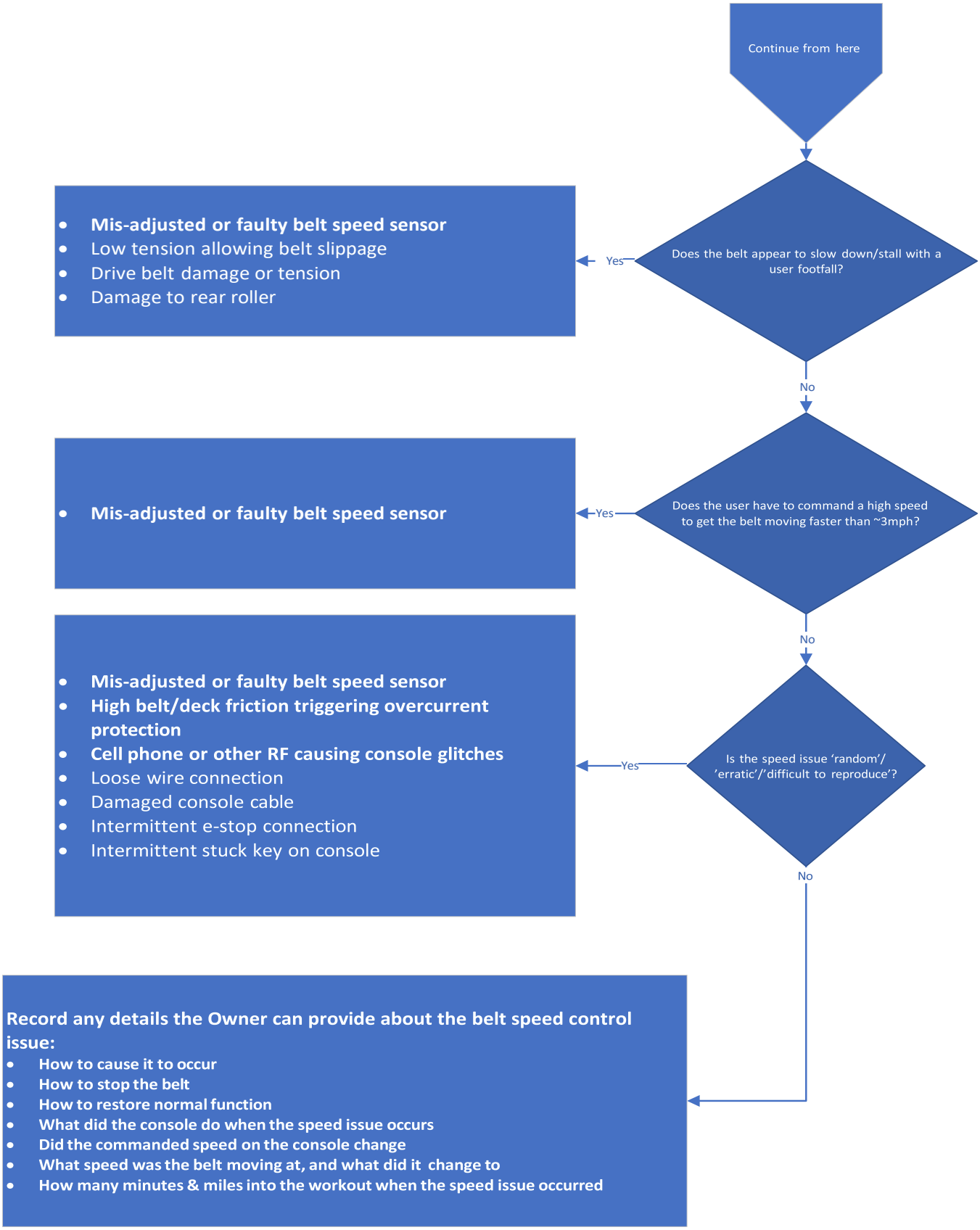
Continue from here
Does the belt appear to slow down/stall with a user footfall?
Yes
Mis-adjusted or faulty belt speed sensor
Low tension allowing belt slippage
Drive belt damage or tension
Damage to rear roller
No
Does the user have to command a high speed to get the belt moving faster than ~3mph?
Yes
Mis-adjusted or faulty belt speed sensor
No
Is the speed issue 'random'/ 'erratic'/'difficult to reproduce'?
Yes
Mis-adjusted or faulty belt speed sensor
High belt/deck friction triggering overcurrent protection
Cell phone or other RF causing console glitches
Loose wire connection
Damaged console cable
Intermittent e-stop connection
Intermittent stuck key on console
No
Record any details the Owner can provide about the belt speed control issue:
How to cause it to occur
How to stop the belt
How to restore normal function
What did the console do when the speed issue occurs
Did the commanded speed on the console change
What speed was the belt moving at, and what did it change to
How many minutes & miles into the workout when the speed issue occurred

Root Causes

All known possible root causes of belt speed control faults, in order of frequency:

1. Mis-adjusted or faulty belt speed sensor
2. High belt/deck friction triggering overcurrent protection
3. Cell phone or other RF causing console glitches
4. Worn or damaged motor commutator/brushes or other motor failure
5. Motor Control Board (MCB) failure
6. Damaged console cable/Console cable too short (after incline)
7. Loose wire connection
8. Intermittent Emergency Stop connection
9. Damage to rear roller
10. Low tension allowing belt slippage or Drive belt damage or tension
11. Treadmill or panel overcurrent breaker opening
12. Intermittent stuck key on console
13. Treadmill error codes
14. Treadmill slower after software update

Mis-adjusted or faulty belt speed sensor

T101-05, T101-07, TR5, TR3

The position of the magnetic speed sensor is extremely sensitive on the models listed above. Being too close or too far away from the magnet on the front roller can cause several possible indications:

- 'Jerky' or 'surging' belt speed
- Must command high speed (~6-8mph) before belt will move faster than moderate (~2-3mph) speed
- Error codes
- After calibration, the unit may function better but will show hesitation again after cycling power

To diagnose & correct this issue:

1. Disconnect power and remove the motor cover. Inspect the speed sensor, located adjacent to the front roller on the operator's left side. There should be approx. 5mm/0.2" gap between the sensor face and magnet on the front roller/pulley. The magnet on the roller should pass as near as possible to the center of the sensor. Adjust the sensor as necessary to meet this spec.
   See the service bulletin Erratic Treadmill Speed on the T101, TR3, or TR5 product page.

   This bracket is too close to the speed sensor:

   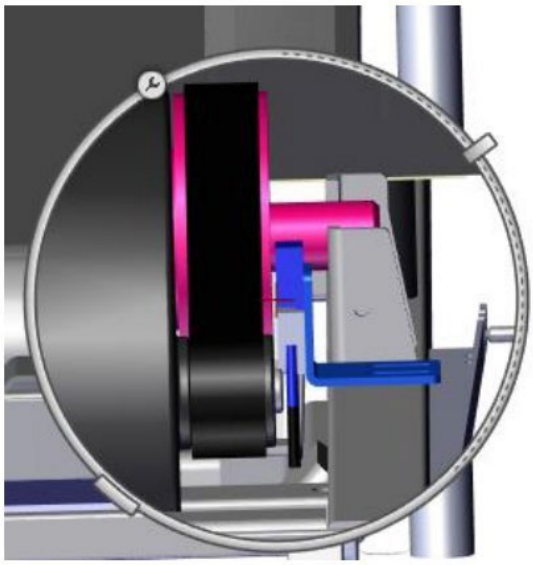

   This sensor is an adequate distance from the front roller:

   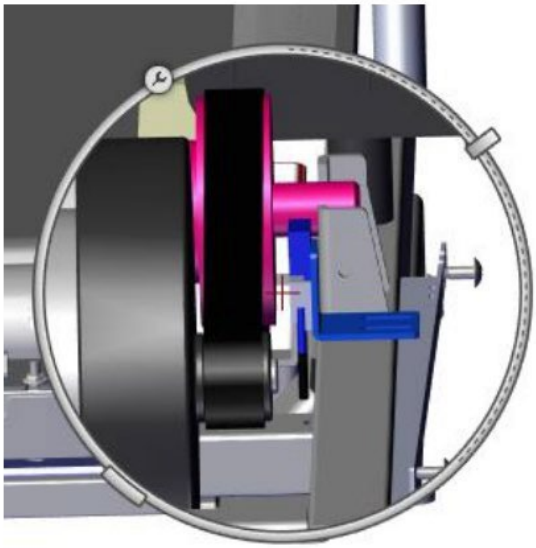

2. Confirm that the speed sensor is firmly connected to the MCB: 3-wire cable adjacent to the 9-wire console cable, on top of the MCB. Check the cable routing and that there is no damage to the cable.
3. Reinstall the motor cover and restore power. Complete the following steps to confirm the speed sensor is working properly:
   a. With the treadmill idle, hold Speed Down and Incline Up for ~3 seconds to access Engineering Mode.
   b. Use the Speed Up or Down buttons to navigate to ENG1 and press Enter.
   c. Step onto the running belt and place one hand on each side of the handlebars. Lean forward in a sled push stance. Push one foot backwards at a time to rotate the running

belt. The right display should show a number that increases as you push faster and 0 when the belt is stopped—this is the output of the speed sensor.

d. While standing on the side rails, press Speed Up to increase the number in the left display—this is the commanded speed signal. Press Start and the belt will start moving slowly. By setting the left display to the following values, the right display should read as indicated in the chart below:

TR5, TR3 TM1013, TM1012		T101-05* TM486, TM743	
Left	Right	Left	Right
1000	60	1000	81
2000	195	2000	217
3000	315	3000	342
4000	437	4000	466
5000	559	5000	591

Belt speed should change accordingly with the commanded speed. The right display should read out within 10% of these values and remain steady when the speed is not changing—remaining at 0 or fluctuating as little 10 points up or down could indicate that the speed sensor is out of adjustment, disconnected, or faulty.

**These values were measured on T101-05s with console software version 1.xx. Values may be different in different console software versions.*

High belt/deck friction triggering overcurrent protection

T101-05, T101-07, TR5, TR3

The MCB measures the motor current and triggers self-protection when the motor is drawing too much current. When this occurs, the belt will come to a stop but the console will continue operating the workout – counting time & distance and appearing to respond to user controls. Cycling power (switch on the front base or disconnecting the power cord) is necessary to restore normal function.

This issue can be difficult to diagnose because it may happen sporadically, depending on user weight, speed, incline, temperature, distance/time into workout, and many other factors.

To diagnose & correct this issue:

1. When the issue occurs, remove the motor cover, and examine the MCB **without disconnecting power or turning the power switch off**. If there is a RED LED illuminated on it, the MCB is in overcurrent self-protection. Reinstall the motor cover and cycle power. Note: This LED will reset when power is cycled. Confirm that the power remains on after the belt stop issue occurred when making this check.
2. Lubricate the belt & deck according to the instructions included in the treadmill Owner's Manual.
3. If the issue re-occurs, the belt & deck are likely worn beyond lubrication resolving. Replace the belt & deck.
4. If the issue continues to re-occur, the motor or MCB have likely been stressed to failure. Replace the motor first. If issues continue to occur, replace the MCB.

Cell phone or other RF causing console glitches

T101

Modern 4G & 5G cell phones can transmit with enough power to potentially cause console software glitches. Additionally, other transmitters have been observed to cause intermittent issues. Commonly, this will cause console display glitches – flickering, blinking, or displays off. Causing the running belt to stop completely, slow down/stop and then attempt to return to the expected speed, or speed up from the expected speed to some higher speed momentarily has also been observed. Additionally, the Stop button & speed controls on the console may not respond as expected.
This issue is difficult to diagnose with certainty, and frequently occurs intermittently or sporadically.
Best practices to prevent issues include:

1. **Update to the latest available software version**
2. Install the EMI Protection kit (ZMS4011056), following instructions in the EMI Shielding Kit for Speed Issues service bulletin (available on the T101-5 product page).
3. Ensure any cell phones near the console are in airplane mode.
4. Don't place a cell phone on the *lower* rack of the console – the *upper* reading rack is safer if your console has one.

Very similar symptoms can be found with an Emergency stop key making intermittent connection. See further details here.

Worn or damaged motor commutator/brushes or other motor failure

T101-05, T101-07, TR5, TR3

With the electrical power present in and many moving parts that make up the belt drive motor, normal wear can cause it to fail. This wear is accelerated by many factors including user weight, speed, incline, belt & deck friction, drive belt alignment, and lack of routine cleaning. Additionally, there are brushes within the motor that will wear out, and the commutator may need to be cleaned.

If the belt does not start moving due to a motor failure, the console may display an E-1 error code.

To diagnose & correct this issue:

1. Disconnect power and remove the motor cover. Stand on a siderail and use your foot to rotate the belt in the normal forward direction. Listen to the motor – any grinding, rubbing, or scraping noises from the motor are indicators of a motor issue.
    a. Consider that noises from other areas of the treadmill (drive belt, rollers, belt edges, etc.) may indicate adjustments may need to be made, such as running belt tension & centering, drive belt tracking, etc.
2. Inspect the motor leads (red, black, and green wires connected to the motor) for any signs of damage. Replace the motor if any damage is found.
3. **If a multimeter is available:** Conduct the following tests.
    a. Disconnect the red & black motor leads from the MCB and connect the leads to the multimeter. Polarity isn't important for this test.
    b. With the multimeter set to measure resistance, the motor should have a resistance of 0.9-1.6 ohms. Moving the belt slightly will cause this measurement to change dramatically – *do not* take this measurement while standing on or moving the belt, as any disturbance to the motor will cause this measurement to be unstable and could damage your meter.
    c. With the multimeter set to measure DC volts, turn the motor flywheel or move the belt (no faster than a walking pace on the belt). Turning the motor one direction should cause a positive voltage reading; turning the motor the other direction should cause a negative voltage reading. Both DC voltage readings should increase in magnitude when the motor is turned faster – specific readings cannot be noted without a repeatable way to measure/control how fast the motor is being turned.

    If either of these measurements fail these checks, the motor will need to be serviced or replaced. Refer to Inspecting and cleaning the motor for additional service information.
    If both tests pass, suspect the MCB.

4. **If no multimeter is available:** Conduct the following tests.
    a. Disconnect the red & black motor leads from the MCB.
    b. Acquire a battery, nominally 9-20 volts (for example 9 volt cell, cordless tool battery, car battery). Connecting the motor leads to the battery terminals, the motor should turn slowly (1-4 MPH). Do not stand on the belt for this test. Note – some cordless tool batteries have multiple terminals; confirm that the motor leads are connected to terminals where battery voltage is present.
    c. Have a helper turn the motor by hand, either directly by the motor flywheel or by pushing the belt. Touch & hold the metal spade connectors on the motor leads together while turning the motor is being turned - there should be a noticeable 'braking' force with the motor being harder to turn when the spade connectors are touching.

If the motor does not move when a battery is connected and no 'braking' force is felt connecting the leads to one another, the motor will need to be serviced or replaced. Refer to Inspecting and cleaning the motor for additional information.
If both of these tests pass, suspect the MCB.

5. See this addendum for additional details regarding inspection of the motor commutator and brushes.

Motor Control Board (MCB) failure

T101-05, T101-07, TR5, TR3

The MCB takes electricity from the outlet and converts it to power for the console, as well as translates control signals from the console to drive the belt & incline motors.

Issues caused by MCB faults can present in many ways, from belt speed control issues, incline issues, console power issues, or causing the treadmill or electrical panel breaker to open.

To test the MCB output to the belt drive motor **(multimeter required)**:

1. Disconnect power and remove the motor cover. Connect the leads of the multimeter to the red & black leads from the motor, connected to the MCB (multimeter leads can be inserted into the back of the plastic boot protecting the motor lead terminals). Set the meter to measure DC volts (auto-ranging or 200 VDC range).
2. Reapply power to the treadmill and start a manual workout. **Do not stand or walk on the belt for this test** – stand on the siderails or off the treadmill entirely. At the following commanded speeds, the multimeter should read approximately (+- 10%) the voltage noted below.

Model	Commanded speed (MPH)	Motor DC volts
T101, TR5, TR3	0.5	8.5
	3	34.7
	6	65.8
	10	107.3

Exact measurements will vary due to different calibration values and slight variations in motor construction but should be close. If the MCB can produce these voltages to the motor and speed control issues continue to appear, suspect the motor.

3. In some cases, it may not be possible to get the belt to move in a normal workout (E-1 error appears on console during a workout, for example). Hardware test mode can be used to work around possible issues.
   a. With the treadmill idle, hold Speed Down and Incline Up for ~3 seconds to access Engineering Mode.
   b. Use the Speed Up or Down buttons to navigate to ENG1 and press Enter.
   c. Press Go, and the belt may start moving slowly. Use the Speed Up keys to increase belt speed and the commanded speed signal in the Left display.

Model	Commanded speed setting (Left display)	Motor DC volts
T101	1000	11.6
	2000	26.2
	3000	39.4
	4000	52.4
	5000	65.4

   d. Cycle power to exit Hardware test mode.

Damaged console cable/console cable too short (after incline)

T101, TR5, TR3

The console cable is the link between the console and MCB, carrying console power and control signals between the different parts of the treadmill.

The console cable can be damaged in numerous ways: pinched or crushed by incorrect routing, kinked around sharp bends, or knicked when a fastener is tightened into it, for example. Damage to the console cable can cause any number of faults, including speed control, incline, or power issues. This root cause can be difficult to diagnose, as the symptoms may appear to change randomly or only appear intermittently. Additionally, some treadmills are assembled in such a way that the console cable can pull free from the MCB at high incline, immediately stopping the belt and powering off the console. Fortunately, close physical examination of the cable is usually able to locate damage, and with a replacement console cable, repair is straightforward.

T101 treadmill models use a 9-wire console cable. The following table describes the signal conducted on each wire, and possible symptoms that may appear with intermittent or severed continuity of that wire.

Pin Number	Signal label	Function & Signal direction	Symptom if cut/damaged
1	VCC	DC 12V power supply MCB to console	No console power If intermittent, console may power down and stop any ongoing workout
2	SGND	GROUND signal MCB to console	No console power If intermittent, console may power down and stop any ongoing workout Possible erratic speed or incline
3	COUNT	Incline position sensor MCB to console	Possible erratic incline movement Incline motor may move deck down past the limit switch, requiring maintenance to correct
4	UP	Incline up signal Console to MCB	Incline won't move up
5	ZERO	Incline motor zero switch MCB to console	Possibly no incline movement Incline motor may move deck down past the limit switch, requiring maintenance to correct
6	DOWN	Incline down signal Console to MCB	Incline won't move down
7	RPM	Belt speed sensor signal MCB to console	Likely E-1 error code if enabled Possibly 'ticking' sound from MCB Possibly unexpected speed change or stop
8	MR_SW	E-Stop signal Console to MCB	No belt movement or unexpected stop Likely E-1 error code if enabled Possibly 'ticking' sound from MCB
9	UPPWM	PWM (speed) signal Console to MCB	No belt movement or unexpected stop Likely E-1 error code if enabled

To inspect the console cable:

1. Disconnect power and remove the motor cover. Locate the socket on the MCB where the console cable connects and ensure that connection is secure.
2. Trace the console cable along its routing, paying special attention to any irregularities in the shape or size of the cable. Common areas where damage occurs are the base of the mast where the console leaves the motor compartment and turns up the mast, and the top of the mast where console mount bolts thread in. Removing one of the upper mast shrouds may aid this inspection.
3. Inspect any connectors where different sections of the console cable connect – typically there may be one at the top and bottom of one of the masts. Pull these connectors apart (being careful to open any locking tabs) and inspect that there are no bent pins (see image below) or debris in a socket. Carefully reassemble each connector.

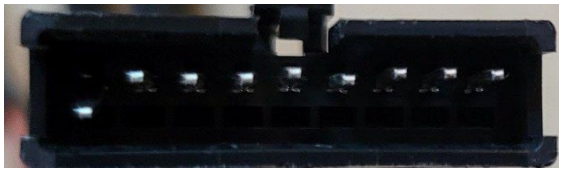

4. **If a multimeter is available:** Testing the console cable can also be done with a multimeter. Disconnect the console cable from the MCB and UCB (opening the console may be required to access the top end of the cable). Set the meter to measure continuity and test each conductor of the console cable end to end and for continuity to one another. Each conductor should have continuity, with no continuity between any of the conductors.

If any damage is found, replace the entire console cable. It can be challenging to properly route the console cable during replacement – be especially mindful of where damage was found on the existing console cable and consider routing options that avoid or prevent that damage in the future. A video of how to inspect your T101 communication cable can be found here. A video showing how to replace the communication cable in the T101 is also available.

Loose wire connection

Any treadmill model:

Electrical connectors can loosen and disconnect over time or with use. While a fully disconnected wire will usually cause some portion of the treadmill to repeatably not work at all, a loose or intermittently connected connector can cause unpredictable or erratic behavior.

Troubleshooting & diagnosing loose connectors frequently involves manually checking each connector. Many connectors support multiple wires, so disconnecting the connector and inspecting each terminal may be required.

Some connectors where substantial current is conducted may have visible signs that a good electrical connection is not being made – for example, discoloration or pitting caused by arcing. Additionally, loose connectors may emit a 'burned plastic' or 'ozone' smell as an early indicator.

If only one system of the treadmill is misbehaving intermittently, consider checking the connectors of that system – for instance, with erratic belt speed is observed, check the connection of the motor leads to the MCB.

If a connector is found to be loose or damaged, replace the cable or component with the damaged connector.

Intermittent Emergency Stop connection

Any treadmill model:
If the Emergency Stop key isn't making consistent electrical contact, several symptoms can appear. The vibration & movement of the console while a user walks/runs on the belt can be enough to cause intermittent e-stop connection problems.
Most obviously, the e-stop function may trigger unexpectedly, stopping the workout and requiring it to be re-started by the user. In this case, the treadmill will behave the same as if the E-stop had intentionally been engaged.

Some versions of console software will display the "Emergency Stop engaged" message appropriate for that model for ~2 seconds after detecting the E-stop trigger. This behavior can help to diagnose an intermittent connection of the E-stop key or wiring.
An intermittent connection can cause erratic belt speed, sometimes described as 'the belt moves, stops or slows, then resumes moving'. Finally, an intermittent connection can put the MCB into a state where it 'ticks' or clicks repeatedly, with or without belt movement.
To investigate an intermittent E-stop connection:

1. Remove the E-stop key and inspect the metal tab. It should be clean and have no corrosion – attempt to clean or replace if any found.
2. Look into the slot that the E-stop fits into. There shouldn't be any debris visible; there should be 4 small metal 'fingers' that need to make contact with the metal tab on the key. Replace if the tabs appear damaged.
3. Open the console and inspect the wire from the E-stop slot to the UCB. Confirm no damage, and that the connector is properly seated in its socket on the UCB.
4. Inspect the Console Cable for any damage. See that topic here for further information.

Similar symptoms may be observed if the console is experiencing EMI from a cell phone or other source. See further information here.

Damage to rear roller

Any treadmill model:
The rear roller can become bent or cracked during use. This may cause belt tensioning or centering issues, or prevent the belt from rolling over the roller smoothly. In the worst case, damage to the roller can prevent the belt from moving at all, eventually triggering overcurrent protection on the MCB, damage to the motor, or another MCB fault.
Diagnosing a damaged roller can commonly be done by inspection. Any noticeable irregularity in the roller (including under the belt), movement of some portion of the rear roller relative to the frame or other portions of the roller, or any resistance to smooth turning can indicate a roller failure. Replace the roller, being sure to tension & center the belt afterwards. See this video for further information on tensioning & centering the belt.

Low tension allowing belt slippage or drive belt damage

Any treadmill model

To function properly, the running belt must be properly tensioned and centered. If it is not, it may cause undue noise as it rubs to one side or may appear to 'stall' or 'hesitate' on each footfall. If the belt is very loose, it may not move at all with a user on the running surface.
Additionally, the drive belt from the motor to the front roller must also be tensioned and aligned. Similar symptoms can appear if this belt is not properly adjusted, although this drive belt is much less susceptible to inadvertent adjustment or wear than the running belt.
To diagnose a loose running belt:

1. Start a manual workout and set the speed to a comfortable walking pace.
2. 'Stomp' on the belt. If it hesitates, stalls, or comes to a stop, the running belt is likely inadequately tensioned.
3. Further diagnosis can be done by removing the motor cover and repeating the 'stomp' test above, while observing the pulley on the front roller. If both the motor and front roller continue turning at a steady speed and the belt doesn't, the running belt is inadequately tensioned.
4. When the running belt is properly tensioned, you should only be able to place a finger between the belt & deck up to the second knuckle. **Do not do this test with power applied.**
5. Refer to the "Treadmill Belt & Deck Guide" under General Maintenance or this video for detail on how to tension and center the running belt.

To diagnose a drive belt:

1. Disconnect power and remove the motor cover. Inspect the drive belt from the motor to the front roller pulley for cuts, abrasions, cracking, or any other sign of damage; replace if any found.
2. Check the alignment of the motor to the front roller pulley – the motor rotor and front roller should be on the same axis. Adjust the motor set bolts if necessary to correct.
3. Reapply power, start a manual workout, and set the belt speed to a walking pace. 'Stomp' on the belt, and observe the drive belt. If it stalls, hesitates, or slips on the motor shaft or front roller, the drive belt needs to be tensioned.
4. On models with a magnetic speed sensor (T101, TR5, TR3), a loose drive belt may cause an E-1 error to be displayed on the console, due to the belt not moving as expected.

Treadmill or panel overcurrent breaker opening

Any treadmill:
Some faults or high belt/deck friction can cause either the overcurrent breaker in the treadmill or the owner's electrical panel to open. Belt/Deck friction is typically the root cause, but a fault with the MCB, belt drive, or incline motors could also be found.
If the treadmill breaker opens, the treadmill will immediately lose power until the breaker is reset. On T101 models, there is a button on the lower front of the treadmill, adjacent to the power switch & power cord. If this button is 'popped out', the treadmill breaker has opened. Press the button inwards to reset the breaker.
To diagnose a treadmill that causes the unit breaker to open:

1. Consider whether the belt & deck have been properly lubricated or are worn. Review & follow lubrication instructions included in the treadmill Owner's Manual or Treadmill Belt & Deck Guide. Replace the belt & deck of either show signs of wear or problems reoccur.
2. Consider what the treadmill is doing when the breaker opens:
    a. If the breaker opens immediately when power is connected/switched on, the power input components and MCB should be suspected.
    b. If the breaker opens when an incline movement is commanded, the MCB or incline motor should be suspected. When inspecting the incline motor, confirm that the moving parts of the incline linkage all flex freely and are not seized or interfering with another part.
    c. If the breaker opens when the belt would normally start moving or during a workout, the belt drive motor and MCB should be suspected. Also consider that high belt/deck friction can cause this issue.

If the breaker in the electrical panel opens, the treadmill (and every other device on that circuit) will immediately lose power until the breaker is reset. It is important to remember that breakers are designed and installed to protect the wiring in the home/facility, not the devices powered by that circuit. As such, consider if there are other devices on the same circuit (especially high-power devices such as heaters, motors, pumps, computers): If both the treadmill and another device are drawing large amounts of power at the same time, there may not actually be any fault with the treadmill at all – just too much power being drawn through the breaker.
To diagnose a treadmill that's causing the panel breaker to open:

1. Disconnect every other device that also lost power when the breaker opened, reset the breaker, and test the treadmill again for any faulty behavior. Without the additional load on the breaker, the treadmill may not exhibit any faults.
2. Consider whether the belt & deck have been properly lubricated or are worn. Review & follow lubrication instructions included in the treadmill Owner's Manual or Treadmill Belt & Deck Guide (available under General Maintenance). Replace the belt & deck of either show signs of wear or problems reoccur.
3. Consider what the treadmill is doing when the breaker opens:
    a. If the breaker opens immediately when power is connected/switched on, the power input components and MCB should be suspected.
    b. If the breaker opens when an incline movement is commanded, the MCB or incline motor should be suspected. When inspecting the incline motor, confirm that the moving parts of the incline linkage all flex freely and are not seized or interfering with another part.
    c. If the breaker opens when the belt would normally start moving or during a workout, the belt drive motor and MCB should be suspected. Also consider that high belt/deck friction can cause this issue.

Intermittent stuck key on console

Any treadmill:
One or more of the keys on the console can fail, intermittently responding as though it was pressed without the user doing so. These issues can be very difficult to diagnose, since the fault can be so sporadic and difficult to reliably reproduce.

Diagnosis largely relies on the user being noticing consistencies in how the treadmill misbehaves, and then identifying which buttons detecting a press in error could cause that symptom. For example, if the speed control issue is reported as "when it occurs, the speed always sets to 8 MPH" may indicate that a key commanding that change could be stuck.

One common indicator of a stuck key is that when a key (other than the stuck key) is pressed, the console will beep indicating that it acknowledged the key press, but will not respond to what the button is commanding. Pressing the key that's stuck causes no beep, and can be used to help diagnose which key pad might be faulty. Further diagnosis can be done by opening the console, disconnecting all of the wires/ribbon/cables that go to a keypad from the UCB, and connecting them back one by one, checking for function each time a pad is reconnected. When the faulty behavior returns, a key on that pad is likely stuck. Replace the keypad.

Also, some treadmill models allow the speed to be changed multiple different ways: Quick-keys, rollers on grips, or Interval Keys. Confirm that the user isn't inadvertently commanding the speed change manually.

Treadmill error codes

T101-05, T101-07
Treadmills are able to detect some fault conditions and set an error code on the console, providing some assistance in diagnosis. Depending on the error code and particular treadmill model, the causes and solutions vary slightly.

E-1 error code

Error E-1 is displayed when the treadmill expects the running belt to be moving, but doesn't detect any movement signal from the speed sensor. There are multiple root causes or faults that can cause this error.

E-1 errors may occur more frequently immediately after updating the console software. If these errors are appearing and the software was recently updated, refer to Treadmill issues after Software Update for specific troubleshooting.

To troubleshoot & diagnose an E-1 error:

1. Disconnect power and remove the motor cover. Manually check the console cable for damage.
2. Confirm that the speed sensor is connected to the MCB. Inspect the speed sensor wire for damage or kinks.
    a. T101, TR5, TR3: Inspect the location of the speed sensor, and adjust if necessary.
3. Inspect the motor leads (black and red wires connecting to the motor) for any damage. Confirm that the motor leads are properly & firmly connected to the MCB.
4. Inspect the MCB for any signs of damaged or burned components.

5. Stand on the running belt; hold the handlebar and push the belt at a walking pace. The belt should rotate freely, with no unusual noises or grinding. If anything abnormal is noted, consider Worn or damaged motor commutator/brushes or other motor failure, Damage to rear roller, or Low tension allowing belt slippage or Drive belt damage or tension.

E-2 error code

Error E-2 is displayed when the treadmill detects that the belt is moving slower than it is being commanded to by the console.
The most common cause for this error is lack of lubrication between the belt & deck, with the increased friction preventing the treadmill from being able to attain the commanded speed. Lubricate the belt & deck, following the instructions included in the Owner's Manual.
If the issue continues to occur, the console may be getting faulty data from the belt speed sensor. Refer to the section Mis-adjusted or faulty belt speed sensor for details on how to inspect & adjust the speed sensor. Replacing the speed sensor is sometimes needed, but getting it adjusted properly usually fixes the problem.

E-b error code

Error E-b is displayed when the running belt speed signal from the speed sensor is higher than the expected range for the commanded speed.
There are two common causes of this error code – User walking at high incline causing the belt to turn faster than the console expects it to, and faulty data from the belt speed sensor.
Refer to the section Mis-adjusted or faulty belt speed sensor for details on how to inspect & adjust the speed sensor. Replacing the speed sensor is sometimes needed, but getting it adjusted properly usually fixes the problem.
If this error continues to appear after speed sensor adjustment or replacement, there is not much else that can be done as a repair – the user just may not be able to operate the treadmill at the speed & incline settings where the error occurs.

Treadmill issues after Software Update

If the user reports new speed control issues after updating the console software, this could be a result of intentional features intended to improve the overall safety of the treadmill. Treadmills that are used by heavier people (>200lbs) or treadmills that are older (>1 year) or haven't had routine lubrication of the belt & deck are more susceptible to these kinds of issues.

Three distinct issues are known to occur within a short period of use after a software update, and are usually accompanied by an E-1 error code on the display. Depending on which symptom appears indicates what adjustments or parts replacements should be done. Troubleshoot the treadmill by referring to the topics following each symptom.

1. **No belt movement** at all when starting a workout (this should be very rare if the only change is updated console software)
   Mis-adjusted or faulty belt speed sensor
   Damaged console cable
2. Belt starts moving, then stops promptly (3-10 seconds), with or without a user on the running belt
   Mis-adjusted or faulty belt speed sensor

Damaged console cable

3. Belt starts moving, then stops after some length of time (1-30 minutes) **with a user on the running belt**
   High belt/deck friction
   Low tension allowing belt slippage or Drive belt damage or tension
4. Belt starts moving and treadmill can be used normally, but speed 'feels' faster or slower than expected
   Calibrate the speed sensor

Note: If the treadmill worked as expected prior to updating the console software, the motor & MCB are both likely in good operating condition and should not be immediately suspected after updating software.

Updating console software

Updating the console software to the latest version is critical to ensuring the latest bug-fixes and features of the treadmill are installed.

Software can be found for download at this web address.

Refer to the document in the "Additional Files" column for specific instructions on how to configure the USB update and install it to the treadmill console.

Calibrating the speed sensor

Follow the procedure below to calibrate the speed sensor. *Important: Do not stand on the treadmill belt—stand on the side rails or the floor.*

1. Hold Speed Down and Incline Up for about 3 seconds to access the Engineering Mode.
2. Use the Speed Up or Down buttons to navigate to ENG2.
3. Press Enter, and then press Start. The belt should begin moving automatically and increase speed on its own. Some other combination of Enter and Start may be required on some models.
4. When the belt stops and the console beeps 3 times, calibration is complete. If calibration takes more than 10 minutes to complete, the speed sensor may be mis-adjusted or faulty.

Inspecting and cleaning the motor (Technician only)

Inspection and cleaning of the motor internals & wear parts can help diagnose or correct a motor issue.

1. Disconnect power and remove the motor cover, if not already done.
2. Inspect & clean the commutator:
    a. Remove the round plastic cap from the motor. If the commutator is copper-colored and shiny with only minor residue from the brushes, it is in good condition. If the commutator is dirty, black, or has noticeable scratches/pitting, it may need to be stoned/cleaned to remove residue.
    b. If a commutator stone is available, insert it into the round hole perpendicularly to the commutator and apply firm pressure. Spin the motor flywheel by hand 3-5 times to remove carbon deposits from the commutator.
    c. Use compressed air to blow any residue from inside the motor.
    d. Replace the cap, reapply power and run the treadmill at 3 MPH for 15 minutes.
    e. Repeat points a.-e. here until the commutator appears clean & shiny or a normal wear pattern appears.

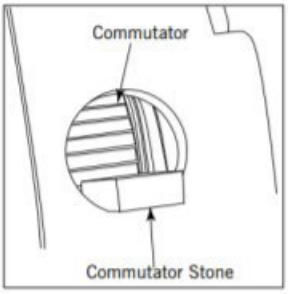

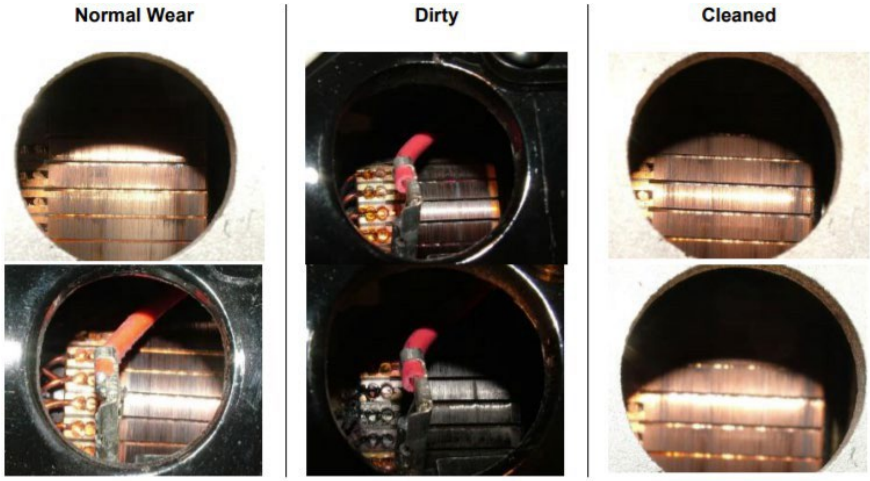

3. Removing the motor brushes for inspection is most easily done with the motor already removed from the treadmill. Once the motor is removed, inspect the brushes:
    a. Access a brush by removing a square cap from the motor. Note the orientation of any locating tabs or features during removal.
    1. *CAUTION:* the brushes are held in place by springs – ensure no small parts are lost during further disassembly.

b. Depress the silver brush spring holder towards the rotor, and slide it away from the flywheel side of the motor. Carefully allow the brush spring to push the holder away from the brush and out of the motor, collecting the holder and spring as they come out.
c. The brush can be pulled from its socket. Inspect it for even wear, no signs of damage or arcing, and sufficient remaining length for re-use. Clean or replace brush as necessary.
d. Consider using compressed air to blow any debris out of the brush socket area.
e. Reassemble the brush into its socket, followed by the spring and spring holder. Repeat steps a.-d. on the other brush.

Change Log

Version	Date	Details	By
1	2022-8-01	Original Version	Jake Sleppy
1.1	2022-10-06	Added Treadmill Slower after Software Update section & Changelog	Maxwell Anderson
1.2	2023-1-11	Updated Treadmill Issues after Software Update section. Added reference to above section in E-1 Error.	Jake Sleppy